MITSUBISHI ELECTRIC

SPLIT-TYPE, HEAT PUMP AIR CONDITIONERS

August 2014

No. OCB567

PARTS CATALOG R410A

Outdoor unit
[Model Name]

PUZ-HA42NKA

[Service Ref.]

PUZ-HA42NKA

Note:
- RoHS compliant products have <G> mark on the spec name plate.

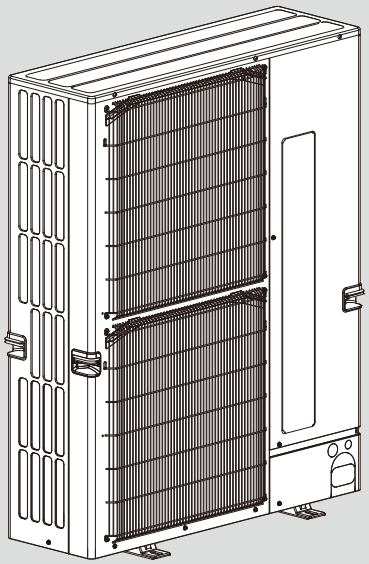

CONTENTS

1. RoHS PARTS LIST 2

SERVICE MANUAL (OCH567)

33223

Mr.SLIM

1 RoHS PARTS LIST

FUNCTIONAL AND ELECTRICAL PARTS
PUZ-HA42NKA

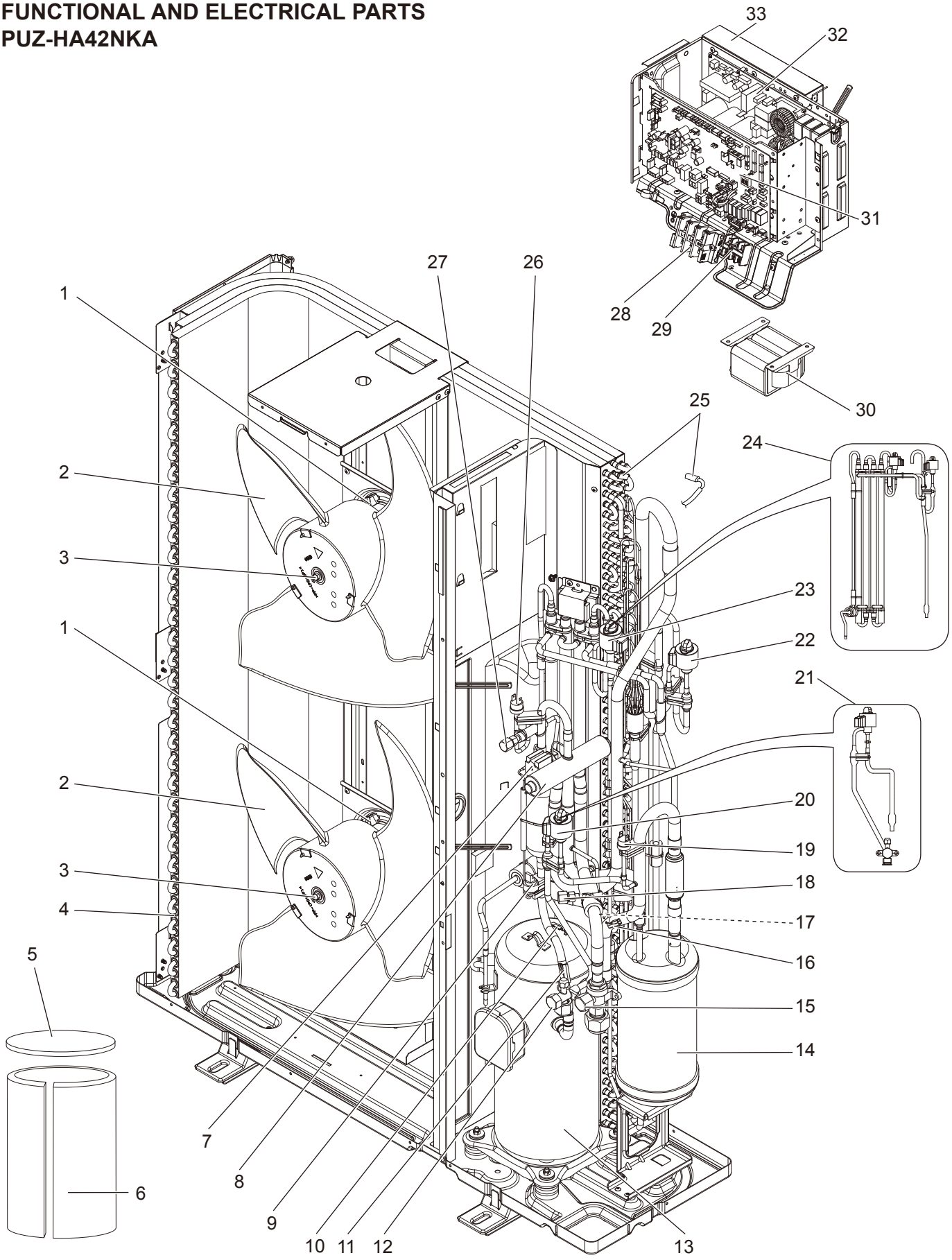

OCB567

RoHS PARTS LIST

Parts numbers that are circled are not shown in the figure.

No.	RoHS	Parts No.	Parts Name	Specification	Q'ty/unit	Remarks (Drawing No.)	Wiring Diagram Symbol
					PUZ-HA42NKA		
1	G	T7W A00 221	FAN MOTOR		2		MF1, 2
2	G	R01 E14 115	PROPELLER FAN		2		
3	G	R01 E09 097	NUT		2		
4	G	T7W E73 408	HEAT EXCHANGER		1		
5	G	R01 A57 602	COMP FELT (TOP)		1		
6	G	R01 A70 602	COMP FELT (BODY)		1		
7	G	T7W E69 242	SOLENOID COIL <4-WAY VALVE>		1		21S4
8	G	R01 E40 403	4-WAY VALVE		1		
9	G	R01 E07 208	HIGH PRESSURE SENSOR		1		63HS
10	G	R01 H90 202	THERMISTOR	Comp. Surface	1		TH34
11	G	R01 E22 201	THERMISTOR	Dischange	1		TH4
12	G	T7W E04 410	STOP VALVE	3/8	1		
13	G	T97 442 077	COMPRESSOR	ANB42FJTMT	1	Including RUBBER MOUNTS	MC
14	G	R01 E60 440	POWER RECEIVER		1		
15	G	R01 E12 410	BALL VALVE	5/8	1		
16	G	R01 H32 202	THERMISTOR	Suction	1		TH32
17	G	R01 H00 202	THERMISTOR	Liquid	1		TH3
18	G	R01 E12 413	CHARGE PLUG		1		
19	G	R01 E00 209	LOW PRESSURE SWITCH		1		63L
20	G	R01 H13 242	LEV COIL	UKV type	1	Connector: Red	LEV-B
21	G	T7W E51 401	LEV-B ASSY		1	For LEV B, Including coil & STV	
22	G	R01 H26 242	LEV COIL	UKV type	1	Connector: White	LEV-A
23	G	R01 H14 242	LEV COIL	UKV type	1	Connector: Blue	LEV-C
24	G	T7W E50 401	LEV ASSY HIC		1	For LEV A & C, Including coil	
25	G	R01 E94 202	THERMISTOR	2-Phase Pipe, Ambient	1		TH6, 7
26	G	T7W E07 208	HIGH PRESSURE SWITCH		1		63H
27	G	R01 E13 413	CHARGE PLUG		1		
28	G	T7W 603 246	TERMINAL BLOCK	3P(L1, L2, GR)	1		TB1
29	G	R01 E19 246	TERMINAL BLOCK	3P(S1, S2, S3)	1		TB2
30	G	T7W E23 259	REACTOR		1		DCL
31	G	T7W GA0 315	CONTROLLER CIRCUIT BOARD		1		C.B.
32	G	T7W AD0 323	POWER CIRCUIT BOARD		1		P.B.
33	G	R01 A10 371	HEAT SINK		1		
34	G	R01 E14 239	FUSE	250V 6.3V	4		F1,2,3,4
35	G	R01 E34 510	LEAD ASSY COMP		1		

RoHS PARTS LIST

STRUCTURAL PARTS
PUZ-HA42NKA

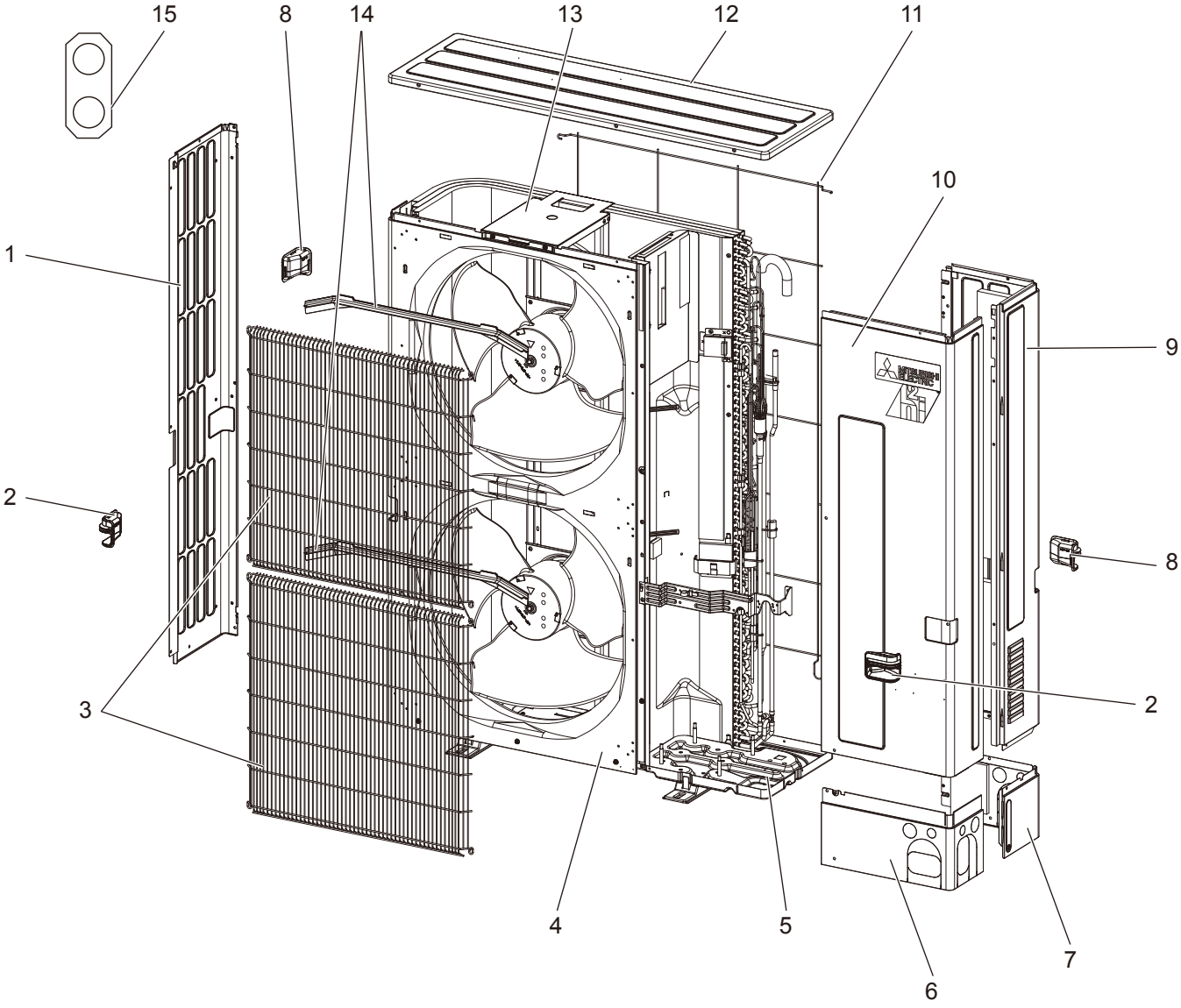

RoHS PARTS LIST

No.	RoHS	Parts No.	Parts Name	Specification	Q'ty/unit	Remarks (Drawing No.)	Wiring Diagram Symbol
					PUZ-HA42NKA		
1	G	R01 E30 662	SIDE PANEL (L)		1		
2	G	R01 E05 655	HANDLE (FRONT)		2		
3	G	R01 E73 691	FAN GRILLE		2		
4	G	R01 E23 668	FRONT PANEL		1		
5	G	R01 E45 686	BASE ASSY		1		
6	G	R01 E35 658	COVER PANEL (FRONT)		1		
7	G	R01 E36 658	COVER PANEL (REAR)		1		
8	G	R01 E06 655	HANDLE (REAR)		2		
9	G	T7W E30 661	SIDE PANEL (R)		1		
10	G	T7W E19 668	SERVICE PANEL		1		
11	G	R01 E10 698	REAR GUARD		1		
12	G	R01 E36 641	TOP PANEL		1		
13	G	R01 E60 130	MOTOR SUPPORT		1		
14	G	R01 E02 631	ICE GUARD		2		
15	G	T7W E04 617	CONDUIT PLATE		1		

Mr.SLIM

MITSUBISHI ELECTRIC CORPORATION

HEAD OFFICE : TOKYO BLDG., 2-7-3, MARUNOUCHI, CHIYODA-KU, TOKYO 100-8310, JAPAN

©Copyright 2014 MITSUBISHI ELECTRIC CORPORATION
Distributed in Aug. 2014 No.OCB567
Made in Japan

New publication, effective Aug. 2014
Specifications are subject to change without notice.