Changes for the Better

MITSUBISHI ELECTRIC

SPLIT-TYPE, HEAT PUMP AIR CONDITIONERS
SPLIT-TYPE, AIR CONDITIONERS

March 2014
No.OCB481
REVISED EDITION-B

PARTS CATALOG R410A

Outdoor unit [Model Names]	[Service Ref.]	
PUZ-A18NHA4	PUZ-A18NHA4	PUZ-A18NHA4R1
PUZ-A24NHA4	PUZ-A24NHA4	
PUZ-A30NHA4	PUZ-A30NHA4	
PUZ-A36NHA4	PUZ-A36NHA4	
PUZ-A42NHA4	PUZ-A42NHA4	
PUZ-A18NHA4-BS	PUZ-A18NHA4-BS	PUZ-A18NHA4R1-BS
PUZ-A24NHA4-BS	PUZ-A24NHA4-BS	
PUZ-A30NHA4-BS	PUZ-A30NHA4-BS	
PUZ-A36NHA4-BS	PUZ-A36NHA4-BS	
PUZ-A42NHA4-BS	PUZ-A42NHA4-BS	
PUY-A12NHA4	PUY-A12NHA4	PUY-A12NHA4R1
PUY-A18NHA4	PUY-A18NHA4	PUY-A18NHA4R1
PUY-A24NHA4	PUY-A24NHA4	
PUY-A30NHA4	PUY-A30NHA4	
PUY-A36NHA4	PUY-A36NHA4	
PUY-A42NHA4	PUY-A42NHA4	
PUY-A12NHA4-BS	PUY-A12NHA4-BS	PUY-A12NHA4R1-BS
PUY-A18NHA4-BS	PUY-A18NHA4-BS	PUY-A18NHA4R1-BS
PUY-A24NHA4-BS	PUY-A24NHA4-BS	
PUY-A30NHA4-BS	PUY-A30NHA4-BS	
PUY-A36NHA4-BS	PUY-A36NHA4-BS	
PUY-A42NHA4-BS	PUY-A42NHA4-BS	

Revision:
- Modified the parts list table in page 8 in REVISED EDITION-B.
- Updated some parts numbers to the latest.
- Some descriptions have been also modified.

- Please void OCB481 REVISED EDITION-A.

Note:
- RoHS compliant products have <G> mark on the spec name plate.

CONTENTS

1. RoHS PARTS LIST.....2

SERVICE MANUAL (OCH481)

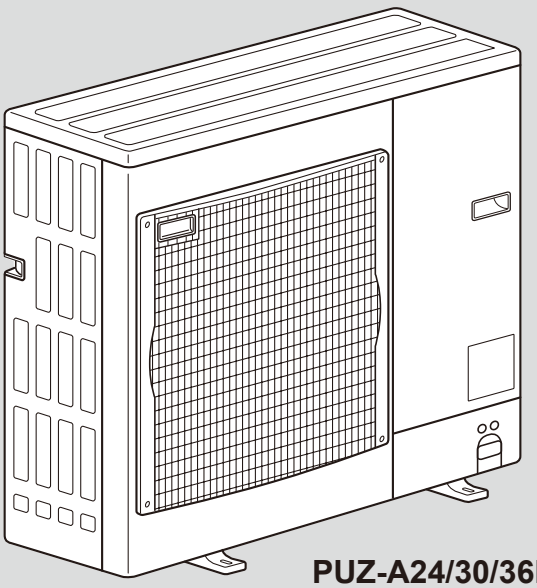

PUZ-A24/30/36NHA4
PUY-A24/30/36NHA4

33223

Mr.SLIM™

1 RoHS PARTS LIST

FUNCTIONAL AND ELECTRICAL PARTS

PUZ-A18NHA4	**PUZ-A18NHA4-BS**
PUZ-A18NHA4R1	**PUZ-A18NHA4R1-BS**
PUY-A12NHA4	**PUY-A12NHA4-BS**
PUY-A12NHA4R1	**PUY-A12NHA4R1-BS**
PUY-A18NHA4	**PUY-A18NHA4-BS**
PUY-A18NHA4R1	**PUY-A18NHA4R1-BS**

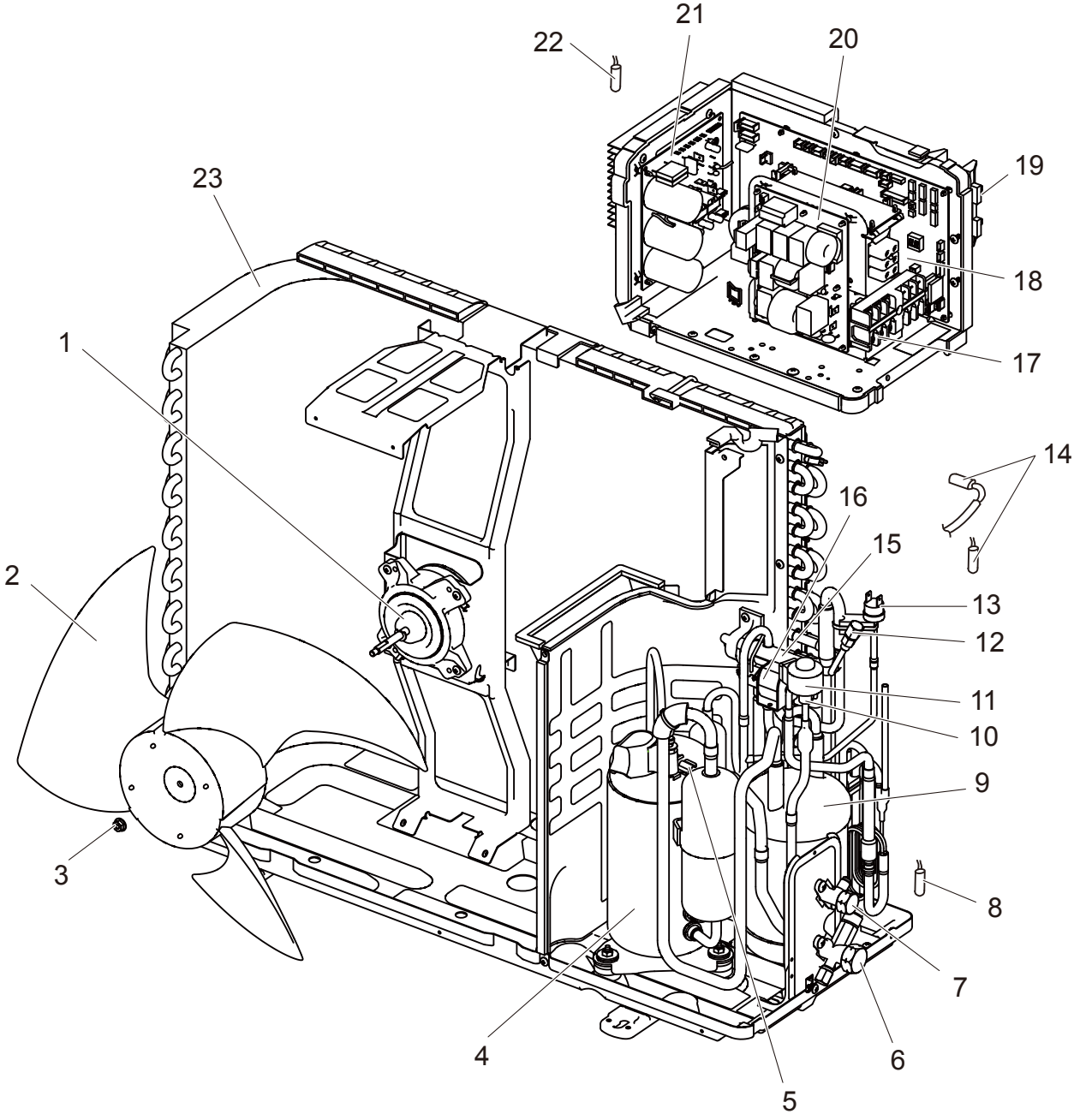

RoHS PARTS LIST

Parts number that is circled is not shown in the figure.

No.	RoHS	Parts No.	Parts Name	Specification	Q'ty/unit												Wiring Diagram Symbol
					PUZ-A18NHA4	PUZ-A18NHA4R1	PUY-A12NHA4	PUY-A12NHA4R1	PUY-A18NHA4	PUY-A18NHA4R1	PUZ-A18NHA4-BS	PUZ-A18NHA4R1-BS	PUY-A12NHA4-BS	PUY-A12NHA4R1-BS	PUY-A18NHA4-BS	PUY-A18NHA4R1-BS	
1	G	R01 E52 221	FAN MOTOR		1	1	1	1	1	1	1	1	1	1	1	1	MF1
2	G	R01 E07 115	PROPELLER FAN		1	1	1	1	1	1	1	1	1	1	1	1	
3	G	R01 E08 097	NUT		1	1	1	1	1	1	1	1	1	1	1	1	
4	G	T92 577 280	COMPRESSOR	SNB130FQCM1 Including RUBBER MOUNT	1	1	1	1	1	1	1	1	1	1	1	1	MC
5	G	T7W E10 201	THERMISTOR(SHELL)		1	1	1	1	1	1	1	1	1	1	1	1	TH32
6	G	T7W E05 410	STOP VALVE (GAS)	1/2	1	1	1	1	1	1	1	1	1	1	1	1	
7	G	R01 E27 410	STOP VALVE (LIQUID)	1/4	1	1	1	1	1	1	1	1	1	1	1	1	
8	G	R01 N01 202	THERMISTOR (OUTDOOR PIPE)				1	1					1	1			TH3
	G	R01 E98 202	THERMISTOR (OUTDOOR PIPE)		1	1			1	1	1	1			1	1	TH3
9	G	T7W E22 440	ACCUMULATOR		1	1	1	1	1	1	1	1	1	1	1	1	
10	G	R01 E75 401	EXPANSION VALVE		1	1	1	1	1	1	1	1	1	1	1	1	
11	G	R01 E36 242	LINER EXPANSION VALVE COIL		1	1	1	1	1	1	1	1	1	1	1	1	LEV-A
12	G	R01 E12 403	CHARGE PLUG		1		1		1		1		1		1		
	G	R01 E12 413	CHARGE PLUG			1		1		1		1		1		1	
13	G	T7W E07 208	HIGH PRESSURE SWITCH		1	1	1	1	1	1	1	1	1	1	1	1	63H
14	G	R01 E97 202	THERMISTOR (OUTDOOR 2-PHASE PIPE, OUTDOOR)		1	1	1	1	1	1	1	1	1	1	1	1	TH6,7
15	G	R01 E30 403	4-WAY VALVE		1	1					1	1					
16	G	T7W E33 242	SOLENOID COIL (4-WAY VALVE)		1	1					1	1					21S4
17	G	T7W E39 716	TERMINAL BLOCK	6P (L1,L2,GR,S1,S2,S3)	1	1	1	1	1	1	1	1	1	1	1	1	TB1
18	G	T7W F22 315	CONTROLLER CIRCUIT BOARD		1	1	1	1	1	1	1	1	1	1	1	1	C.B.
19	G	R01 E22 259	REACTOR		1	1	1	1	1	1	1	1	1	1	1	1	ACL
20	G	T7W E20 346	NOISE FILTER		1	1	1	1	1	1	1	1	1	1	1	1	N.F.
21	G	T7W E80 313	POWER CIRCUIT BOARD		1	1	1	1	1	1	1	1	1	1	1	1	P.B.
22	G	R01 E99 202	THERMISTOR (HEATSINK)		1	1	1	1	1	1	1	1	1	1	1	1	TH8
23	G	R01 H33 408	HEAT EXCHANGER				1	1					1	1			
	G	T7W E57 408	HEAT EXCHANGER		1				1		1				1		
	G	R01 H35 408	HEAT EXCHANGER			1				1		1				1	
24	G	R01 E14 239	FUSE	6.3A 250V	4	4	4	4	4	4	4	4	4	4	4	4	F1,2,3,4

RoHS PARTS LIST

FUNCTIONAL PARTS

PUZ-A24NHA4	**PUY-A24NHA4**	**PUZ-A24NHA4-BS**	**PUY-A24NHA4-BS**
PUZ-A30NHA4	**PUY-A30NHA4**	**PUZ-A30NHA4-BS**	**PUY-A30NHA4-BS**
PUZ-A36NHA4	**PUY-A36NHA4**	**PUZ-A36NHA4-BS**	**PUY-A36NHA4-BS**

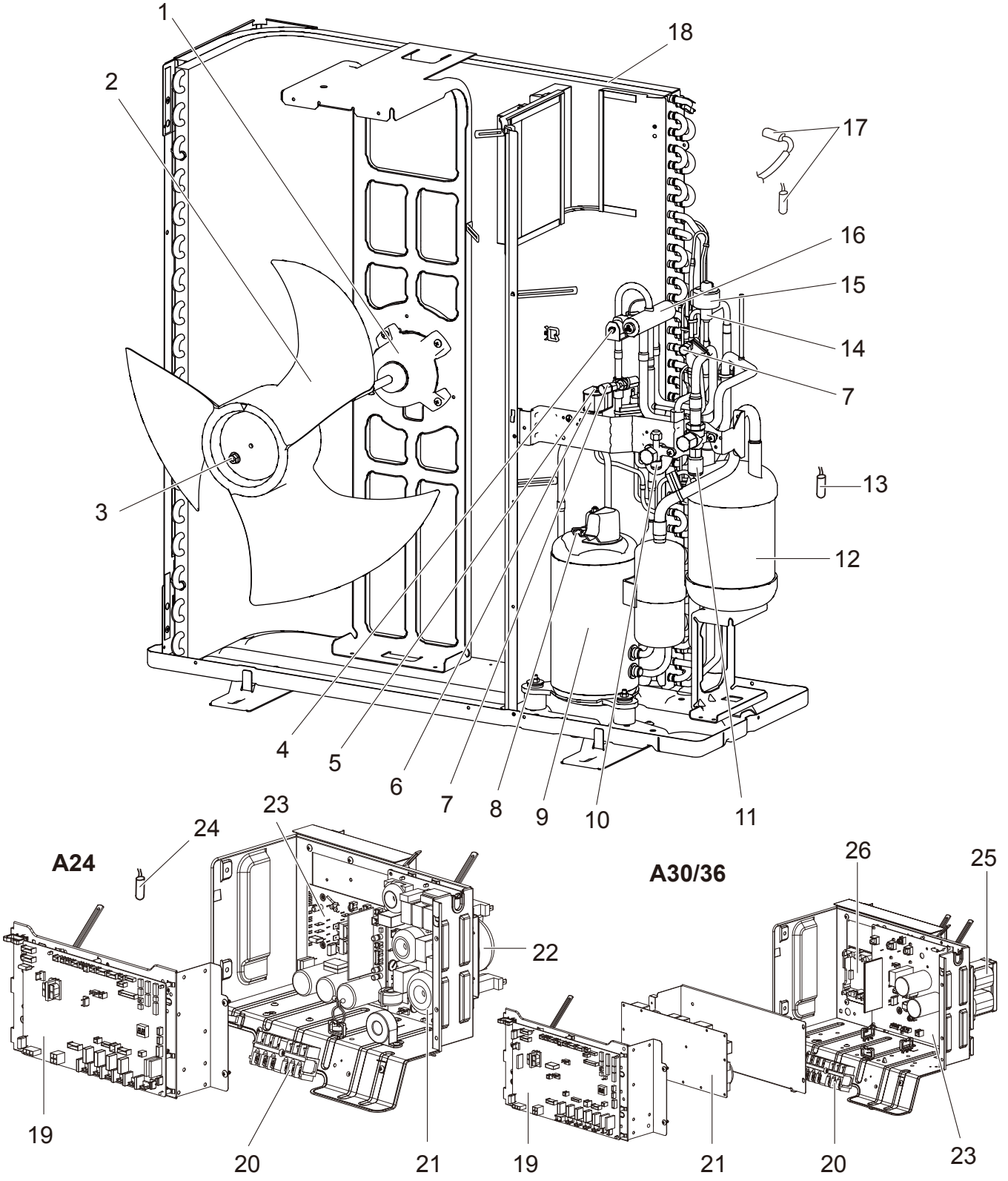

OCB481B

RoHS PARTS LIST

Parts numbers that are circled are not shown in the figure.

No.	RoHS	Parts No.	Parts Name	Specification	Q'ty/unit												Wiring Diagram Symbol
					PUZ-A24NHA4	PUZ-A30NHA4	PUZ-A36NHA4	PUY-A24NHA4	PUY-A30NHA4	PUY-A36NHA4	PUZ-A24NHA4-BS	PUZ-A30NHA4-BS	PUZ-A36NHA4-BS	PUY-A24NHA4-BS	PUY-A30NHA4-BS	PUY-A36NHA4-BS	
1	G	T7W E27 763	FAN MOTOR		1	1	1	1	1	1	1	1	1	1	1	1	MF1
2	G	R01 E12 115	PROPELLER FAN		1	1	1	1	1	1	1	1	1	1	1	1	
3	G	R01 E09 097	NUT		1	1	1	1	1	1	1	1	1	1	1	1	
4	G	T7W E20 242	SOLENOID COIL <4-WAY VALVE>		1	1	1				1	1	1				21S4
5	G	R01 E13 428	BYPASS VALVE		1	1	1	1	1	1	1	1	1	1	1	1	
6	G	T7W E19 242	SOLENOID COIL <BYPASS VALVE>		1	1	1	1	1	1	1	1	1	1	1	1	SV
7	G	R01 E12 413	CHARGE PLUG		2	2	2	1	1	1	2	2	2	1	1	1	
	G	T7W E10 413	CHARGE PLUG					1	1	1				1	1	1	
8	G	T7W E11 201	THERMISTOR (SHELL)		1	1	1	1	1	1	1	1	1	1	1	1	TH32
9	G	T92 508 801	COMPRESSOR	TNB220FLHM Including RUBBER MOUNT	1	1	1	1	1	1	1	1	1	1	1	1	MC
10	G	T7W E04 410	STOP VALVE	3/8	1	1	1	1	1	1	1	1	1	1	1	1	
11	G	R01 E12 411	BALL VALVE	5/8	1	1	1	1	1	1	1	1	1	1	1	1	
12	G	R01 E57 440	ACCUMULATOR		1	1	1	1	1	1	1	1	1	1	1	1	
13	G	R01 N03 202	THERMISTOR (OUTDOOR PIPE)		1			1			1			1			TH3
	G	R01 N01 202	THERMISTOR (OUTDOOR PIPE)			1	1		1	1		1	1		1	1	TH3
14	G	R01 H22 401	EXPANSION VALVE		1	1	1	1	1	1	1	1	1	1	1	1	
15	G	R01 E50 242	LINER EXPANSION VALVE COIL		1	1	1	1	1	1	1	1	1	1	1	1	LEV-A
16	G	R01 E28 403	4-WAY VALVE		1	1	1				1	1	1				
17	G	R01 E94 202	THERMISTOR (OUTDOOR 2-PHASE PIPE, OUTDOOR)		1	1	1	1	1	1	1	1	1	1	1	1	TH6,7
18	G	T7W E59 408	HEAT EXCHANGER		1			1			1			1			
	G	T7W E60 408	HEAT EXCHANGER			1	1		1	1		1	1		1	1	
19	G	T7W F22 315	CONTROLLER CIRCUIT BOARD		1			1			1			1			C.B.
	G	T7W F00 315	CONTROLLER CIRCUIT BOARD			1	1		1	1		1	1		1	1	C.B.
20	G	T7W E40 716	TERMINAL BLOCK	6P(L1,L2,GR,S1,S2,S3)	1	1	1	1	1	1	1	1	1	1	1	1	TB1
21	G	T7W E21 346	NOISE FILTER CIRCUIT BOARD		1			1			1			1			N.F.
	G	R01 E22 346	NOISE FILTER CIRCUIT BOARD			1	1		1	1		1	1		1	1	N.F.
22	G	R01 E33 259	REACTOR		1			1			1			1			ACL
23	G	T7W E39 313	POWER CIRCUIT BOARD		1			1			1			1			P.B.
	G	T7W E47 313	POWER CIRCUIT BOARD			1	1		1	1		1	1		1	1	P.B.
24	G	R01 E99 202	THERMISTOR (HEATSINK)		1	1	1	1	1	1	1	1	1	1	1	1	TH8
25	G	T7W E24 259	REACTOR			1	1		1	1		1	1		1	1	DCL
26	G	R01 E07 233	ACT MODULE			1	1		1	1		1	1		1	1	ACTM
27	G	T7W E07 208	HIGH PRESSURE SWITCH		1	1	1	1	1	1	1	1	1	1	1	1	63H
28	G	R01 E14 239	FUSE	6.3A 250V	4	4	4	4	4	4	4	4	4	4	4	4	F1,2,3,4

RoHS PARTS LIST

FUNCTIONAL PARTS

PUZ-A42NHA4	**PUZ-A42NHA4-BS**
PUY-A42NHA4	**PUY-A42NHA4-BS**

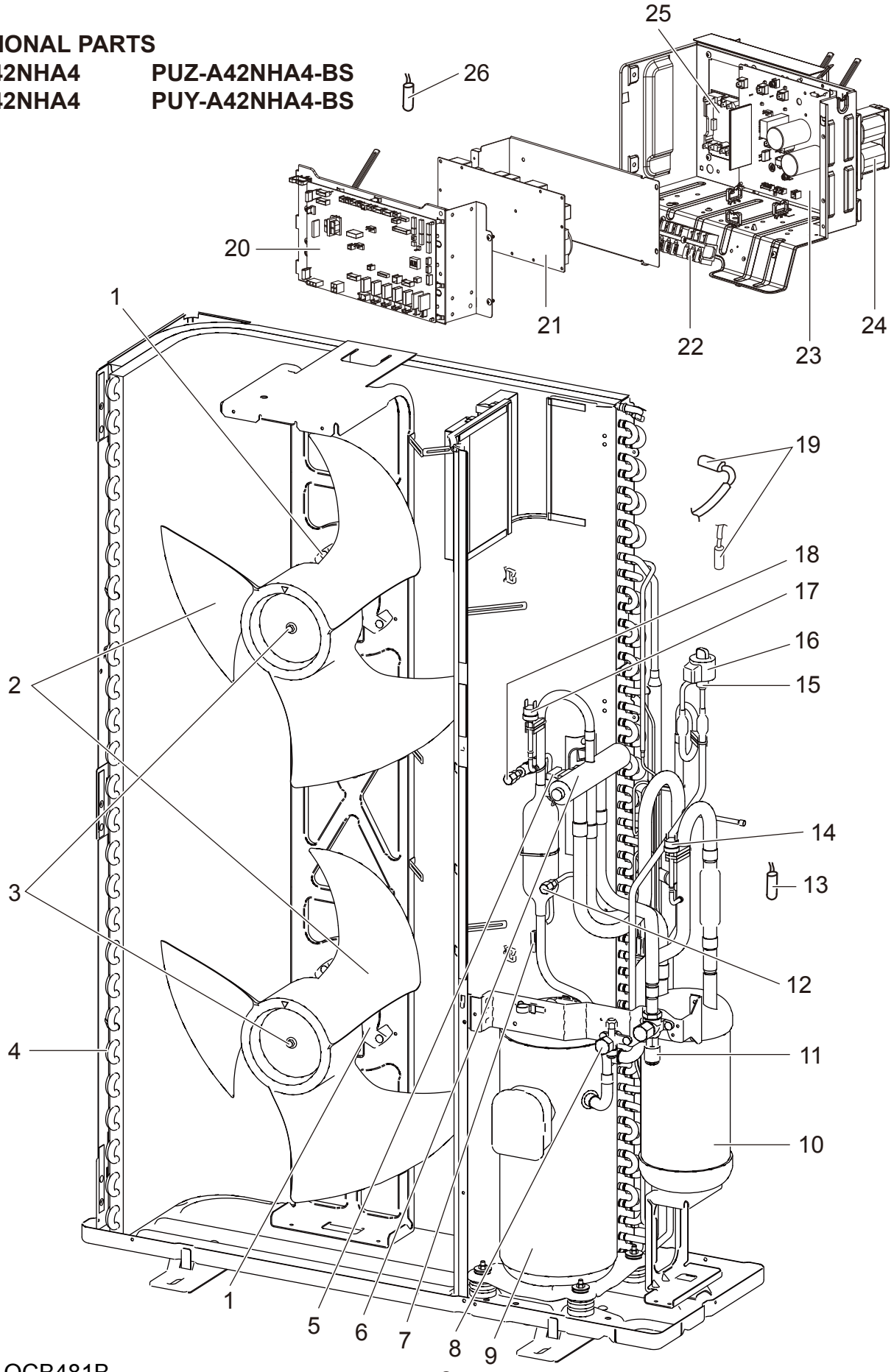

OCB481B

RoHS PARTS LIST

Parts numbers that are circled are not shown in the figure.

No.	RoHS	Parts No.	Parts Name	Specification	Q'ty/unit				Wiring Diagram Symbol
					PUZ-A42NHA4	PUY-A42NHA4	PUZ-A42NHA4-BS	PUY-A42NHA4-BS	
1	G	T7W E27 763	FAN MOTOR		2	2	2	2	MF1,2
2	G	R01 E12 115	PROPELLER FAN		2	2	2	2	
3	G	R01 E09 097	NUT		2	2	2	2	
4	G	T7W E61 408	HEAT EXCHANGER		1	1	1	1	
5	G	T7W E21 242	SOLENOID COIL <4-WAY VALVE>		1		1		21S4
6	G	T7W E05 403	4-WAY VALVE		1		1		
7	G	R01 E14 201	THERMISTOR (DISCHARGE)		1	1	1	1	TH4
8	G	T7W E04 410	STOP VALVE	3/8	1	1	1	1	
9	G	T97 415 778	COMPRESSOR	ANV33FDPMT Including RUBBER MOUNT	1	1	1	1	MC
10	G	R01 E58 440	ACCUMULATOR		1	1	1	1	
11	G	R01 E12 411	BALL VALVE	5/8	1	1	1	1	
12	G	R01 E13 413	CHARGE PLUG		1	1	1	1	
13	G	R01 H00 202	THERMISTOR (OUTDOOR PIPE)		1	1	1	1	TH3
14	G	R01 E00 209	LOW PRESSURE SWITCH		1	1	1	1	63L
15	G	R01 H20 401	EXPANSION VALVE		1	1	1	1	
16	G	R01 E50 242	LINEAR EXPANSION VALVE COIL		1	1	1	1	LEV-A
17	G	T7W E07 208	HIGH PRESSURE SWITCH		1	1	1	1	63H
18	G	T7W E10 413	CHARGE PLUG		1	1	1	1	
19	G	R01 E94 202	THERMISTOR (OUTDOOR 2-PHASE PIPE, OUTDOOR)		1	1	1	1	TH6,7
20	G	T7W F01 315	CONTROLLER CIRCUIT BOARD		1	1	1	1	C.B.
21	G	R01 E22 346	NOISE FILTER CIRCUIT BOARD		1	1	1	1	N.F.
22	G	T7W E40 716	TERMINAL BLOCK	6P(L1,L2,GR,S1,S2,S3)	1	1	1	1	TB1
23	G	R01 E65 313	POWER CIRCUIT BOARD		1	1	1	1	P.B.
24	G	T7W E24 259	REACTOR		1	1	1	1	DCL
25	G	R01 E07 233	ACTIVE FILTER MODULE		1	1	1	1	ACTM
26	G	R01 E99 202	THERMISTOR (HEATSINK)		1	1	1	1	TH8
27	G	R01 E20 254	MAIN SMOOTHING CAPACITOR		1	1	1	1	CB
28	G	R01 E14 239	FUSE	6.3A 250V	4	4	4	4	F1,2,3,4

RoHS PARTS LIST

STRUCTURAL PARTS

PUZ-A18NHA4
PUZ-A18NHA4R1
PUY-A12NHA4
PUY-A12NHA4R1
PUY-A18NHA4
PUY-A18NHA4R1
PUZ-A18NHA4-BS
PUZ-A18NHA4R1-BS
PUY-A12NHA4-BS
PUY-A12NHA4R1-BS
PUY-A18NHA4-BS
PUY-A18NHA4R1-BS

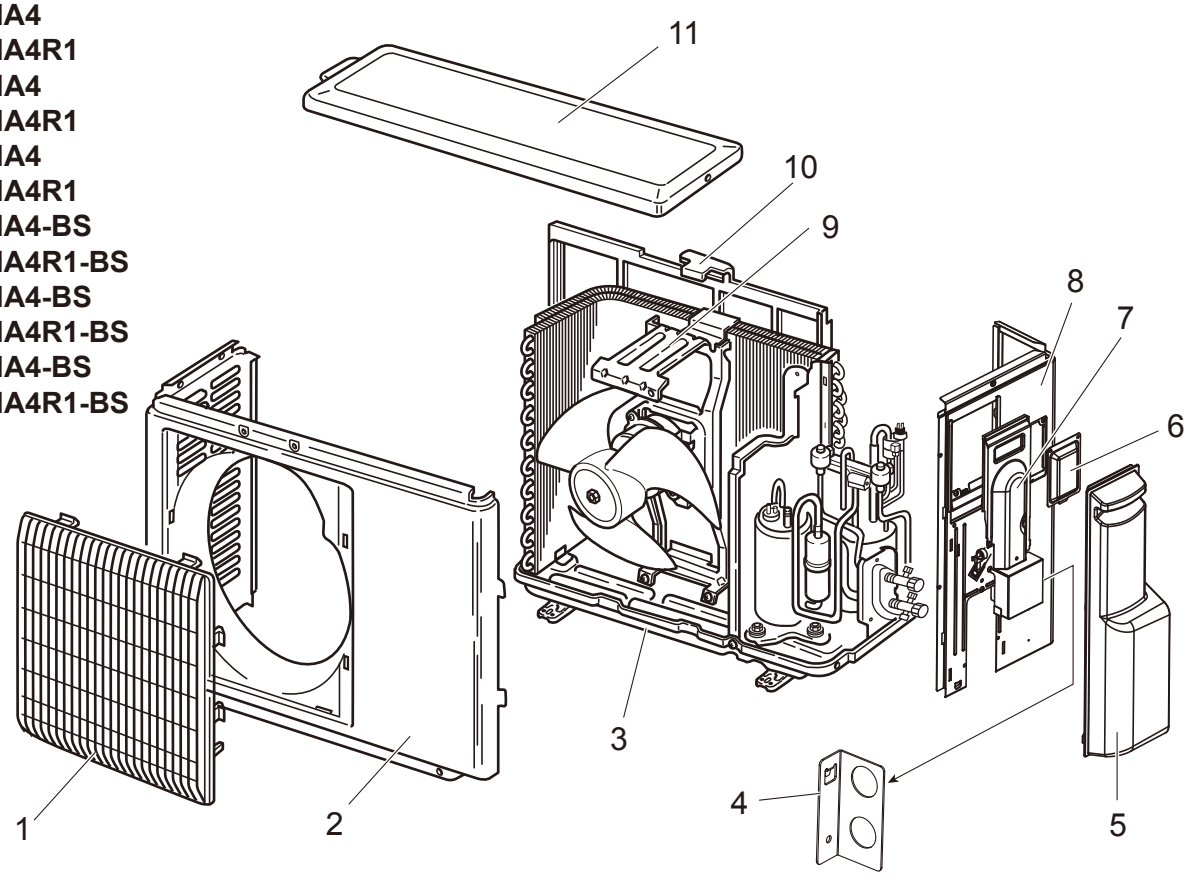

No.	RoHS	Parts No.	Parts Name	Q'ty/unit											
				PUZ-A18NHA4	PUZ-A18NHA4R1	PUY-A12NHA4	PUY-A12NHA4R1	PUY-A18NHA4	PUY-A18NHA4R1	PUZ-A18NHA4-BS	PUZ-A18NHA4R1-BS	PUY-A12NHA4-BS	PUY-A12NHA4R1-BS	PUY-A18NHA4-BS	PUY-A18NHA4R1-BS
1	G	R01 E30 691	GRILLE	1	1	1	1	1	1	1	1	1	1	1	1
2	G	R01 E25 668	FRONT PANEL	1	1	1	1	1	1	1	1	1	1	1	1
3	G	R01 E34 686	BASE ASSY	1		1		1		1		1		1	
	G	R01 E48 686	BASE ASSY		1		1		1		1		1		1
4	G	T7W E00 617	CONDUIT PLATE	1	1	1	1	1	1	1	1	1	1	1	1
5	G	T7W E03 667	SERVICE PANEL	1	1	1	1	1	1	1	1	1	1	1	1
6	G	R01 E01 518	SERVICE PANEL (FOR CHARGE PLUG)	1	1	1	1	1	1	1	1	1	1	1	1
7	G	T7W E00 649	CORD COVER	1	1	1	1	1	1	1	1	1	1	1	1
8	G	T7W E08 682	REAR PANEL	1	1	1	1	1	1	1	1	1	1	1	1
9	G	R01 E32 130	MOTOR SUPPORT			1	1					1	1		
	G	R01 E52 130	MOTOR SUPPORT	1	1			1	1	1	1			1	1
10	G	R01 E03 684	CONDENSER NET			1	1					1	1		
	G	R01 E02 684	CONDENSER NET	1	1			1	1	1	1			1	1
11	G	T7W E05 641	TOP PANEL	1	1	1	1	1	1	1	1	1	1	1	1

RoHS PARTS LIST

STRUCTURAL PARTS

PUZ-A24NHA4
PUZ-A30NHA4
PUZ-A36NHA4
PUY-A24NHA4
PUY-A30NHA4
PUY-A36NHA4
PUZ-A24NHA4-BS
PUZ-A30NHA4-BS
PUZ-A36NHA4-BS
PUY-A24NHA4-BS
PUY-A30NHA4-BS
PUY-A36NHA4-BS

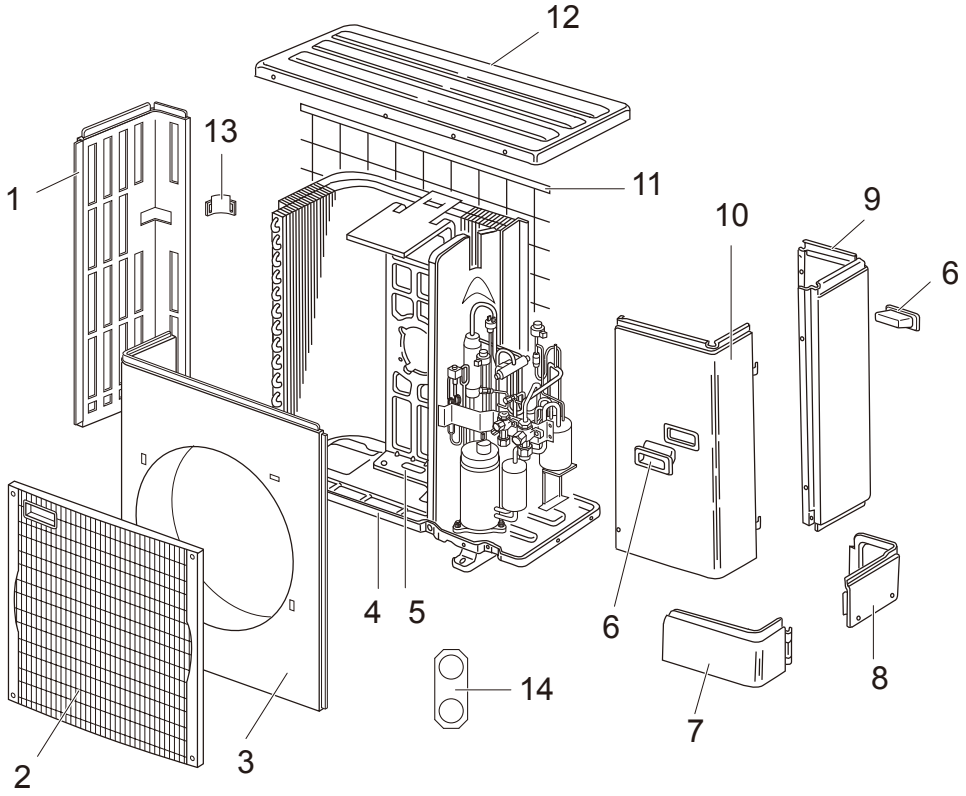

No.	RoHS	Parts No.	Parts Name	Q'ty/unit											
				PUZ-A24NHA4	PUZ-A30NHA4	PUZ-A36NHA4	PUY-A24NHA4	PUY-A30NHA4	PUY-A36NHA4	PUZ-A24NHA4-BS	PUZ-A30NHA4-BS	PUZ-A36NHA4-BS	PUY-A24NHA4-BS	PUY-A30NHA4-BS	PUY-A36NHA4-BS
1	G	R01 E19 662	SIDE PANEL (L)	1	1	1	1	1	1	1	1	1	1	1	1
2	G	T7W E03 691	FAN GRILLE	1	1	1	1	1	1	1	1	1	1	1	1
3	G	T7W E05 667	FRONT PANEL	1	1	1	1	1	1	1	1	1	1	1	1
4	G	R01 E33 686	BASE ASSY	1	1	1	1	1	1	1	1	1	1	1	1
5	G	R01 E12 130	MOTOR SUPPORT	1	1	1	1	1	1	1	1	1	1	1	1
6	G	R01 E01 655	HANDLE	2	2	2	2	2	2	2	2	2	2	2	2
7	G	R01 E40 658	COVER PANEL (FRONT)	1	1	1	1	1	1	1	1	1	1	1	1
8	G	R01 E24 658	COVER PANEL (REAR)	1	1	1	1	1	1	1	1	1	1	1	1
9	G	R01 E05 661	SIDE PANEL (R)	1	1	1	1	1	1	1	1	1	1	1	1
10	G	T1W E18 668	SERVICE PANEL	1	1	1	1	1	1	1	1	1	1	1	1
11	G	R01 E06 698	REAR GUARD	1	1	1	1	1	1	1	1	1	1	1	1
12	G	R01 E29 641	TOP PANEL	1	1	1	1	1	1	1	1	1	1	1	1
13	G	R01 E02 655	HANDLE	1	1	1	1	1	1	1	1	1	1	1	1
14	G	T7W E01 617	CONDUIT PLATE	1	1	1	1	1	1	1	1	1	1	1	1

RoHS PARTS LIST

STRUCTURAL PARTS
PUZ-A42NHA4
PUY-A42NHA4
PUZ-A42NHA4-BS
PUY-A42NHA4-BS

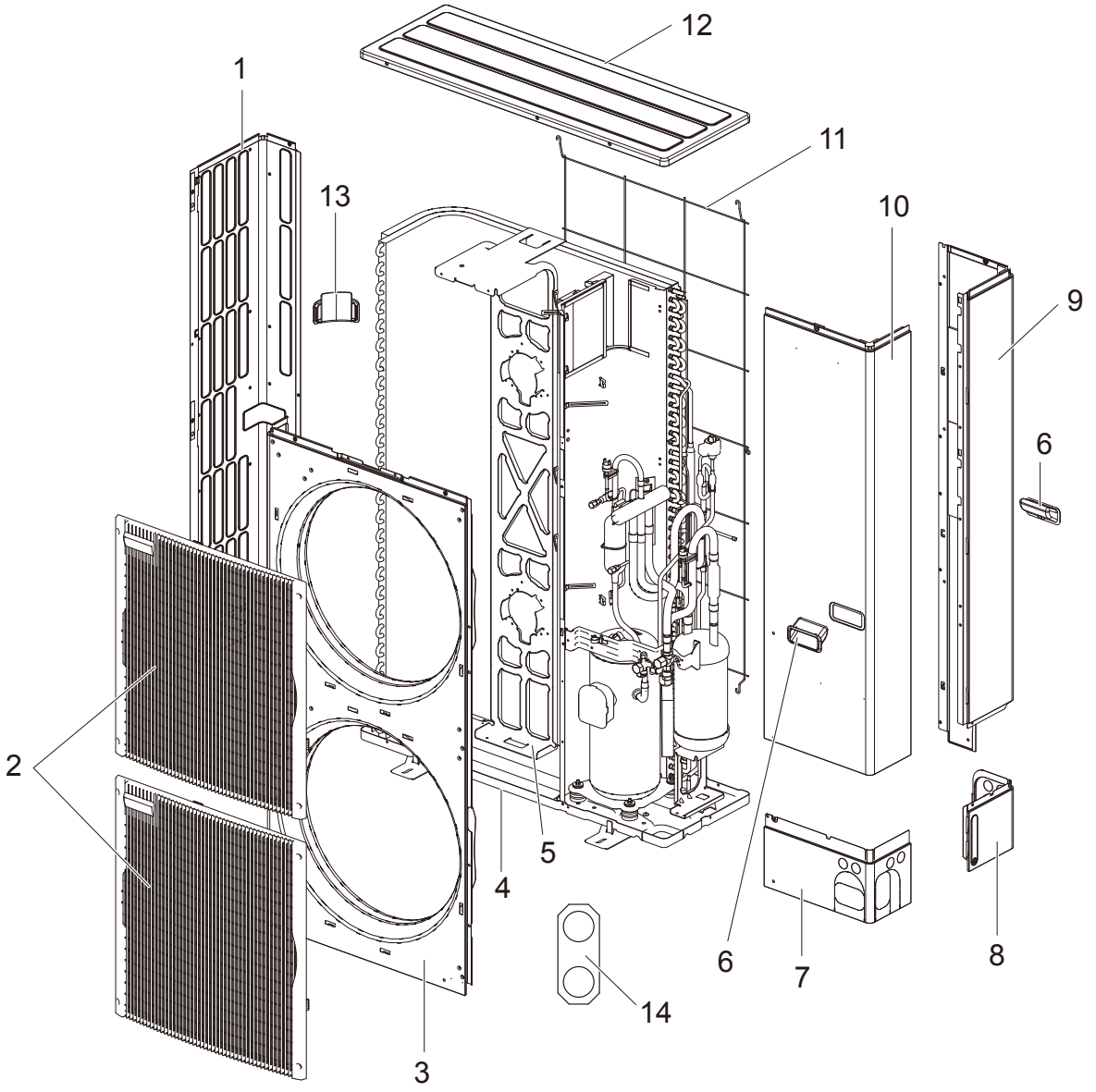

RoHS PARTS LIST

No.	RoHS	Parts No.	Parts Name	Q'ty/unit				Wiring Diagram Symbol	Recom-mended Q,ty
				PUZ-A42NHA4	PUY-A42NHA4	PUZ-A42NHA4-BS	PUY-A42NHA4-BS		
1	G	R01 E33 662	SIDE PANEL (L)	1	1	1	1		
2	G	T7W E03 691	FAN GRILLE	2	2	2	2		
3	G	T7W E06 667	FRONT PANEL	1	1	1	1		
4	G	R01 E26 686	BASE ASSY	1	1	1	1		
5	G	R01 E19 130	MOTOR SUPPORT	1	1	1	1		
6	G	R01 E01 655	HANDLE	2	2	2	2		
7	G	R01 E13 658	COVER PANEL (FRONT)	1	1	1	1		
8	G	R01 E24 658	COVER PANEL (REAR)	1	1	1	1		
9	G	R01 E34 661	SIDE PANEL (R)	1	1	1	1		
10	G	T7W E08 668	SERVICE PANEL	1	1	1	1		
11	G	R01 E07 698	REAR GUARD	1	1	1	1		
12	G	R01 E29 641	TOP PANEL	1	1	1	1		
13	G	R01 E02 655	HANDLE	1	1	1	1		
14	G	T7W E01 617	CONDUIT PLATE	1	1	1	1		

Mr.SLIM™

MITSUBISHI ELECTRIC CORPORATION
HEAD OFFICE : TOKYO BLDG., 2-7-3, MARUNOUCHI, CHIYODA-KU, TOKYO 100-8310, JAPAN

©Copyright 2010 MITSUBISHI ELECTRIC CORPORATION
Distributed in Mar. 2014 No.OCB481 REVISED EDITION-B
Distributed in Jul. 2012 No.OCB481 REVISED EDITION-A
Distributed in Nov. 2010 No.OCB481
Made in Japan

New publication, effective Mar. 2014
Specifications are subject to change without notice.