MITSUBISHI ELECTRIC

SPLIT-TYPE, HEAT PUMP AIR CONDITIONERS
SPLIT-TYPE, AIR CONDITIONERS

August 2015

PARTS CATALOG R410A

No. OCB577
REVISED EDITION-A

Outdoor unit [Model Name]	[Service Ref.]
PUZ-A18NHA6	PUZ-A18NHA6
PUZ-A24NHA6	PUZ-A24NHA6
PUZ-A30NHA6	PUZ-A30NHA6
PUZ-A36NHA6	PUZ-A36NHA6
PUZ-A42NHA6	PUZ-A42NHA6
PUZ-A18NHA6-BS	PUZ-A18NHA6-BS
PUZ-A24NHA6-BS	PUZ-A24NHA6-BS
PUZ-A30NHA6-BS	PUZ-A30NHA6-BS
PUZ-A36NHA6-BS	PUZ-A36NHA6-BS
PUZ-A42NHA6-BS	PUZ-A42NHA6-BS
PUY-A12NHA6	PUY-A12NHA6
PUY-A18NHA6	PUY-A18NHA6
PUY-A24NHA6	PUY-A24NHA6
PUY-A30NHA6	PUY-A30NHA6
PUY-A36NHA6	PUY-A36NHA6
PUY-A42NHA6	PUY-A42NHA6
PUY-A12NHA6-BS	PUY-A12NHA6-BS
PUY-A18NHA6-BS	PUY-A18NHA6-BS
PUY-A24NHA6-BS	PUY-A24NHA6-BS
PUY-A30NHA6-BS	PUY-A30NHA6-BS
PUY-A36NHA6-BS	PUY-A36NHA6-BS
PUY-A42NHA6-BS	PUY-A42NHA6-BS

Revision:
- Changed the parts number for CONTROLLER CIRCUIT BOARD in page 9 in REVISED EDITION-A.
- Some descriptions have been modified.

- Please void OCB577.

Note:
- RoHS compliant products have <G> mark on the spec name plate.

CONTENTS

1. RoHS PARTS LIST.....2

SERVICE MANUAL (OCH577)

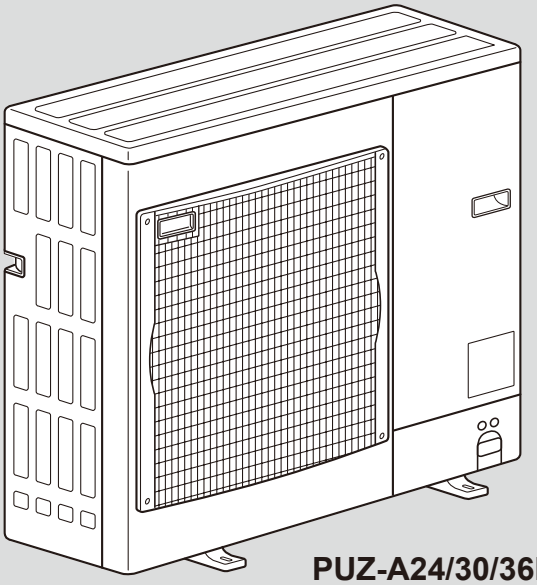

PUZ-A24/30/36NHA6
PUY-A24/30/36NHA6

Mr.SLIM

1 RoHS PARTS LIST

FUNCTIONAL AND ELECTRICAL PARTS

PUZ-A18NHA6	**PUZ-A18NHA6-BS**
PUY-A12NHA6	**PUY-A12NHA6-BS**
PUY-A18NHA6	**PUY-A18NHA6-BS**

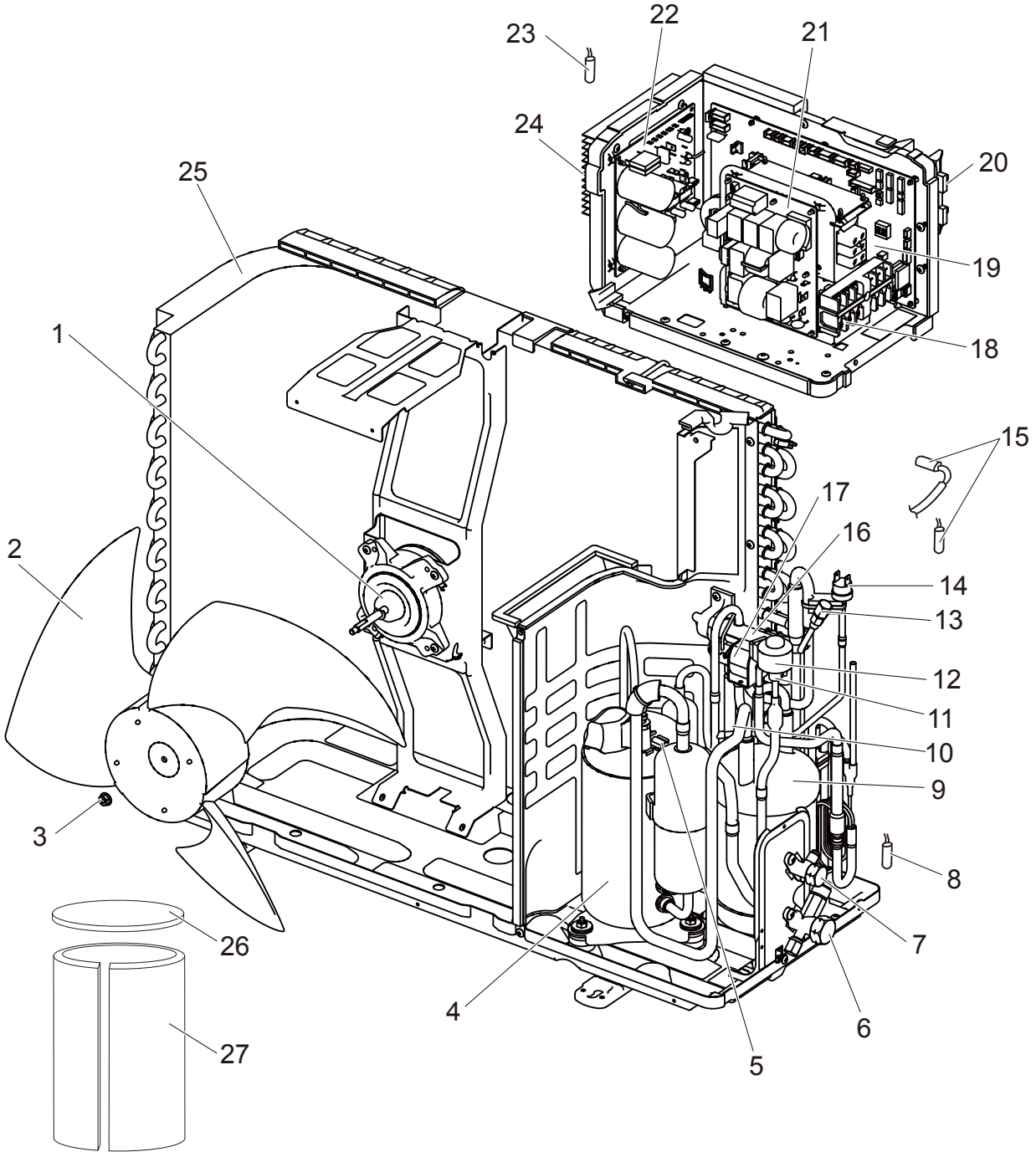

RoHS PARTS LIST

Parts numbers that are circled are not shown in the figure.

No.	RoHS	Parts No.	Parts Name	Specification	Q'ty/unit						Remarks	Wiring Diagram Symbol
					PUZ-A18NHA6	PUY-A12NHA6	PUY-A18NHA6	PUZ-A18NHA6-BS	PUY-A12NHA6-BS	PUY-A18NHA6-BS		
1	G	R01 E52 221	FAN MOTOR		1	1	1	1	1	1		MF1
2	G	R01 E07 115	PROPELLER FAN		1	1	1	1	1	1		
3	G	R01 E08 097	NUT		1	1	1	1	1	1		
4	G	T92 577 280	COMPRESSOR	SNB130FQCM1	1	1	1	1	1	1	Including RUBBER MOUNT	MC
5	G	T7W E10 201	THERMISTOR	Comp. surface	1	1	1	1	1	1		TH32
6	G	T7W E05 410	STOP VALVE (GAS)	1/2	1	1	1	1	1	1		
7	G	R01 E27 410	STOP VALVE (LIQUID)	1/4	1	1	1	1	1	1		
8	G	R01 N01 202	THERMISTOR	Liquid		1			1			TH3
	G	R01 E98 202	THERMISTOR	Liquid	1		1	1		1		TH3
9	G	T7W E22 440	ACCUMULATOR		1	1	1	1	1	1		
10	G	T7W E51 202	THERMISTOR	Suction	1	1	1	1	1	1		TH33
11	G	T7W E67 401	LEV-A ASSY		1	1	1	1	1	1	Including LEV COIL and STRAINER	
12	G	R01 E36 242	LEV COIL		1	1	1	1	1	1	CONNECTOR: WHITE	LEV-A
13	G	R01 E12 413	CHARGE PLUG		1	1	1	1	1	1		
14	G	T7W E07 208	HIGH PRESSURE SWITCH		1	1	1	1	1	1		63H
15	G	R01 E97 202	THERMISTOR	2-phase pipe, Ambient	1	1	1	1	1	1		TH6,7
16	G	R01 E30 403	4-WAY VALVE		1			1				
17	G	T7W E33 242	SOLENOID COIL (4-WAY VALVE)		1			1				21S4
18	G	T7W E39 716	TERMINAL BLOCK	6P (L1,L2,GR,S1,S2,S3)	1	1	1	1	1	1		TB1
19	G	T7W GL0 315	CONTROLLER CIRCUIT BOARD		1	1	1	1	1	1		C.B.
20	G	R01 E22 259	REACTOR		1	1	1	1	1	1		ACL
21	G	T7W E20 346	NOISE FILTER CIRCUIT BOARD		1	1	1	1	1	1		N.F.
22	G	T7W AG0 323	POWER CIRCUIT BOARD		1	1	1	1	1	1		P.B.
23	G	R01 E99 202	THERMISTOR	Heat sink	1	1	1	1	1	1		TH8
24	G	T7W A02 371	HEAT SINK		1	1	1	1	1	1		
25	G	R01 H33 408	HEAT EXCHANGER			1			1			
	G	R01 H35 408	HEAT EXCHANGER		1		1	1		1		
26	G	R01 A65 602	COMP FELT (TOP)		1	1	1	1	1	1		
27	G	R01 A64 602	COMP FELT (BODY)		1	1	1	1	1	1		
28	G	R01 E14 239	FUSE 6.3A 250V	6.3A 250V	4	4	4	4	4	4		F1,2,3,4
29	G	T7W A01 510	LEAD ASSY COMP		1	1	1	1	1	1		

RoHS PARTS LIST

FUNCTIONAL PARTS
PUZ-A24NHA6 PUZ-A24NHA6-BS
PUY-A24NHA6 PUY-A24NHA6-BS

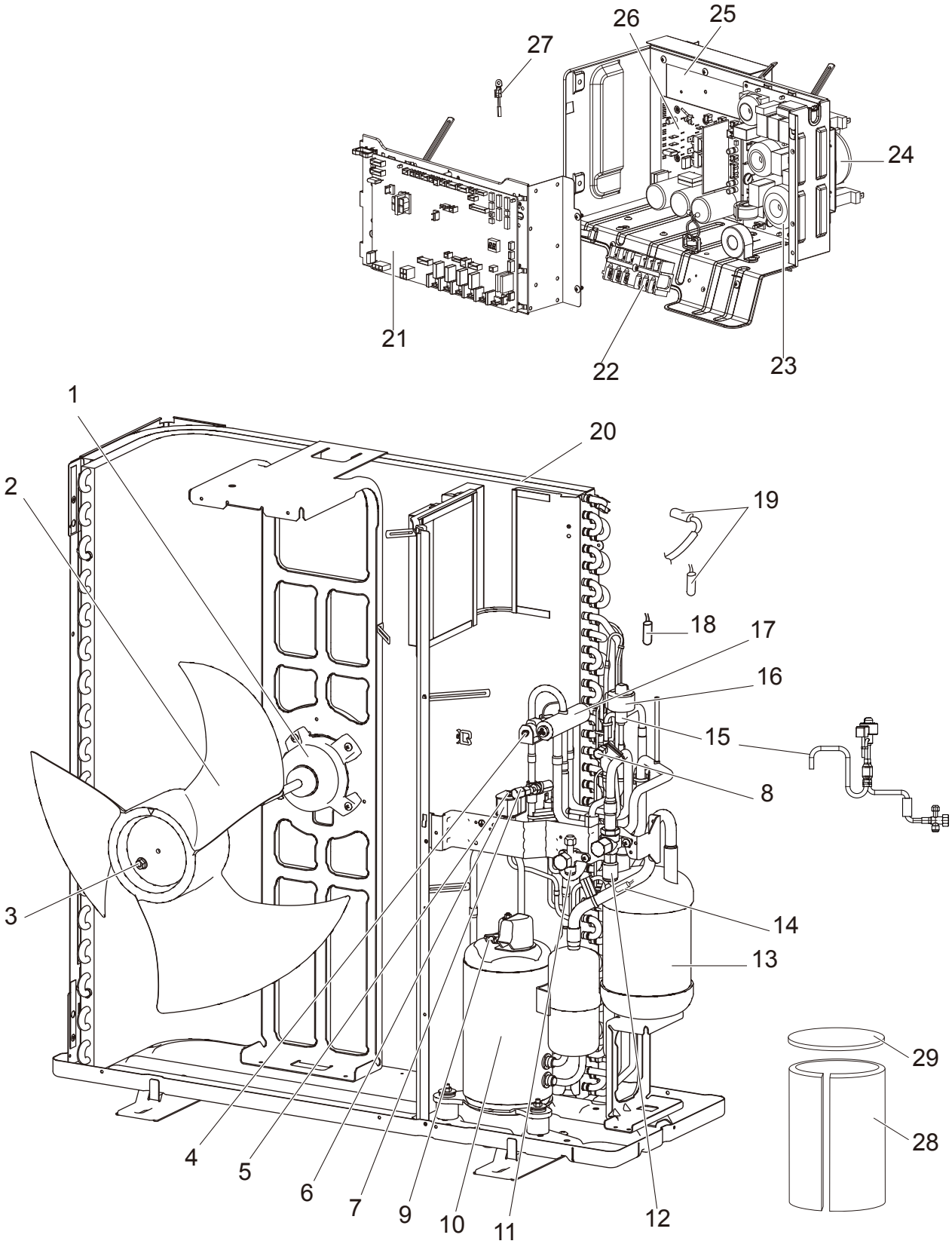

RoHS PARTS LIST

Parts numbers that are circled are not shown in the figure.

No.	RoHS	Parts No.	Parts Name	Specification	Q'ty/unit				Remarks	Wiring Diagram Symbol
					PUZ-A24NHA6	PUY-A24NHA6	PUZ-A24NHA6-BS	PUY-A24NHA6-BS		
1	G	R01 E72 221	FAN MOTOR		1	1	1	1		MF1
2	G	R01 E12 115	PROPELLER FAN		1	1	1	1		
3	G	R01 E09 097	NUT		1	1	1	1		
4	G	T7W E20 242	SOLENOID COIL <4-WAY VALVE>		1		1			21S4
5	G	R01 E13 428	BYPASS VALVE		1	1	1	1		
6	G	T7W E19 242	SOLENOID COIL <BYPASS VALVE>		1	1	1	1		SV
7	G	R01 E12 413	CHARGE PLUG		1	1	1	1		
8	G	R01 E12 413	CHARGE PLUG		1		1			
	G	T7W E10 413	CHARGE PLUG			1		1	Near BALL VALVE	
9	G	T7W E11 201	THERMISTOR	Comp. surface	1	1	1	1		TH32
10	G	T92 508 801	COMPRESSOR	TNB220FLHM	1	1	1	1	Including RUBBER MOUNT	MC
11	G	T7W E04 410	STOP VALVE	3/8	1	1	1	1		
12	G	R01 E12 411	BALL VALVE	5/8	1	1	1	1		
13	G	R01 E57 440	ACCUMULATOR		1	1	1	1		
14	G	R01 H79 202	THERMISTOR	Suction	1	1	1	1		TH33
15	G	T7W E68 401	LEV-A ASSY		1	1	1	1	Including LEV COIL and STOP VALVE	
16	G	R01 E50 242	LEV COIL		1	1	1	1	CONNECTOR: WHITE	LEV-A
17	G	R01 E28 403	4-WAY VALVE		1		1			
18	G	T7W E73 202	THERMISTOR	Liquid	1	1	1	1		TH3
19	G	R01 E94 202	THERMISTOR	2-phase pipe, Ambient	1	1	1	1		TH6,7
20	G	T7W E76 408	HEAT EXCHANGER		1	1	1	1		
21	G	T7W GL0 315	CONTROLLER CIRCUIT BOARD		1	1	1	1		C.B.
22	G	T7W E40 716	TERMINAL BLOCK	6P(L1,L2,GR,S1,S2,S3)	1	1	1	1		TB1
23	G	T7W E21 346	NOISE FILTER CIRCUIT BOARD		1	1	1	1		N.F.
24	G	R01 E33 259	REACTOR		1	1	1	1		ACL
25	G	R01 A09 371	HEAT SINK		1	1	1	1		
26	G	T7W AH0 323	POWER CIRCUIT BOARD		1	1	1	1		P.B.
27	G	R01 E99 202	THERMISTOR	Heat sink	1	1	1	1		TH8
28	G	R01 A68 602	COMP FELT (BODY)		1	1	1	1		
29	G	R01 A69 602	COMP FELT (TOP)		1	1	1	1		
30	G	T7W E07 208	HIGH PRESSURE SWITCH		1	1	1	1		63H
31	G	R01 E14 239	FUSE 6.3A 250V	6.3A 250V	4	4	4	4		F1,2,3,4
32	G	R01 E37 510	LEAD ASSY COMP		1	1	1	1		

RoHS PARTS LIST

FUNCTIONAL PARTS

PUZ-A30NHA6 PUZ-A30NHA6-BS
PUZ-A36NHA6 PUZ-A36NHA6-BS
PUY-A30NHA6 PUY-A30NHA6-BS
PUY-A36NHA6 PUY-A36NHA6-BS

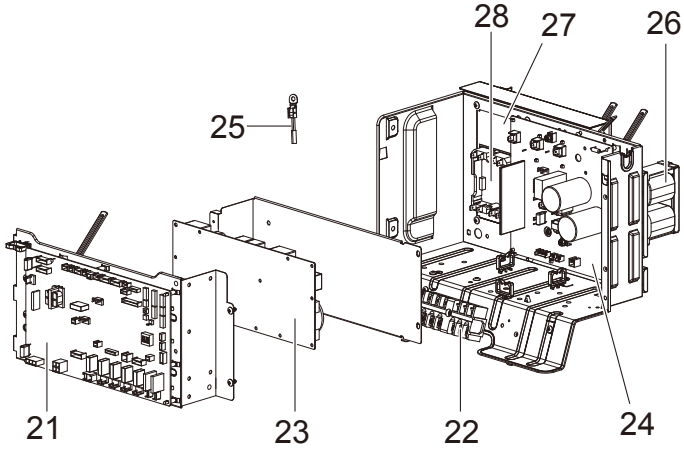

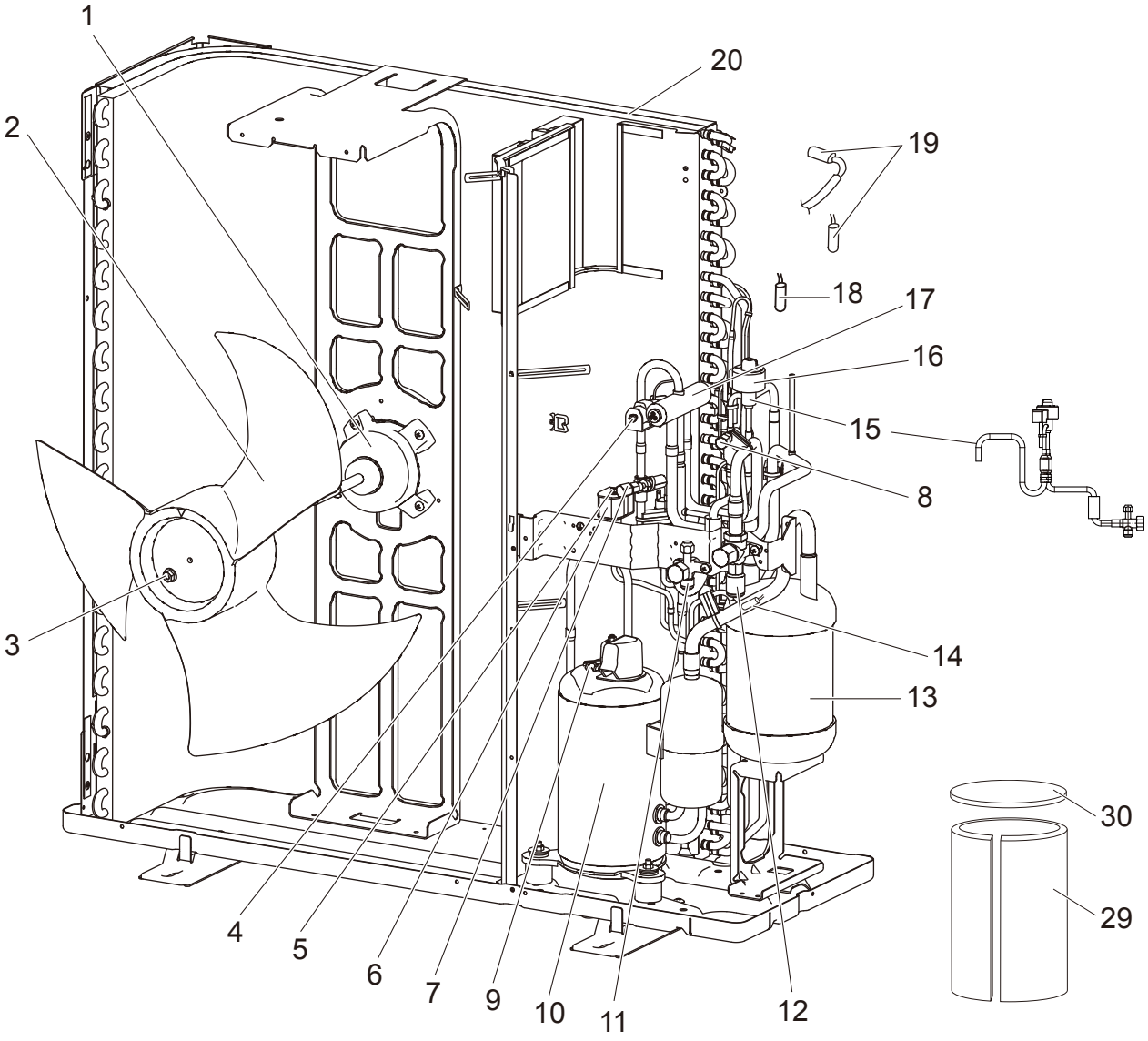

OCB577A

RoHS PARTS LIST

Parts numbers that are circled are not shown in the figure.

No.	RoHS	Parts No.	Parts Name	Specification	PUZ-A30NHA6	PUZ-A36NHA6	PUY-A30NHA6	PUY-A36NHA6	PUZ-A30NHA6-BS	PUZ-A36NHA6-BS	PUY-A30NHA6-BS	PUY-A36NHA6-BS	Remarks	Wiring Diagram Symbol
1	G	R01 E72 221	FAN MOTOR		1	1	1	1	1	1	1	1		MF1
2	G	R01 E12 115	PROPELLER FAN		1	1	1	1	1	1	1	1		
3	G	R01 E09 097	NUT		1	1	1	1	1	1	1	1		
4	G	T7W E20 242	SOLENOID COIL <4-WAY VALVE>		1	1			1	1				21S4
5	G	R01 E13 428	BYPASS VALVE		1	1	1	1	1	1	1	1		
6	G	T7W E19 242	SOLENOID COIL <BYPASS VALVE>		1	1	1	1	1	1	1	1		SV
7	G	R01 E12 413	CHARGE PLUG		1	1	1	1	1	1	1	1		
8	G	R01 E12 413	CHARGE PLUG		1	1			1	1				
	G	T7W E10 413	CHARGE PLUG				1	1			1	1	Near BALL VALVE	
9	G	T7W E11 201	THERMISTOR	Comp. surface	1	1	1	1	1	1	1	1		TH32
10	G	T92 508 801	COMPRESSOR	TNB220FLHM	1	1	1	1	1	1	1	1	Including RUBBER MOUNT	MC
11	G	T7W E04 410	STOP VALVE	3/8	1	1	1	1	1	1	1	1		
12	G	R01 E12 411	BALL VALVE	5/8	1	1	1	1	1	1	1	1		
13	G	R01 E57 440	ACCUMULATOR		1	1	1	1	1	1	1	1		
14	G	R01 H79 202	THERMISTOR	Suction	1	1	1	1	1	1	1	1		TH33
15	G	T7W E68 401	LEV-A ASSY		1	1	1	1	1	1	1	1	Including LEV COIL and STOP VALVE	
16	G	R01 E50 242	LEV COIL		1	1	1	1	1	1	1	1	CONNECTOR: WHITE	LEV-A
17	G	R01 E28 403	4-WAY VALVE		1	1			1	1				
18	G	R01 N01 202	THERMISTOR	Liquid	1	1	1	1	1	1	1	1		TH3
19	G	R01 E94 202	THERMISTOR	2-phase pipe, Ambient	1	1	1	1	1	1	1	1		TH6,7
20	G	T7W E77 408	HEAT EXCHANGER		1	1	1	1	1	1	1	1		
21	G	T7W GM0 315	CONTROLLER CIRCUIT BOARD		1	1	1	1	1	1	1	1		C.B.
22	G	T7W E40 716	TERMINAL BLOCK	6P(L1,L2,GR,S1,S2,S3)	1	1	1	1	1	1	1	1		TB1
23	G	R01 E22 346	NOISE FILTER CIRCUIT BOARD		1	1	1	1	1	1	1	1		N.F.
24	G	T7W AJ0 323	POWER CIRCUIT BOARD		1	1	1	1	1	1	1	1		P.B.
25	G	R01 E99 202	THERMISTOR	Heat sink	1	1	1	1	1	1	1	1		TH8
26	G	T7W E24 259	REACTOR		1	1	1	1	1	1	1	1		DCL
27	G	R01 A13 371	HEAT SINK		1	1	1	1	1	1	1	1		
28	G	R01 E07 233	ACT MODULE		1	1	1	1	1	1	1	1		ACTM
29	G	R01 A68 602	COMP FELT (BODY)		1	1	1	1	1	1	1	1		
30	G	R01 A69 602	COMP FELT (TOP)		1	1	1	1	1	1	1	1		
31	G	T7W E07 208	HIGH PRESSURE SWITCH		1	1	1	1	1	1	1	1		63H
32	G	R01 E14 239	FUSE 6.3A 250V	6.3A 250V	4	4	4	4	4	4	4	4		F1,2,3,4
33	G	R01 E38 510	LEAD ASSY COMP		1	1	1	1	1	1	1	1		

RoHS PARTS LIST

FUNCTIONAL PARTS

PUZ-A42NHA6 PUZ-A42NHA6-BS
PUY-A42NHA6 PUY-A42NHA6-BS

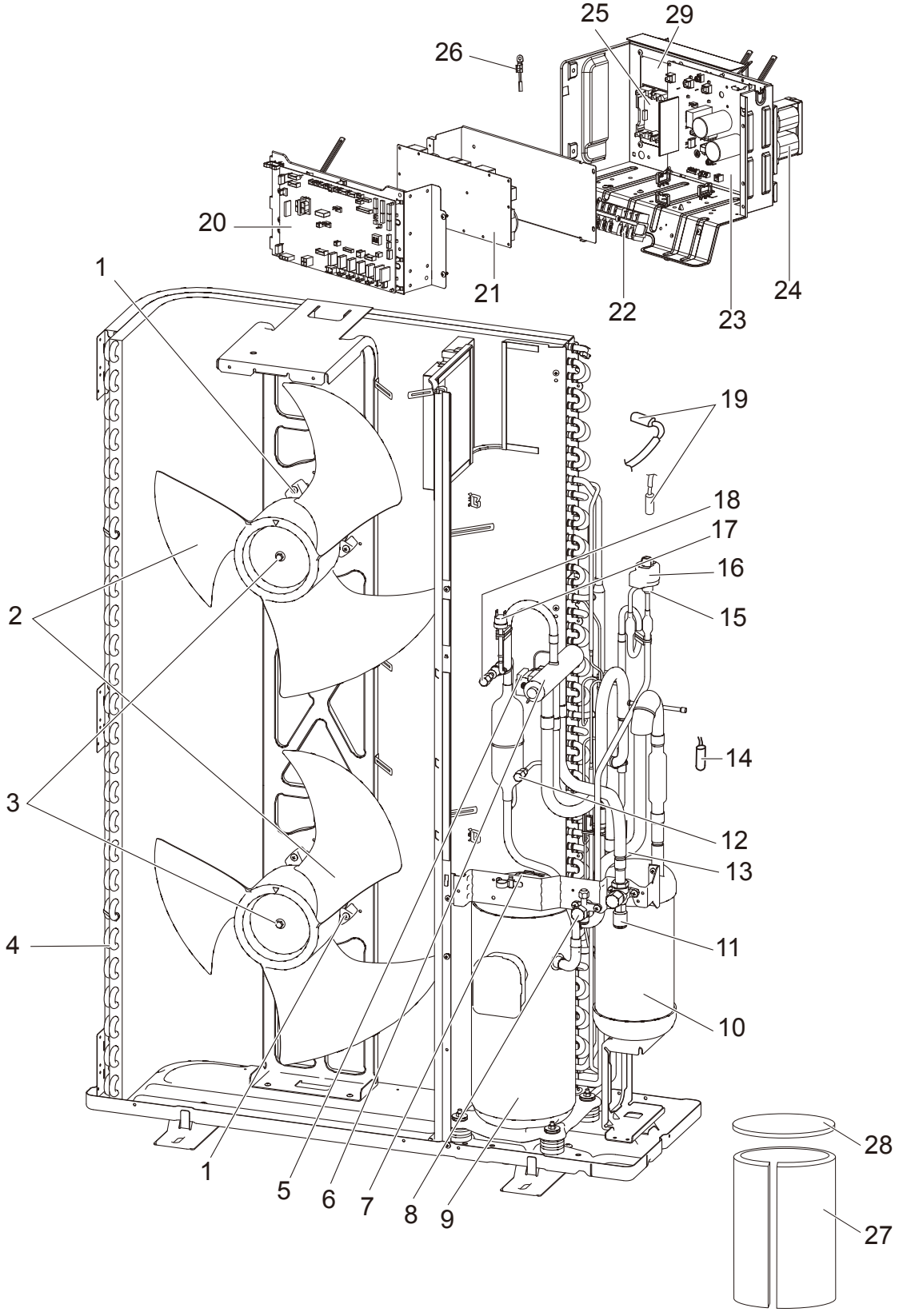

RoHS PARTS LIST

Parts numbers that are circled are not shown in the figure.

No.	RoHS	Parts No.	Parts Name	Specification	Q'ty/unit				Remarks	Wiring Diagram Symbol
					PUZ-A42NHA6	PUY-A42NHA6	PUZ-A42NHA6-BS	PUY-A42NHA6-BS		
1	G	R01 E72 221	FAN MOTOR		1	1	1	1	TOP	MF1
	G	R01 E73 221	FAN MOTOR		1	1	1	1	BOTTOM	MF2
2	G	R01 E12 115	PROPELLER FAN		2	2	2	2		
3	G	R01 E09 097	NUT		2	2	2	2		
4	G	T7W E78 408	HEAT EXCHANGER		1	1	1	1		
5	G	T7W E21 242	SOLENOID COIL <4-WAY VALVE>		1		1			21S4
6	G	T7W E05 403	4-WAY VALVE		1		1			
7	G	T7W E11 201	THERMISTOR	Comp. surface	1	1	1	1		TH32
8	G	T7W E04 410	STOP VALVE	3/8	1	1	1	1		
9	G	T97 415 790	COMPRESSOR	ANB33FCTMT	1	1	1	1	Including RUBBER MOUNT	MC
10	G	R01 E58 440	ACCUMULATOR		1	1	1	1		
11	G	R01 E12 411	BALL VALVE	5/8	1	1	1	1		
12	G	T7W E10 413	CHARGE PLUG		1	1	1	1		
13	G	R01 M05 202	THERMISTOR	Suction	1	1	1	1		TH33
14	G	R01 H00 202	THERMISTOR	Liquid	1	1	1	1		TH3
15	G	T7W E69 401	LEV-A ASSY		1	1	1	1	Including LEV COIL and STOP VALVE	
16	G	R01 E50 242	LEV COIL		1	1	1	1	CONNECTOR: WHITE	LEV-A
17	G	T7W E07 208	HIGH PRESSURE SWITCH		1	1	1	1		63H
18	G	R01 E28 413	CHARGE PLUG		1	1	1	1	Near HPS	
19	G	R01 E94 202	THERMISTOR	2-phase pipe, Ambient	1	1	1	1		TH6,7
20	G	T7W GN1 315	CONTROLLER CIRCUIT BOARD		1	1	1	1		C.B.
21	G	R01 E22 346	NOISE FILTER CIRCUIT BOARD		1	1	1	1		N.F.
22	G	T7W E40 716	TERMINAL BLOCK	6P(L1,L2,GR,S1,S2,S3)	1	1	1	1		TB1
23	G	T7W AK0 323	POWER CIRCUIT BOARD		1	1	1	1		P.B.
24	G	T7W E24 259	REACTOR		1	1	1	1		DCL
25	G	R01 E07 233	ACT MODULE		1	1	1	1		ACTM
26	G	R01 E99 202	THERMISTOR	Heat sink	1	1	1	1		TH8
27	G	R01 A56 602	COMP FELT (BODY)		1	1	1	1		
28	G	R01 A57 602	COMP FELT (TOP)		1	1	1	1		
29	G	R01 A13 371	HEAT SINK		1	1	1	1		
30	G	R01 E39 510	LEAD ASSY COMP		1	1	1	1		
31	G	R01 E20 254	MAIN SMOOTHING CAPACITOR		1	1	1	1		CB
32	G	R01 E14 239	FUSE 6.3A 250V	6.3A 250V	4	4	4	4		F1,2,3,4

RoHS PARTS LIST

STRUCTURAL PARTS

PUZ-A18NHA6
PUY-A12NHA6
PUY-A18NHA6
PUZ-A18NHA6-BS
PUY-A12NHA6-BS
PUY-A18NHA6-BS

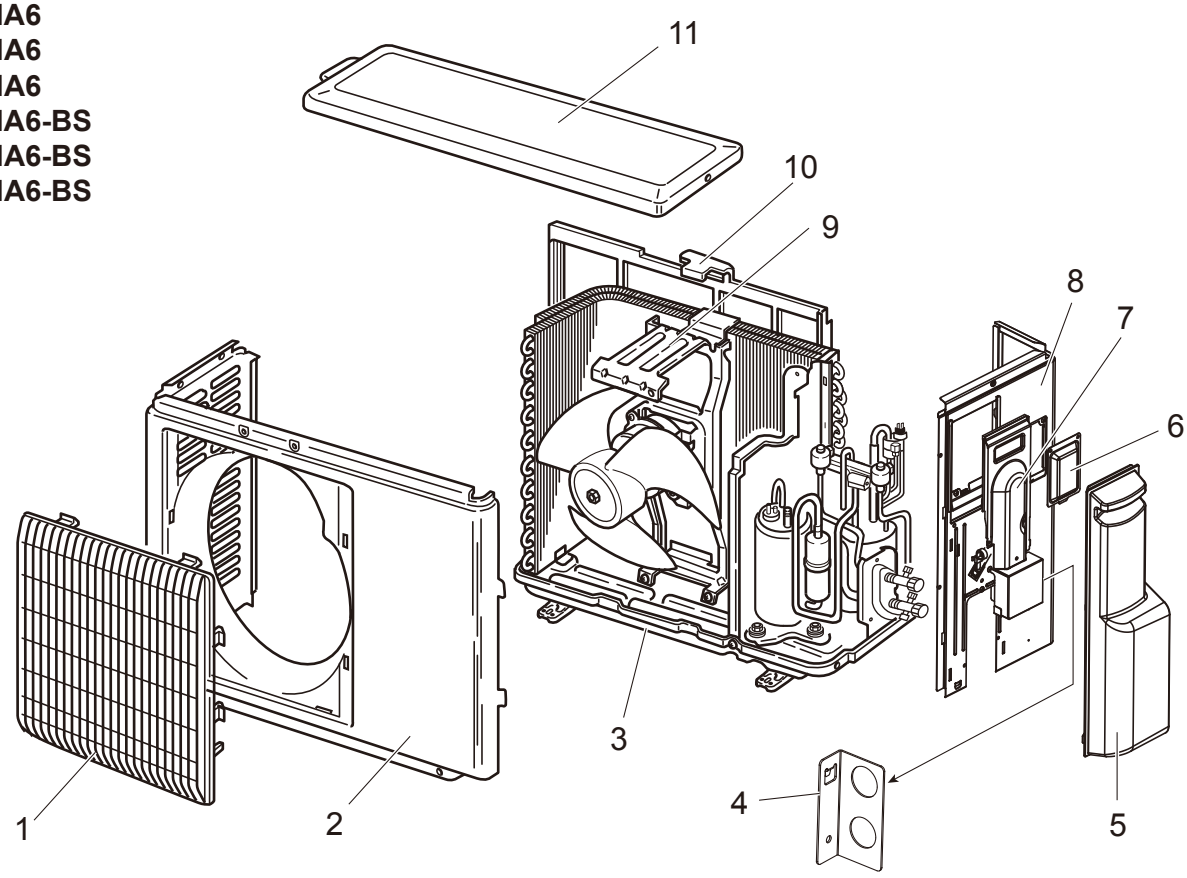

No.	RoHS	Parts No.	Parts Name	Q'ty/unit						Remarks
				PUZ-A18NHA6	PUY-A12NHA6	PUY-A18NHA6	PUZ-A18NHA6-BS	PUY-A12NHA6-BS	PUY-A18NHA6-BS	
1	G	R01 E30 691	GRILLE	1	1	1	1	1	1	
2	G	R01 E25 668	FRONT PANEL	1	1	1	1	1	1	
3	G	R01 E48 686	BASE ASSY	1	1	1	1	1	1	
4	G	T7W E00 617	CONDUIT PLATE	1	1	1	1	1	1	
5	G	T7W E03 667	SERVICE PANEL	1	1	1	1	1	1	
6	G	R01 E01 518	SERVICE PANEL (FOR CHARGE PLUG)	1	1	1	1	1	1	
7	G	T7W E00 649	CORD COVER	1	1	1	1	1	1	
8	G	T7W E08 682	REAR PANEL	1	1	1	1	1	1	
9	G	R01 E51 130	MOTOR SUPPORT		1			1		
	G	R01 E52 130	MOTOR SUPPORT	1		1	1		1	
10	G	R01 E03 684	CONDENSER NET		1			1		
	G	R01 E02 684	CONDENSER NET	1		1	1		1	
11	G	T7W E05 641	TOP PANEL	1	1	1	1	1	1	

RoHS PARTS LIST

STRUCTURAL PARTS

PUZ-A24NHA6
PUZ-A30NHA6
PUZ-A36NHA6
PUY-A24NHA6
PUY-A30NHA6
PUY-A36NHA6
PUZ-A24NHA6-BS
PUZ-A30NHA6-BS
PUZ-A36NHA6-BS
PUY-A24NHA6-BS
PUY-A30NHA6-BS
PUY-A36NHA6-BS

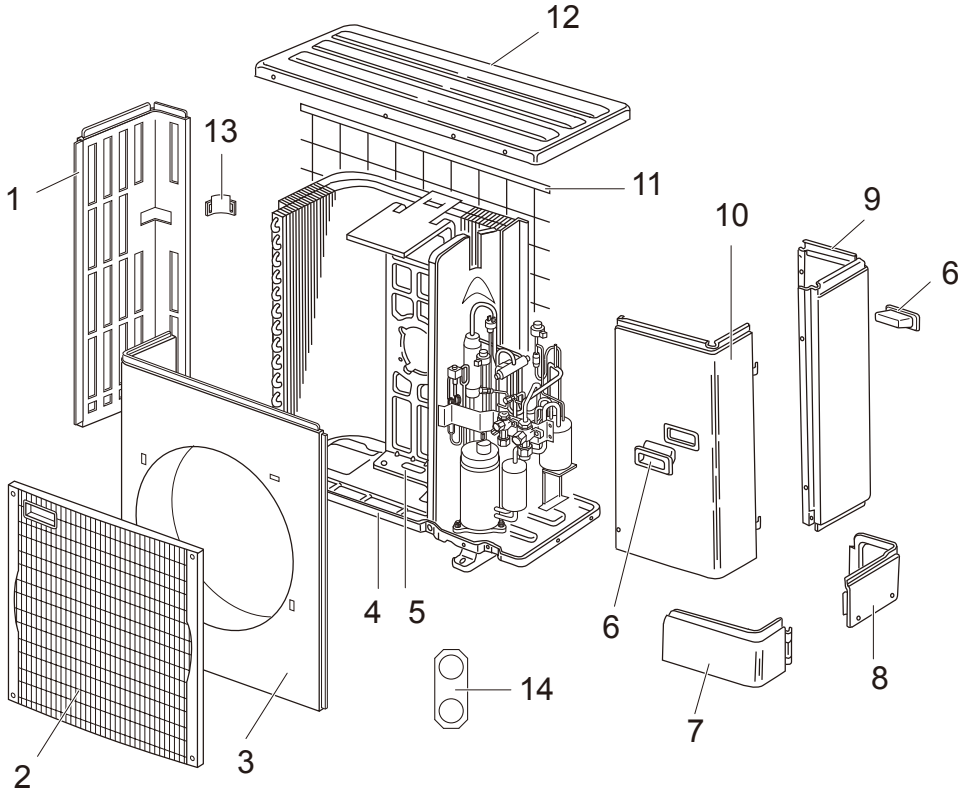

No.	RoHS	Parts No.	Parts Name	Q'ty/unit												Remarks
				PUZ-A24NHA6	PUZ-A30NHA6	PUZ-A36NHA6	PUY-A24NHA6	PUY-A30NHA6	PUY-A36NHA6	PUZ-A24NHA6-BS	PUZ-A30NHA6-BS	PUZ-A36NHA6-BS	PUY-A24NHA6-BS	PUY-A30NHA6-BS	PUY-A36NHA6-BS	
1	G	R01 E19 662	SIDE PANEL (L)	1	1	1	1	1	1	1	1	1	1	1	1	
2	G	T7W E03 691	FAN GRILLE	1	1	1	1	1	1	1	1	1	1	1	1	
3	G	T7W E05 667	FRONT PANEL	1	1	1	1	1	1	1	1	1	1	1	1	
4	G	R01 E33 686	BASE ASSY	1	1	1	1	1	1	1	1	1	1	1	1	
5	G	R01 E12 130	MOTOR SUPPORT	1	1	1	1	1	1	1	1	1	1	1	1	
6	G	R01 E01 655	HANDLE	2	2	2	2	2	2	2	2	2	2	2	2	
7	G	R01 E40 658	COVER PANEL (FRONT)	1	1	1	1	1	1	1	1	1	1	1	1	
8	G	R01 E24 658	COVER PANEL (REAR)	1	1	1	1	1	1	1	1	1	1	1	1	
9	G	R01 E05 661	SIDE PANEL (R)	1	1	1	1	1	1	1	1	1	1	1	1	
10	G	T7W E18 668	SERVICE PANEL	1	1	1	1	1	1	1	1	1	1	1	1	
11	G	R01 E06 698	REAR GUARD	1	1	1	1	1	1	1	1	1	1	1	1	
12	G	R01 E29 641	TOP PANEL	1	1	1	1	1	1	1	1	1	1	1	1	
13	G	R01 E02 655	HANDLE	1	1	1	1	1	1	1	1	1	1	1	1	
14	G	T7W E01 617	CONDUIT PLATE	1	1	1	1	1	1	1	1	1	1	1	1	

RoHS PARTS LIST

STRUCTURAL PARTS
PUZ-A42NHA6
PUY-A42NHA6
PUZ-A42NHA6-BS
PUY-A42NHA6-BS

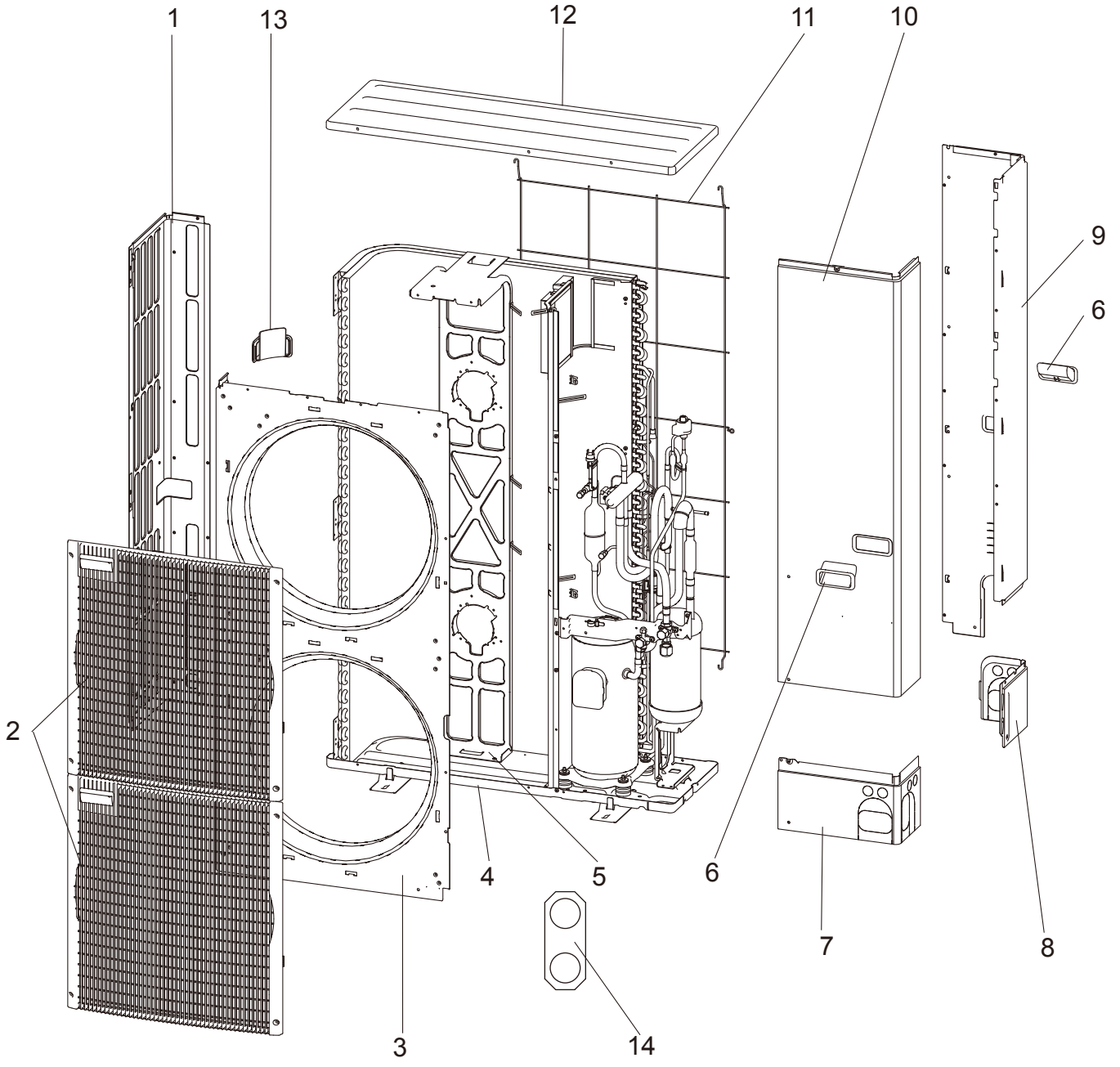

RoHS PARTS LIST

No.	RoHS	Parts No.	Parts Name	Q'ty/unit				Remarks
				PUZ-A42NHA6	PUY-A42NHA6	PUZ-A42NHA6-BS	PUY-A42NHA6-BS	
1	G	R01 E33 662	SIDE PANEL (L)	1	1	1	1	
2	G	T7W E03 691	FAN GRILLE	2	2	2	2	
3	G	T7W E06 667	FRONT PANEL	1	1	1	1	
4	G	R01 E26 686	BASE ASSY	1	1	1	1	
5	G	R01 E19 130	MOTOR SUPPORT	1	1	1	1	
6	G	R01 E01 655	HANDLE	2	2	2	2	
7	G	R01 E13 658	COVER PANEL (FRONT)	1	1	1	1	
8	G	R01 E24 658	COVER PANEL (REAR)	1	1	1	1	
9	G	R01 E44 661	SIDE PANEL (R)	1	1	1	1	
10	G	T7W E08 668	SERVICE PANEL	1	1	1	1	
11	G	R01 E07 698	REAR GUARD	1	1	1	1	
12	G	R01 E29 641	TOP PANEL	1	1	1	1	
13	G	R01 E02 655	HANDLE	1	1	1	1	
14	G	T7W E01 617	CONDUIT PLATE	1	1	1	1	

Mr.SLIM

MITSUBISHI ELECTRIC CORPORATION
HEAD OFFICE : TOKYO BLDG., 2-7-3, MARUNOUCHI, CHIYODA-KU, TOKYO 100-8310, JAPAN

©Copyright 2015 MITSUBISHI ELECTRIC CORPORATION
Distributed in Aug. 2015 No.OCB577 REVISED EDITION-A
Distributed in Jan. 2015 No.OCB577
Made in Japan

New publication, effective Aug. 2015
Specifications are subject to change without notice.