[1] Electrical Wiring Diagram of the Outdoor Unit

(1) PURY-P72TJMU-A

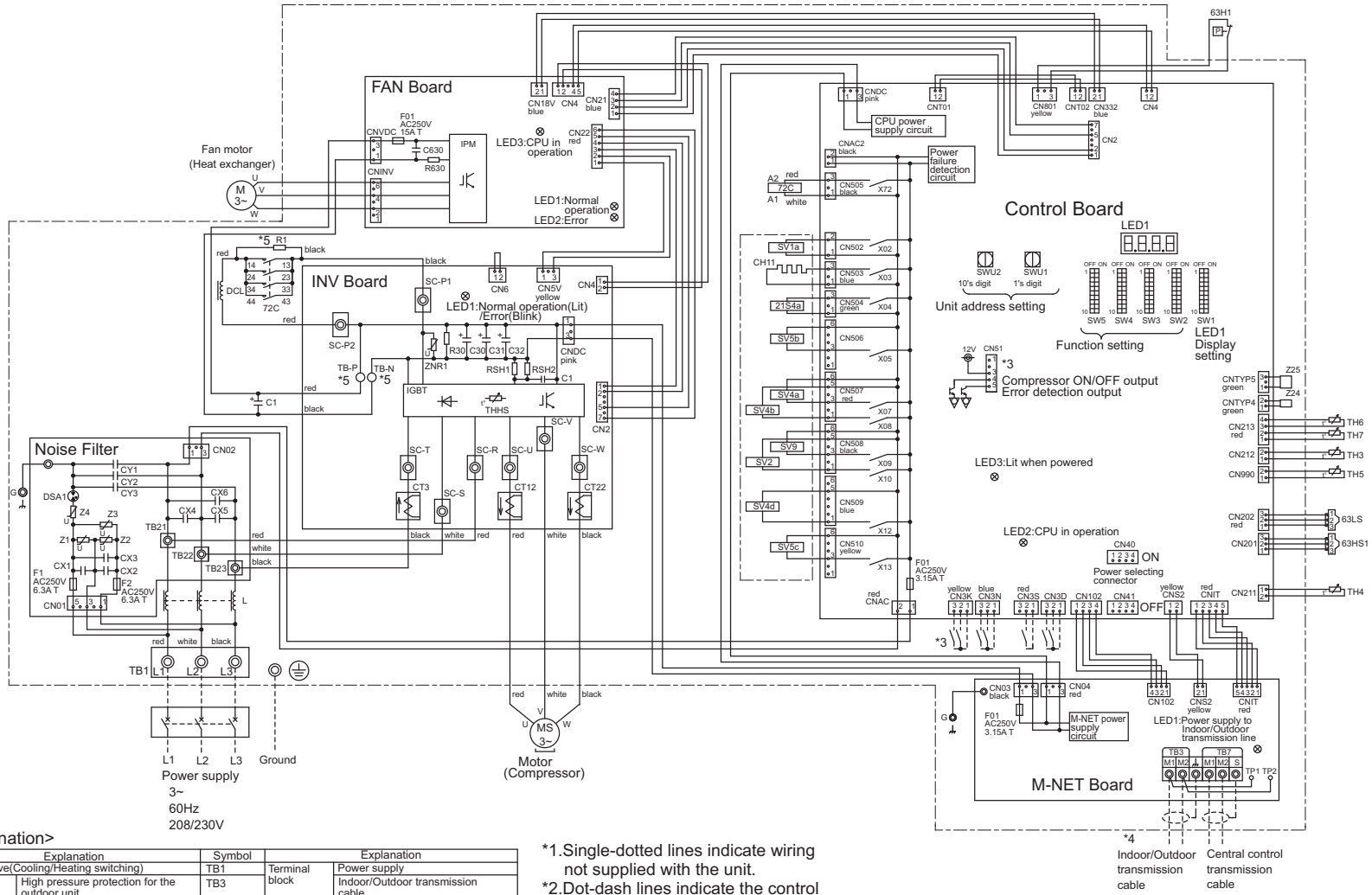

<Symbol explanation>

Symbol	Explanation		Symbol	Explanation	
21S4a	4-way valve(Cooling/Heating switching)		TB1	Terminal block	Power supply
63H1	Pressure switch	High pressure protection for the outdoor unit	TB3		Indoor/Outdoor transmission cable
63HS1	Pressure sensor	Discharge pressure	TB7		Central control transmission cable
63LS		Low pressure			
72C	Magnetic relay(inverter main circuit)		TH3	Thermistor	Liquid pipe temperature
CT12,22,3	Current sensor(AC)		TH4		Discharge pipe temperature
CH11	Crankcase heater(for heating the compressor)		TH5		ACC inlet pipe temperature
DCL	DC reactor		TH6		Heat exchanger inlet pipe temperature
SV1a	Solenoid valve	For opening/closing the bypass circuit under the O/S	TH7		OA temperature
SV2		Discharge suction bypass	THHS		IGBT temperature
SV4a,b,d		Heat exchanger capacity control	Z24,25	Function setting connector	
SV5b		For opening/closing the bypass circuit			
SV5c		Heat exchanger low pressure bypass			
SV9		For opening/closing the bypass circuit			

*1.Single-dotted lines indicate wiring not supplied with the unit.
*2.Dot-dash lines indicate the control box boundaries.
*3.Refer to the Data book for connecting input/output signal connectors.
*4.Daisy-chain terminals (TB3) on the outdoor units in the same refrigerant system together.
*5.Faston terminals have a locking function.Make sure the terminals are securely locked in place after insertion.Press the tab on the terminals to remove them.