Lossnay
Remote Controller

1. Summary

Technical manual detailing the control and operation of commercial-type Lossnay units (LGH-RX5-E Series).

Possible System Configurations

(1) When using only the Lossnay remote controller.
(2) Linking Lossnay and City Multi units.
(3) Linking Mr. Slim.
(4) Lossnay central control systems.
(5) Linking with external equipment (BMS).

2. Applicable Models

● Lossnay (LGH-RX type)

These models have temperature sensors at return stale indoor air (RA) and outside air intake (OA) sides and can automatically switch to ventilation (Lossnay/By-pass) mode.

LGH-15RX5 -E	LGH-25RX5-E	LGH-35RX5-E	LGH-50RX5 -E	LGH-65RX5-E
LGH-80RX5-E	LGH-100RX5 -E	LGH-150RX5-E	LGH-200RX5-E	

● Lossnay Remote Controller (PZ-60DR-E)

It is possible to control all of the function of LGH-RX5-E, such as, Extra-Low-fan speed, weekly timer.
Use when operating from 1 to 15 Lossnay units together at the same time.
PZ-60DR-E is not M-NET control, however, LGH-RX5-E can be use with PZ-60DR-E in the M-NET system. (Refer to page C-78).

● Lossnay Remote Controller (PZ-41SLB-E)

Use when operating from 1 to 15 Lossnay units together at the same time. When using M-NET transmission to operate from a centralized remote controller, use the PZ-60DR-E OR PZ-52SF-E.
It can start and stop the unit, change fan speed, and switch the ventilation mode. It also includes indicators that show errors and when filter maintenance is required Function is limited in case of LGH-RX5-E (Refer to page C-91).

● Lossnay M-NET Remote Controller (PZ-52SF-E)

Use with Mitsubishi Electric Air conditioner Network system (MELANS) (Refer to page C-92). Because the remote controller is power-supplied using the M-NET transmission line, it cannot be linked with Mr. Slim and other such systems that do not use M-NET. It can start and stop the unit, change fan speed, and switch the ventilation mode. It also includes indicators that show errors and when filter maintenance is required Function is limited in case of LGH-RX5-E (Refer to page C-92).

Please refer to the technical documentation for City Multi, Mr. Slim systems and the central controller (MELANS).

3. Terminology

● Interlocked Lossnay

A Lossnay linked to City Multi or Mr. Slim indoor units that has been set to interlocked group setting to receive signals and operate via indoor unit's remote controller. (Remote controller to indoor unit to Lossnay.)

● Non interlocked Lossnay

A Lossnay that is not set to interlocked group setting with City Multi or Mr. Slim indoor units. It operates using direct operating signals from the Lossnay remote controller and/or centralized remote controller.

● Ventilation Mode

Controls the Lossnay damper and permits selection of heat recovery (heat exchange), By-pass or auto modes.

● Timer control. (PZ-60DR-E)

PZ-60DR-E has weekly timer and simple timer.

- weekly timer : The operation pattern for each day of the week and the air-volume by time zone can be set (up to eight zones per day).
- simple timer : Three setting is available , start-timer only, stop time only or start & stop.

● Delayed Operation

A Lossnay that has been set to interlocked group setting with the indoor unit will have its operation delayed for 30 minutes after the operation of the indoor unit. When using PZ-41SLB-E, delayed operation can be set for 10, 20, 30, 40, 50 and 60 minutes.

● External Control Input

- An input signal from an external device used to operate Lossnay. It is compatible with 12V-24V DC or uncharged a-contact signal.
- Switching High Low or Extra-Low fan speed is available by external input (CO_2 sensor or other equipment is connected).
- Switching By-pass is available by external input.

● Operation Mode

Used for selecting enabling/disabling of the on/off control signal from an external device, and for setting interlocked operation of the external device and Lossnay.
Please Refer to page C-23 for details.

ON/OFF interlock:	Enables both "ON → OFF" and "OFF → ON" external signals.
ON interlock:	Enables "OFF → ON" external signal. Disables "ON → OFF" external signal.
OFF interlock:	Enables "ON → OFF" external signal. Disables "OFF → ON" external signal.
External control priority:	Same as on/off interlock but the OFF signal from the remote controller is ignored when the external control signal is ON.

● Setting Pulse Input

When the control signal from the external device outputs a pulse such as the one shown below, pulse input setting is performed by Lossnay. (Optional setting DIP switch 2-2 ON)

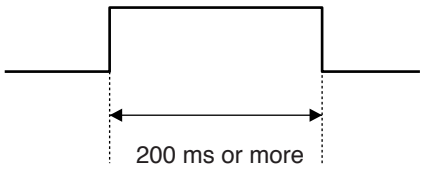

● Operation in Cold Areas

When the outdoor air is less than -10°C, continuous fan operation for drawing in supply air is cancelled and intermittent operation is started.

● RA (Return Air)

Abbreviation for return air, which is the air drawn in from inside.

● OA (Outdoor Air)

Abbreviation for outdoor air, which is the air drawn in from outside.

4. System Features and Examples

4.1 Features

Classification	Item	Notes/Cautions
Control	• Multiple unit operation	Maximum 15 units with PZ-60DR-E & PZ-41SLB-E; 16 units with PZ-52SF-E or other M-NET controllers.
	• Remote controller operation	Last condition priority before turning off the unit.
	• External device operation and external pulse control	Signal : 12VDC, 24VDC, uncharged a-contact.
	• External monitor signal output and supply air fan monitor output	Uncharged a-contact (external monitor/supply air fan monitor change).
	• External control operation mode setting	ON/OFF, ON, OFF and external control priority ON/OFF mode.
	• Timer control	Weekly timer & simple timer available for PZ-60DR-E.
	• Delayed start	Delayed time can be varied only when the PZ-41SLB-E is connected.
	• Automatic recovery following power supply interruption (*1)	Automatic power recovery is fixed when PZ-60DR-E or PZ-41SLB-E is connected.
	• Power supply start/stop function	Function cannot be performed when PZ-41SLB-E is connected.
	• High/low/Extra-Low change input	Uncharged a-contact (Remote display adaptor (PAC-SA88HA-E) is required.)
	• Remote/local control change	Uncharged a-contact (Remote ON/OFF adaptor (PAC-SE55RAE) is required.)(Function cannot be performed when using PZ-41SLB-E.)
	• M-NET air conditioning operation.	Only when M-NET transmission cable is connected.
	• System controller by Mitsubishi building air control management system	Only when M-NET transmission cable is connected.
	• Interlocked with Mr. Slim	Function cannot be performed with PZ-41SLB-E.
Function	• Lossnay (heat recovery) ventilation/automatic By-pass ventilation switch	Also external By-pass switcing is available(Remote display adaptor (PAC-SA88HA-E) is required).
	• For cold area operation	
Installation	• Two non polar wires for remote controller	For PZ-60DR-E, PZ-41SLB-E connection: ø 0.65 to 1.2 PVC cable or 0.3 mm^2 to 1.25 mm^2 strand wire. For M-NET connection: 1.25 mm^2 to 2.00 m^2 shielded wire or equivalent.
	• Address setting unnecessary	Excluding central controller system (except automatic address).
	• Test operation switch	For Lossnay single unit test operation.
Maintenance	• Filter maintenance display (remote controller display)	Filter, core maintenance display for PZ-60DR-E.
	• Inspection display (remote controller, control board LED)	Error code indication for PZ-60DR-E.
	• M-NET power supply display (control board LED)	

*1 The operation condition is saved, and when the power is turned off and then back on, the operation condition returns to the previous requested condition. (When using PZ-60DR-E, PZ-41SLB-E, the start/stop condition from an external device is not saved.)

4.2 System Examples

Basic System (Refer to page C-11)

One Lossnay with one remote controller

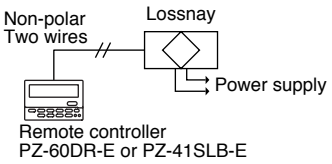

- A simple system in which Lossnay is operated independently with one remote controller.

Multiple Lossnay units with one remote controller

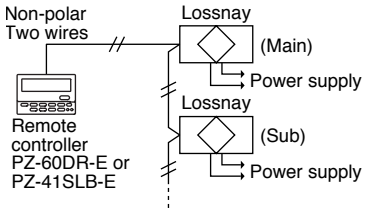

- Up to 15 Lossnay units can be controlled at one time with one remote controller.

Two remote controller system with one Lossnay

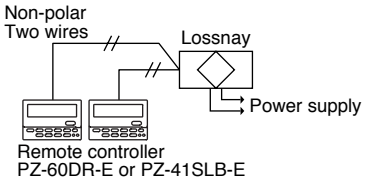

- Lossnay can be controlled from two remote locations.
- The remote controller gives priority to the last operation function request.

Operation with an Air Conditioning Unit (Refer to page C-13)

Operating with Mr. Slim

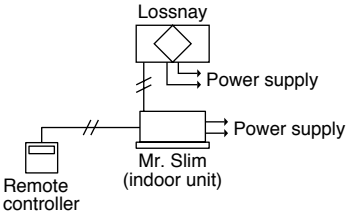

- The Lossnay remote controller (PZ-60DR-E, PZ-41SLB-E) cannot be used with this system.
- Use MA remote controller of Mr.Slim for switching Lossnay ON/OFF or the fan speed.
- The ventilation mode is “automatic ventilation”.

Operating with an External Device (Refer to page C-22)

Operating with an external device

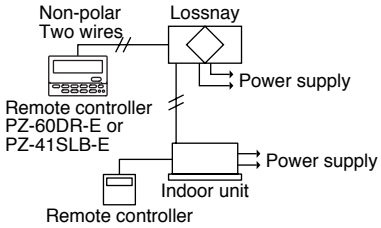

- Selection of inter-locked operation mode is possible.
- Delayed start inter-locked operation is possible.

- Lossnay operation will be performed via the external device.
- Level signal or pulse signal input (12V DC, 24V DC, uncharged a-contact) is possible.

M-NET System

City Multi and Lossnay Interlocked System

Air conditioning device and system control

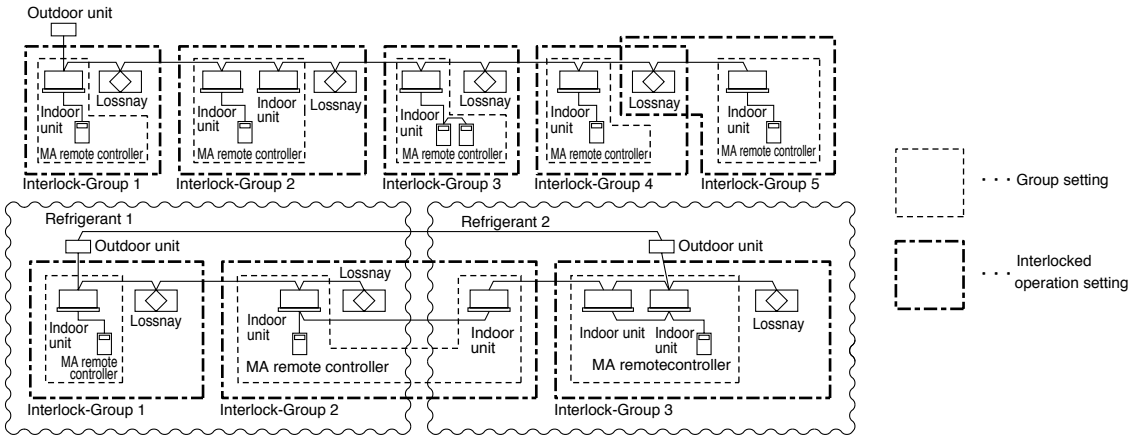

- One Lossnay can be interlocked with 16 indoor units. In addition, PZ-60DR-E (non M-NET) can be connected for each Lossnay units.

Centralized Management System

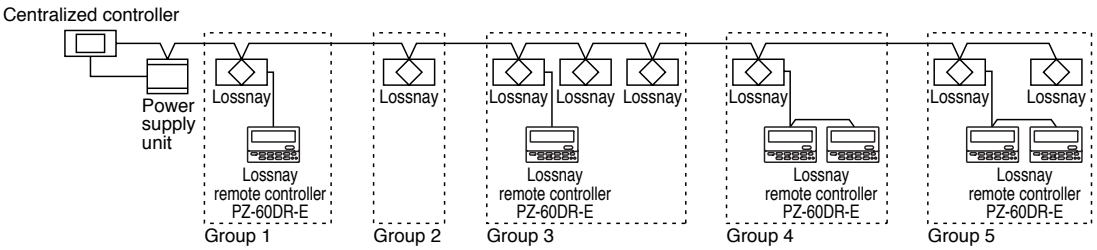

- Detailed control such as start/stop, fan speed Extra-Low and ventilation mode control is possible from the Lossnay remote controller PZ-60DR-E.
- PZ-52SF-E (M-NET remote controller) can be used instead of PZ-60DR-E. However, function is limited and connecting position is different.
- Start/stop, fan speed and ventilation mode control is possible from the centralized controller.
- Controller can set up the group including maximum of 16 indoor or Lossnay units.

Two remote controller system with multiple Lossnay units

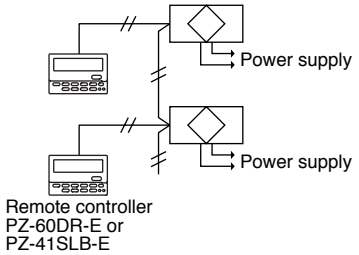

● It is also possible to operate two remote controller units when using multiple Lossnay units.

Use Lossnay remote controller **PZ-60DR-E** or **PZ-41SLB-E** .
(Do not use PZ-52SF-E).

Lossnay transmission connection terminal

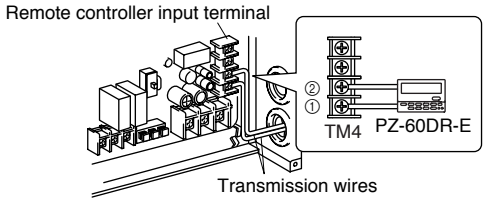

Setting
Change the setting on the main/sub switch (SW1) on the second and subsequent Lossnay units to “Sub”.

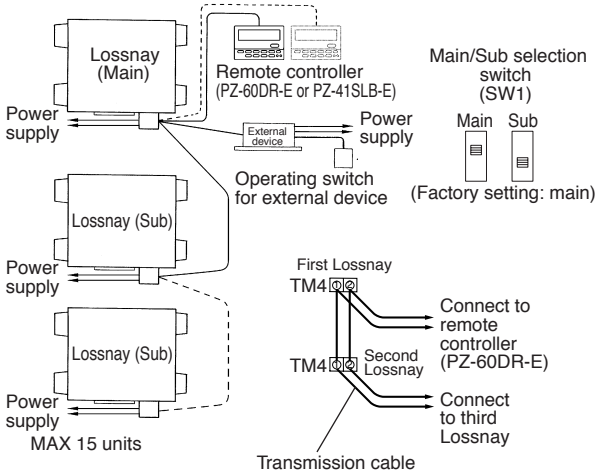

Interlocking multiple units
When the operation signal is an uncharged a-contact signal

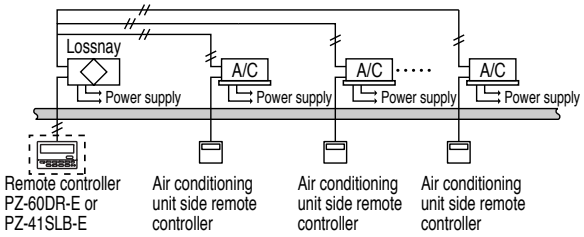

● Interlocking is possible from multiple air conditioning units, etc. (excluding pulse input)
(Separately sold parts are necessary depending on the operation signal).

Interlocking/individual combined systems

Interlock settings are possible with the inclusion of a group setting.
(Joint use of the air conditioner remote controller and Lossnay remote controller is possible.)

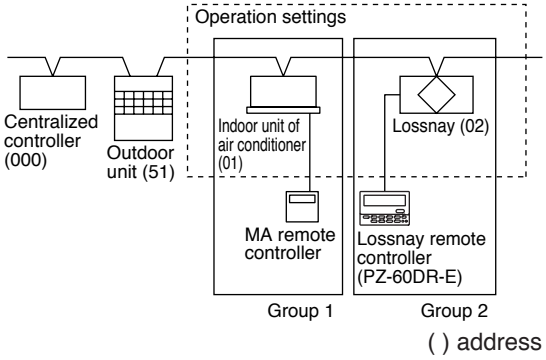

● Applicable indoor units are C type or later (for use with MA remote controller) models
● Set the different groups of indoor unit of air conditioner and Lossnay unit.

Use Lossnay remote controller **PZ-60DR-E**.
(Do not use PZ-41SLB-E).

Lossnay transmission connection terminal

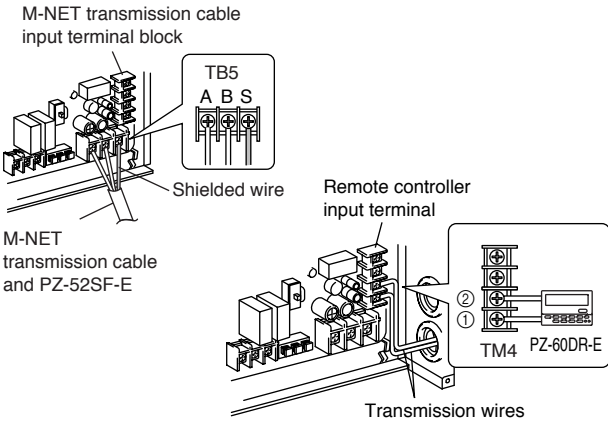

Address Setting

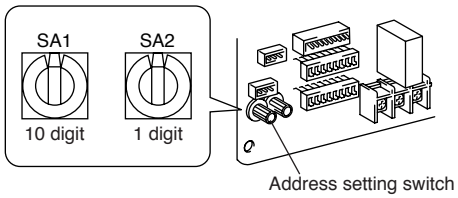

● When the address number has been changed, the data in the memory is automatically reset.

4.3 System Selection

Interlocked with City Multi (Refer to page C-14)

Lossnay operation when indoor unit is stopped	○
Lossnay stopping when indoor unit is operating	○
Switching Lossnay fan speed	
When interlocked with indoor unit for compatibility with both R22, R407C and R410A	High/Low
When interlocked with indoor unit for other than the above	Fixed to high
Ventilation mode	Fixed to automatic
Filter maintenance indicator	○
Lossnay error indicator	○
Delayed operation	○
External control operating mode selection	×
Number of indoor units for interlocked group setting with one Lossnay unit	16 units
Number of Lossnay units for interlocked group setting with one indoor unit	One unit

* All Lossnay functions including Extra-Low fan speed can be controlled from PZ-60DR-E.

Incase of PZ-60DR-E

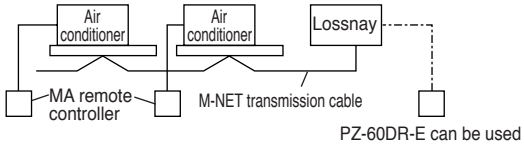

Incase of PZ-52SF-E

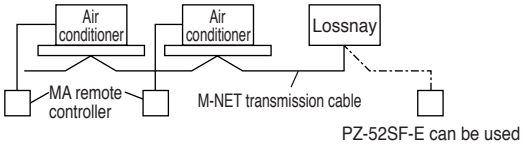

Interlocked with Mr. Slim (Refer to page C-13)

When using A-control remote controller	
Lossnay operation when indoor unit is stopped	○
Lossnay stopping when indoor unit is operating	×
Lossnay fan speed switching	High/Low
Other common items	
Lossnay error indicator	×
Ventilation mode	Fixed to automatic
Filter maintenance indicator	×
Delayed operation	○
External control operating mode selection	×
Number of indoor units for interlocked group setting with one Lossnay unit	One unit
Number of Lossnay units for interlocked group setting with one indoor unit	One unit

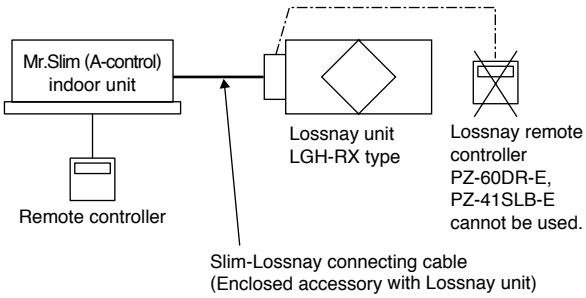

Independent Lossnay Unit (Not interlocked with City Multi or Mr. Slim systems.) (Refer to page C-11)

Start/Stop	○
Fan speed switching	High/Low/Extra Low
Ventilation mode	Heat ex. / By-pass/ Auto
Filter maintenance indicator	○
Lossnay error indicator	○
Delayed operation	○
External control operating mode selection	○
Number of Lossnay units	15 units
Number of remote controllers	Two units

* All Lossnay functions including Extra-Low fan speed can be controlled from PZ-60DR-E.

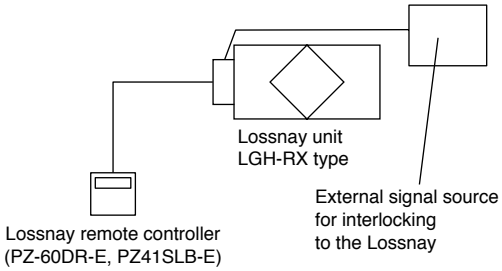

Interlocked with external device (BMS) (Refer to page C-22)

Start/Stop	○
Fan speed switching	Fixed to high
Ventilation mode switching	Fixed to automatic
Filter maintenance indicator	×
Lossnay error indicator	×
Delayed operation	○
External control operating mode selection	○

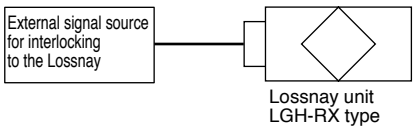

* ○ : Available
  × : Not Available

Centralized Controller System

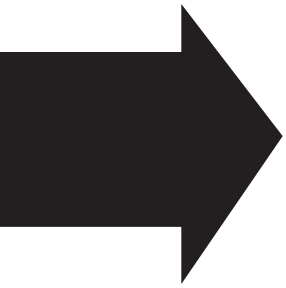

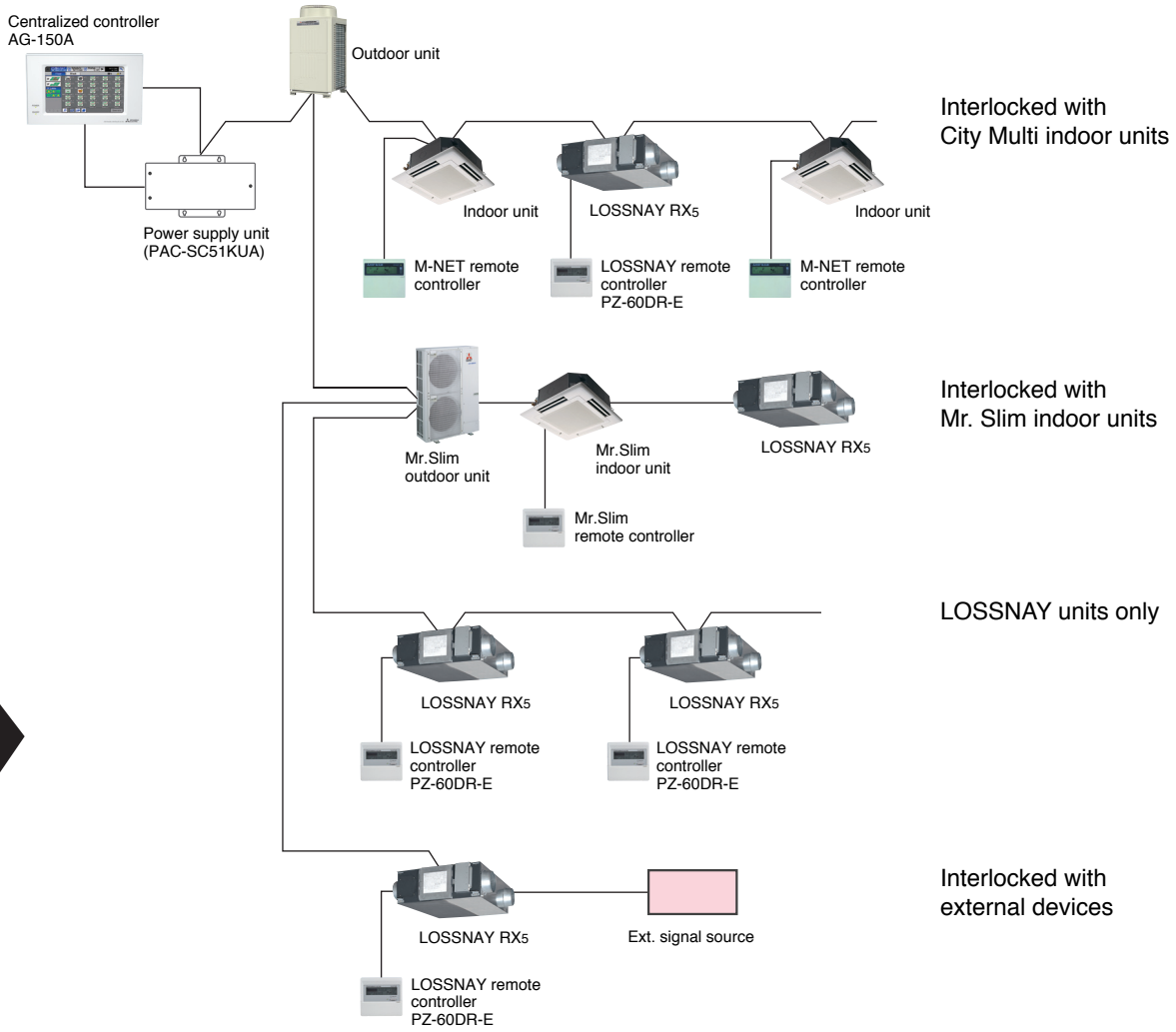

Reference: Remote controller for the Lossnay and indoor unit

Refer to the technical documentation related to the Remote controller for the indoor unit.

Remote controllers for Lossnay unit

Lossnay remote controller (PZ-60DR-E)

*non M-NET protocol

Advanced Lossnay remote controller.

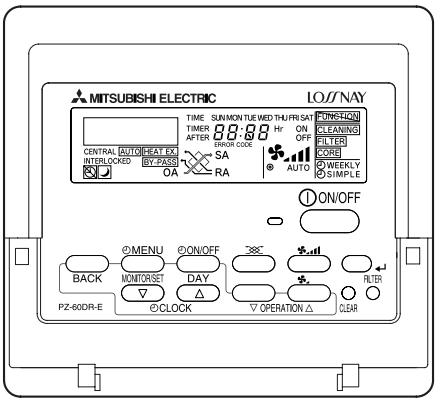

Lossnay remote controller (PZ-41SLB-E)

*non M-NET protocol

With Lossnay interlock switches and indicators.

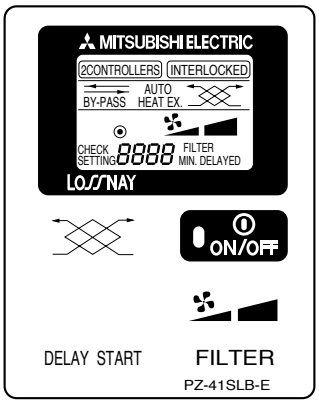

Lossnay M-NET remote controller (PZ-52SF-E)

Without Lossnay interlock switches and indicators.

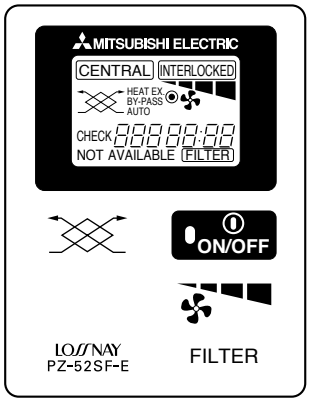

Remote controllers for City Multi indoor unit

MA remote controller (PAR-21MAA)

*non M-NET protocol

With Lossnay interlock switches and indicators.

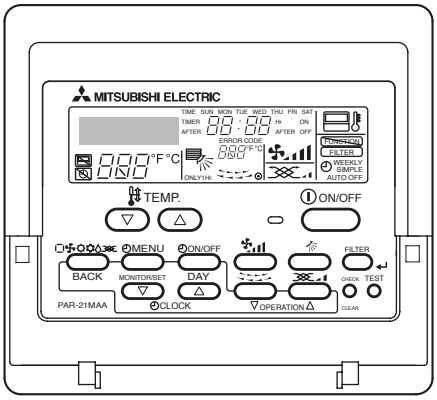

ME remote controller (PAR-F27MEA)

Without Lossnay interlock switches and indicators.

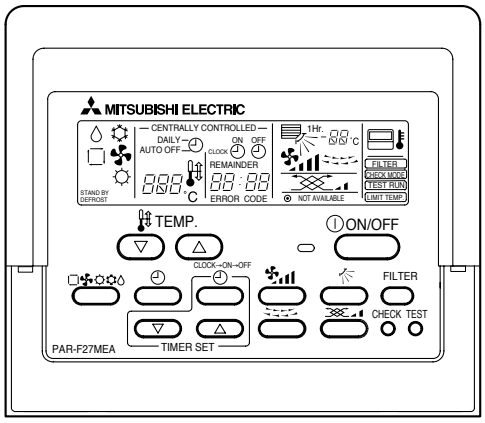

Remote controllers for Mr. Slim indoor unit

PAR-21MAA

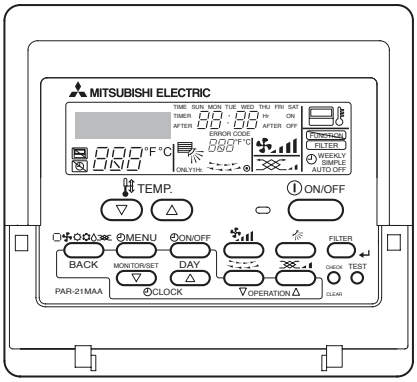

4.4 Basic System

4.4.1 System Summary

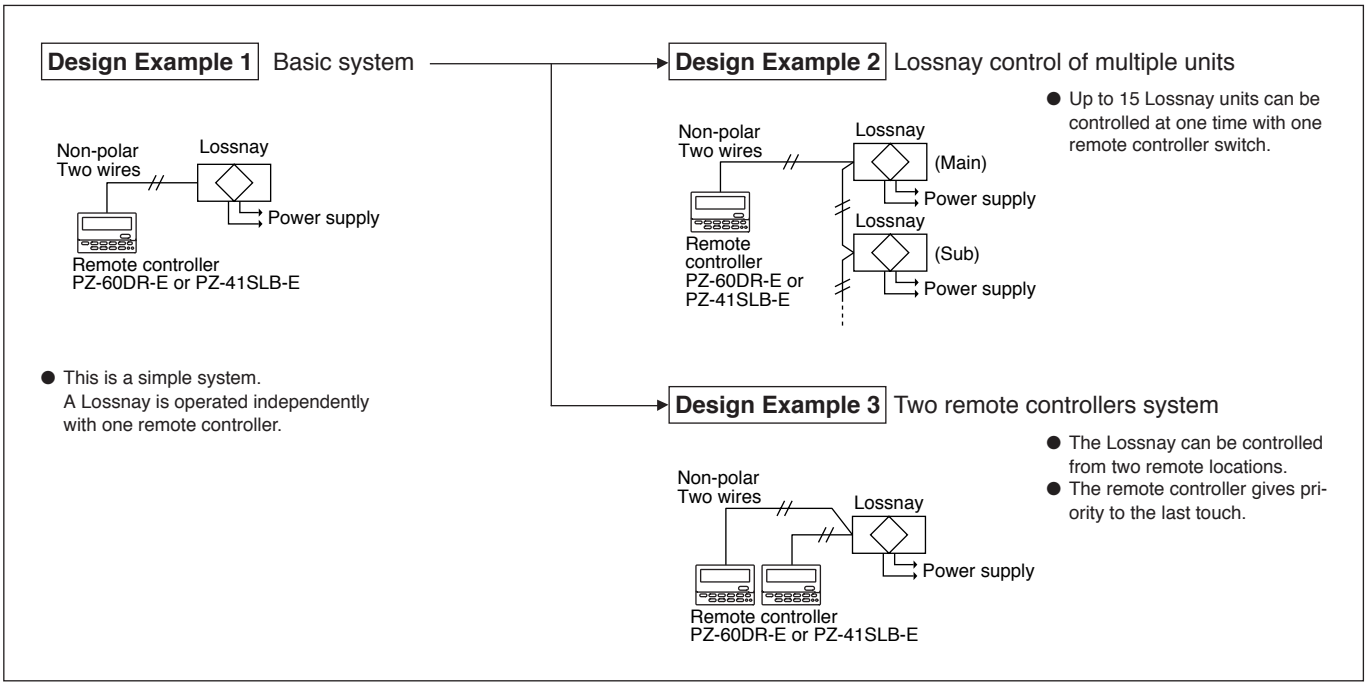

4.4.2 Operation of Multiple Units

Feature	One remote controller can operate from one to 15 Lossnay units. PZ-60DR-E has many functions.such as Extra-Low fan speed, however, PZ-41SLB has limited function.
Ordered part	Remote controller PZ-60DR-E, PZ-41SLB-E
Notes	• Also connect the power to the second and following Lossnay units. • The maximum extension of the transmission cable is 500 m or less (between Lossnay and remote controller switch, between Lossnay and Lossnay). • The main or Sub setting on the Lossnay is necessary.

When operating multiple Lossnay units

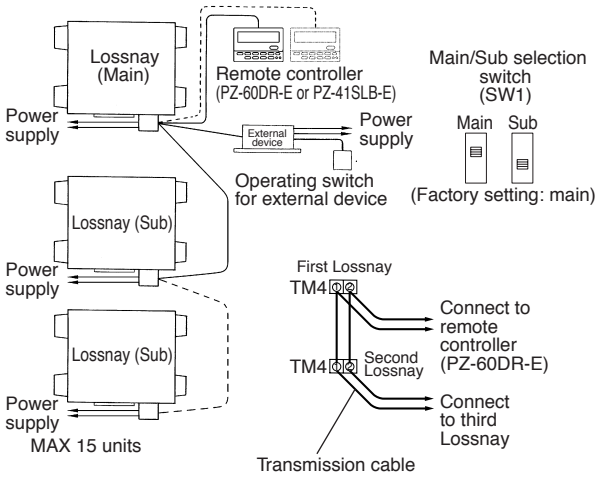

(1) Connect from Lossnay Unit 1 to Lossnay Unit 2, and from Unit 2 to Unit 3 and so on up to a maximum of 15 units using a transmission cable (PVC insulated PVC jacketed and either between 0.65 and 1.2, or between 0.3 mm^2 and 1.25 mm^2 in cross section).

(2) Change the setting on the main/sub switch (SW1) on the second and subsequent Lossnay units to “Sub”.

CAUTION:

Don’t tighten screws of terminal block with a torque larger than 0.5 Nm. It could damage the PCB.

Note:

- Up to four 0.3 mm^2 stranded wires or ϕ 0.65 PVC wires can be connected to one input terminal.
- For other types of wire, up to two can be connected.
- The operation signal and pulse signal can be connected to the external device of the main Lossnay only.
- Connect the power to each respective Lossnay unit.
- When the LGH-150RX5 and LGH-200RX5 types are connected, they operate at low fan speed even if extra low fan speed is selected.

4.4.3 Operation with two Remote controllers

Characteristics	Remote controller	Note
• Lossnay can be operated from two remote locations. • Lossnay conditions can be checked from two remote locations. • The remote controller gives priority to the last touch.	Lossnay remote controller PZ-60DR-E, PZ-41SLB-E	• Use only up to two remote controllers (Operation will not go normally if three remote controller switches are connected.)

System Example

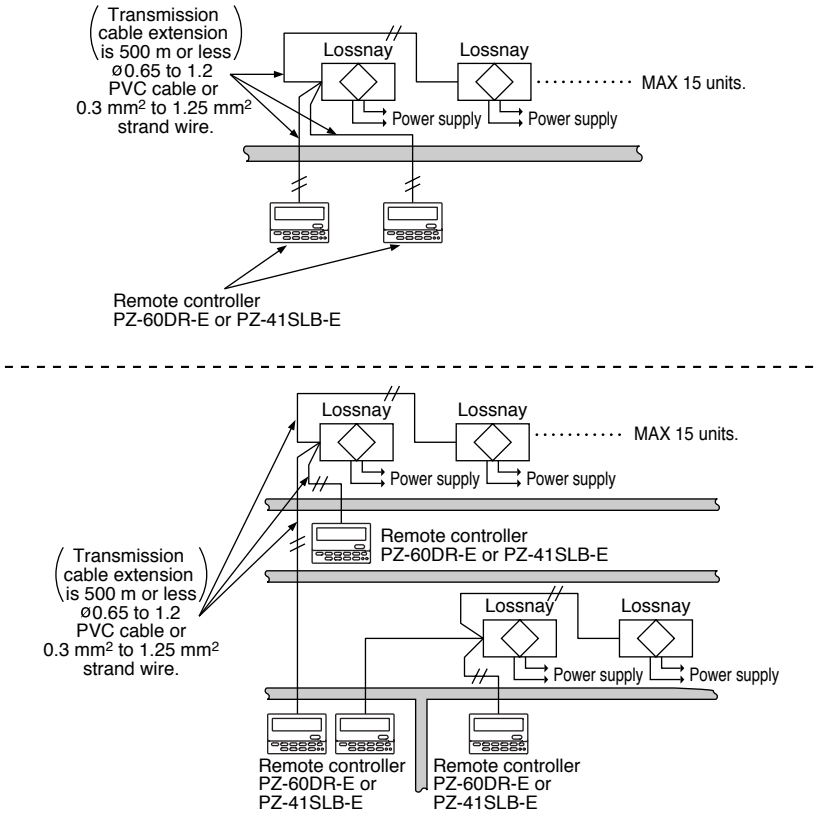

Operation Method

The operation is the same with each remote controller. In this case, the Lossnay gives operating priority to the last button push.

4.5 Interlocking with Mr. Slim

4.5.1 Interlocked Mr. Slim and Lossnay System

Features

● It is possible to Interlock Mr. Slim indoor units with Lossnay operation.

System Example

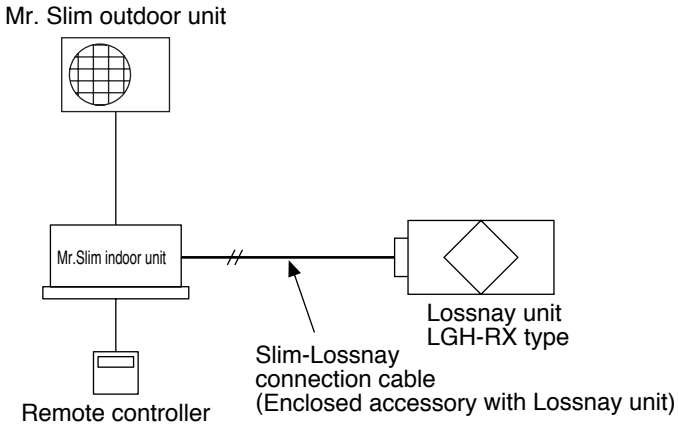

Lossnay Function Table (Interlocked settings)

Item	Details
Number of indoor units that can be set to interlocked operation with one Lossnay unit in each group	One unit
Number of Lossnay units that can be set to interlocked operation with one indoor unit	One unit
Operation of Lossnay unit only (When indoor unit is stopped)	Possible
Independent Lossnay unit start and stop (When indoor unit is operating)	Not possible
Delayed operation (Optional setting)	30 minutes delayed operation of Lossnay when indoor unit cooling/heating operation is started (Lossnay Dip-SW setting).
Switching fan speed	High/Low
Ventilation mode	Fixed to automatic
Filter indicator	Not possible
Error	Not possible
Restrictions and precautions	* The Lossnay remote controller (PZ-60DR-E, PZ-41SLB-E) cannot be used on systems interlocked with Mr. Slim.

4.6 Combining with City Multi

4.6.1 Independent Lossnay System with Lossnay M-NET Remote Controller and MELANS

Features

- The Mitsubishi Electric air-conditioner network system (MELANS) can operate and monitor each group of Lossnay units and City Multi indoor units.
- Can also use the Lossnay M-NET remote controller to operate.

System Examples: 1 (Lossnay Non M-NET Remote Controller PZ-60DR-E)

The following groups can be configured.

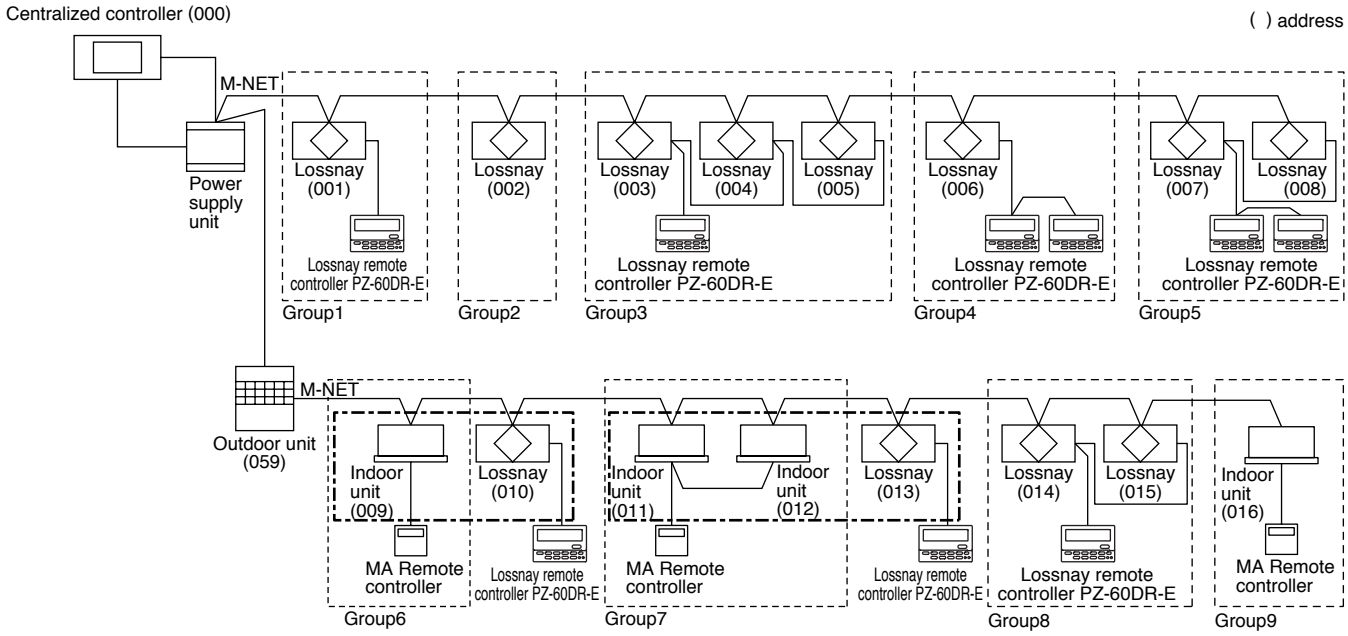

Group 1	:	One Lossnay unit and one Lossnay remote controller.
Group 2	:	Without a Lossnay remote controller.
Group 3	:	Multiple Lossnay units and one Lossnay remote controller.
Group 4	:	One Lossnay unit and two Lossnay remote controllers.
Group 5	:	Multiple Lossnay units and two Lossnay remote controllers.
Group 6	:	One Lossnay unit is interlocked to one indoor unit(PZ-60DR-E is not necesally).
Group 7	:	One Lossnay unit is interlocked to multiple indoor units(PZ-60DR-E is not neccesally).
Group 8	:	Multiple Lossnay units connected to indoor unit transmission cable side and one Lossnay remote controller.
Group 9	:	Without Lossnay units.

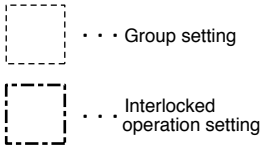

Caution:

- Hard wire connection from PZ-60DR-E is required independent from M-NET line. If change the Group setting in the future, it is required to change the wiring of PZ-60DR-E.
- In this application, Lossnay remote controller PZ-41SLB-E cannot be used.

System Examples: 2 (Lossnay M-NET Remote Controller PZ-52SF-E)

The following groups can be configured.

- Further information please refer LGH-RX4 Technical Manual.

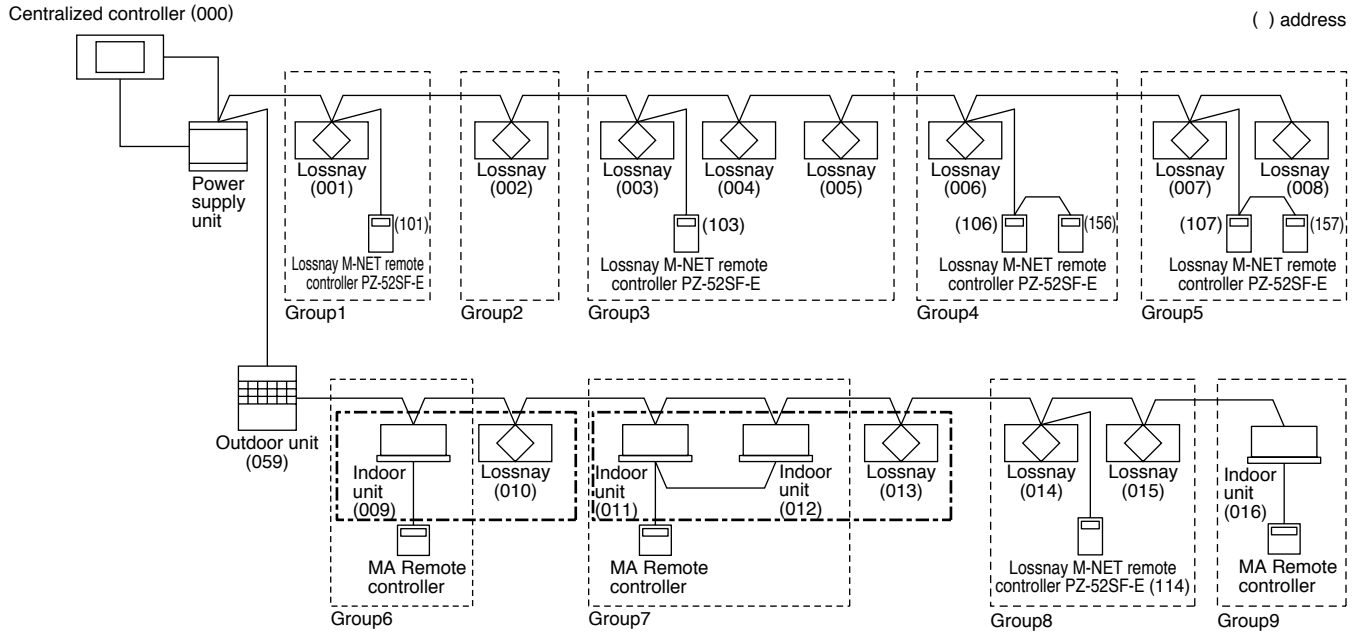

Group 1	:	One Lossnay unit and one Lossnay M-NET remote controller.
Group 2	:	Without a Lossnay M-NET remote controller.
Group 3	:	Multiple Lossnay units and one Lossnay M-NET remote controller.
Group 4	:	One Lossnay unit and two Lossnay M-NET remote controllers.
Group 5	:	Multiple Lossnay units and two Lossnay M-NET remote controllers.
Group 6	:	One Lossnay unit is interlocked to one indoor unit.(PZ-60DR-E is not necesally)
Group 7	:	One Lossnay unit is interlocked to multiple indoor units.(PZ-60DR-E is not neccesally)
Group 8	:	Multiple Lossnay units connected to indoor unit transmission cable side and one Lossnay M-NET remote controller.
Group 9	:	Without Lossnay units.

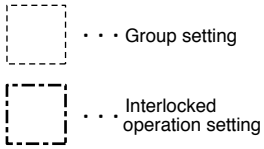

Caution:

- If change the Group setting in the future, no need to change the M-NET wiring, Just change the address setting from centralized controller.
- In this application, Lossnay remote controller PZ-41SLB-E cannot be used.

Lossnay Function Table (Group Setting)

Item	Details
Number of Lossnay remote controllers and/or MELANS remote controllers that can be connected to one Lossnay unit	Five units (Number of Lossnay remote controller(PZ-60DR-E or PZ-52SF-E) is two units max.)
Operation of two remote controllers in one group	Possible
Switching fan speed	High/Low (Extra-Low from PZ-60DR-E)
Ventilation mode	Heat exchange / By-pass / Automatic
Filter maintenance indicator	3000 hours / No display
Error	Display

Controller Function Table

Model		Local Remote				MELANS Series				
		Lossnay remote controller	Lossnay remote controller	Remote controller	Simple remote controller	Group remote controller	System remote controller	Schedule timer	ON/OFF remote controller	Centralized controller
		PZ-52SF-E (M-NET)	PZ-60DR-E	PAR-21MAA PAR-F27MEA	PAC-SE51CRA PAC-YT51CRA	PAC-SC30GRA	PAC-SF44SRA	PAC-YT34STA	PAC-YT40ANRA	AG-150A
No. of controllable (Groups/Units)		1 Group/16 Units	1 Group/15 Units	Not applicable with non-interlocked Lossnay units			50 Group/50 Units	50 Group/50 Units	16 Group/50 Units	50 Group/50 Units
Operation	Start/Stop	○	○				◎	◎	◎	◎
	Switching air volume	○	○				◎	×	×	◎
	Switching Ventilation mode	○	○				◎	×	×	◎
	Priority instructions to local remote controller (Local permitted)	×	×				◎	△*1	×	◎
Monitoring	Status (Operation/Stop)	○	○				◎	◎	◎	◎
	Switching air volume	○	○				○	×	×	○
	Ventilation mode	○	○				○	×	×	○
	Error	○	○				◎	◎	○	◎
	Error information	○	○				◎	◎	×	◎
	Filter maintenance indicator	○	○				○	×	×	○
	Local permitted	○	○				○	×	×	○
Scheduling/ Recording	Weekly	×	○				×	○	×	○
	Stop/Starts per day	×	16				×	16	×	24
	Stop/Starts per week	×	112				×	112	×	24x7*2
	Minimum setting (minutes)	×	1				×	5	×	1
	Error record	×	○				○	×	×	○

Switches and display

◎ : Group/batch
○ : Group only (or function available)
△ : Available under some condition
× : Not available
*1 Available as a scheduled operation
*2 You can set a schedule for the year and a weekly schedule for individual seasons.

- For details about the operation and display of the Lossnay remote controller (PZ-60DR-E), Refer to page C-78.
- For details about the operation and display of the Lossnay M-NET remote controller (PZ-52SF-E), Refer to page C-92.
- For details about the operation and display of the centralized controller (AG-150A), Refer to page C-93.

4.6.2 City Multi and Lossnay Interlocked System

Characteristics

- It is possible to interlock City Multi indoor units with Lossnay operation.
- Independent Lossnay operation can also be performed using MA remote controller or ME remote controller.
- Non M-NET Lossnay remote controller PZ-60DR-E can be used with any Lossnay units in this application.

System Examples

The following groups can be configured.

Single Refrigerant System

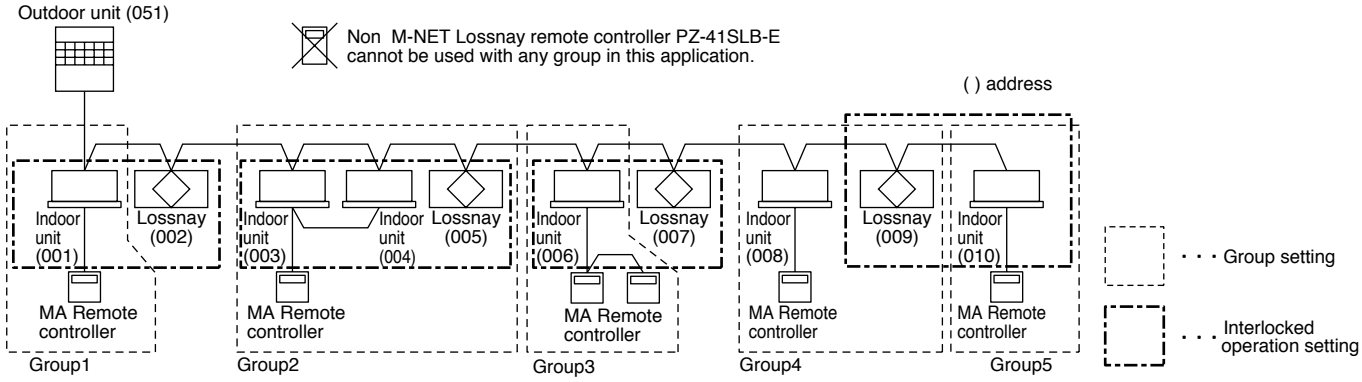

Group 1	:	One Lossnay unit is interlocked to one indoor unit.
Group 2	:	One Lossnay unit is interlocked to multiple indoor units.
Group 3	:	One indoor unit with two remote controllers is interlocked to one Lossnay unit.
Group 4, 5	:	Multiple groups are interlocked to one Lossnay unit.

Multiple Refrigerant Systems

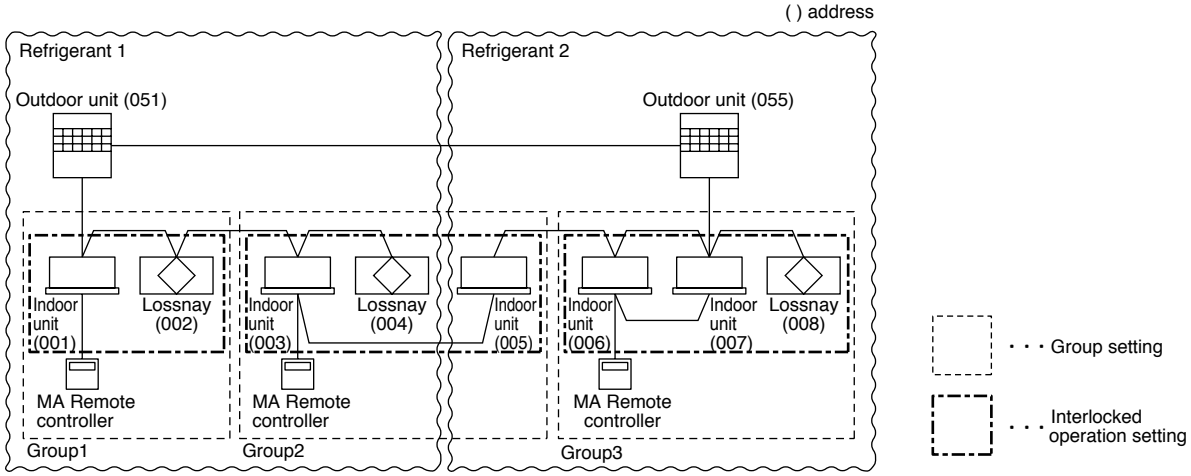

Group 1	:	One Lossnay unit is interlocked to one indoor unit.
Group 2	:	One Lossnay unit is interlocked to multiple indoor units (with different refrigerants).
Group 3	:	One Lossnay unit is interlocked to multiple indoor units (with same refrigerant).

Lossnay Function Table (Interlocked Settings)

Item		Details
Number of indoor units that can be set to interlocked operation with one Lossnay unit in each group		16 units per group
Number of Lossnay units that can be set to interlocked operation with one indoor unit		one unit
Independent Lossnay start/stop operation		Possible
Delayed operation (Optional setting by Lossnay PCB)		30-minutes delayed operation when indoor unit cooling/heating operation is started
Fan speed switching	Indoor unit compatible with both R22, R407C and R410A	High/Low
	Units other than the above	Fixed to high
Ventilation mode		Fixed to automatic
Filter maintenance indicator		3000 hours / No display
Error		Display
Restrictions and precautions		* Lossnays cannot be interlocked to the indoor units using K-transmission converter.

Note:

- In case of PZ-60DR-E is installed, additional function is available.

Lossnay Controller Function Table

Model		Local Remote				MELANS Series				
		Lossnay remote controller	Lossnay remote controller	Remote controller	Simple remote controller	Group remote controller	System remote controller	Schedule timer	ON/OFF remote controller	Centralized controller
		PZ-52SF-E	PZ-60DR-E	PAR-21MAA PAR-F27MEA	PAC-SE51CRA PAC-YT51CRA	PAC-SC30GRA	PAC-SF44SRA	PAC-YT34STA	PAC-YT40ANRA	AG-150A
No. of controllable (Groups (G)/Units)		1 Group/16 Units	1 Group/15 Units	1 Group/16 Units	1 Group/16 Units	8 Group/16 Units	50 Group/50 Units	50 Group/50 Units	16 Group/50 Units	50 Group/50 Units
Operation	Start/Stop	○	○	○	○	◎	◎	◎	◎	◎
	Switching air volume	○	○	○	×	○	○	×	×	○
	Switching ventilation mode	○	○	×	×	×	×	×	×	×
	Prohibit Local	×	×	×	×	×	◎	△*2	×	◎
Monitoring	Status (Operation/Stop)	○	○	○	×	○	△*1	◎	◎	◎
	Switching air volume	○	○	○	×	○	×	×	×	○
	Ventilation mode	○	○	×	×	×	×	×	×	×
	Error	○	○	○	○	◎	◎	◎	◎	◎
	Error information	○	○	○	○	◎	◎	◎	×	◎
	Filter maintenance indicator	○	○	○	×	○	○	×	×	○
	Permit/Prohibit for remote control	×	○	○	○	○	○	×	×	○
Scheduling/Recording	Weekly	×	○	×	×	×	×	○	×	○
	Stop/Starts per day	×	16	2	×	×	×	16	×	24
	Stop/Starts per week	×	112	×	×	×	×	112	×	24x7*3
	Minimum setting (minutes)	×	1	10	×	×	×	5	×	1
	Error record	×	○	×	×	×	○	×	×	○

Switches and display

◎ : Group/batch
○ : Group only (or function available)
△ : Available under some condition
× : Not available

*1 Does not display which interlocked Lossnay unit is operating in which group
*2 Available as schedule operation
*3 You can set a schedule for the year and a weekly schedule for individual seasons.

- For details about the operation or display of the remote controller (PAR-F27MEA, PAR-21MAA), please refer to the specific remote controller manuals.

4.6.3 MA Remote Controller/ME Remote Controller in Combination with Lossnay Non-M-NET Remote Controller (PZ-60DR-E)

System

Combining MA, ME and Lossnay Non M-NET remote controllers is permitted.

- In case of combination with Lossnay M-NET remote controller (PZ-52SF-E) please refer LGH-RX4 Technical Manual.

Combining Indoor Unit of Air Conditioner Remote Control and Lossnay Remote Control

Indoor Unit	Lossnay LGH-RX5 type
Model for MA remote control (Type C or later)	◯
Model for other than MA remote control (Type B or earlier)	×

◯ : Compatible × : Incompatible

System Examples: 1

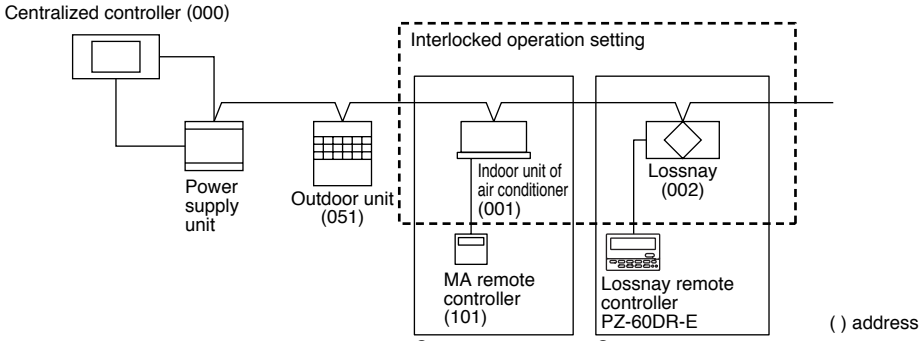

Setting Method

(1) Make the Group setting for the indoor unit.
(2) Make the Group setting for the Lossnay unit.
(3) Set the indoor unit and Lossnay unit for interlocked operation.
When using the centralized controller, make both the Group setting and operation setting with centralized controller.

Characteristics

(1) When the indoor unit is set for interlocked operation in one group:
Interlocked Lossnay operation is possible with indoor unit remote controller. In this case, operation can switch between High/Low/Off. It is possible to switch Lossnay operation only between High/Low/Off with the indoor unit remote controller.
It is possible to controll the Lossnay unit from Lossnay remote controller PZ-60DR-E. More additional function such as Extra Low fan speed is available.

(2) When two or more indoor units in different groups are set for interlocked operation, the Lossnay will operate if at least one group operates. The Lossnay will stop operation if all groups stop operation.
It is possible to switch the Lossnay only between High/Low when other groups are operating with indoor unit remote controller.
It is possible to controll the Lossnay unit from Lossnay remote controller PZ-60DR-E. More additional function such as Extra Low fan speed is available.

Note:

- If the display on the MA, ME or other indoor unit remote controllers is cancelled, the indoor unit remote controller will not show the ventilation display even if Lossnay is operating via the Lossnay remote controller PZ-60DR-E.

Note:

Power supply limitation of transmission cable for indoor unit.

- Indoor units + ME remote controllers (compact remote controllers) is less than or equal to 40 units.
- Indoor units are less than or equal to 20 units.
(MA remote controllers and Lossnay units are not included in the 20 units, listed above.)

System Examples: 2

A sophisticated system including City Multi can also be configured.

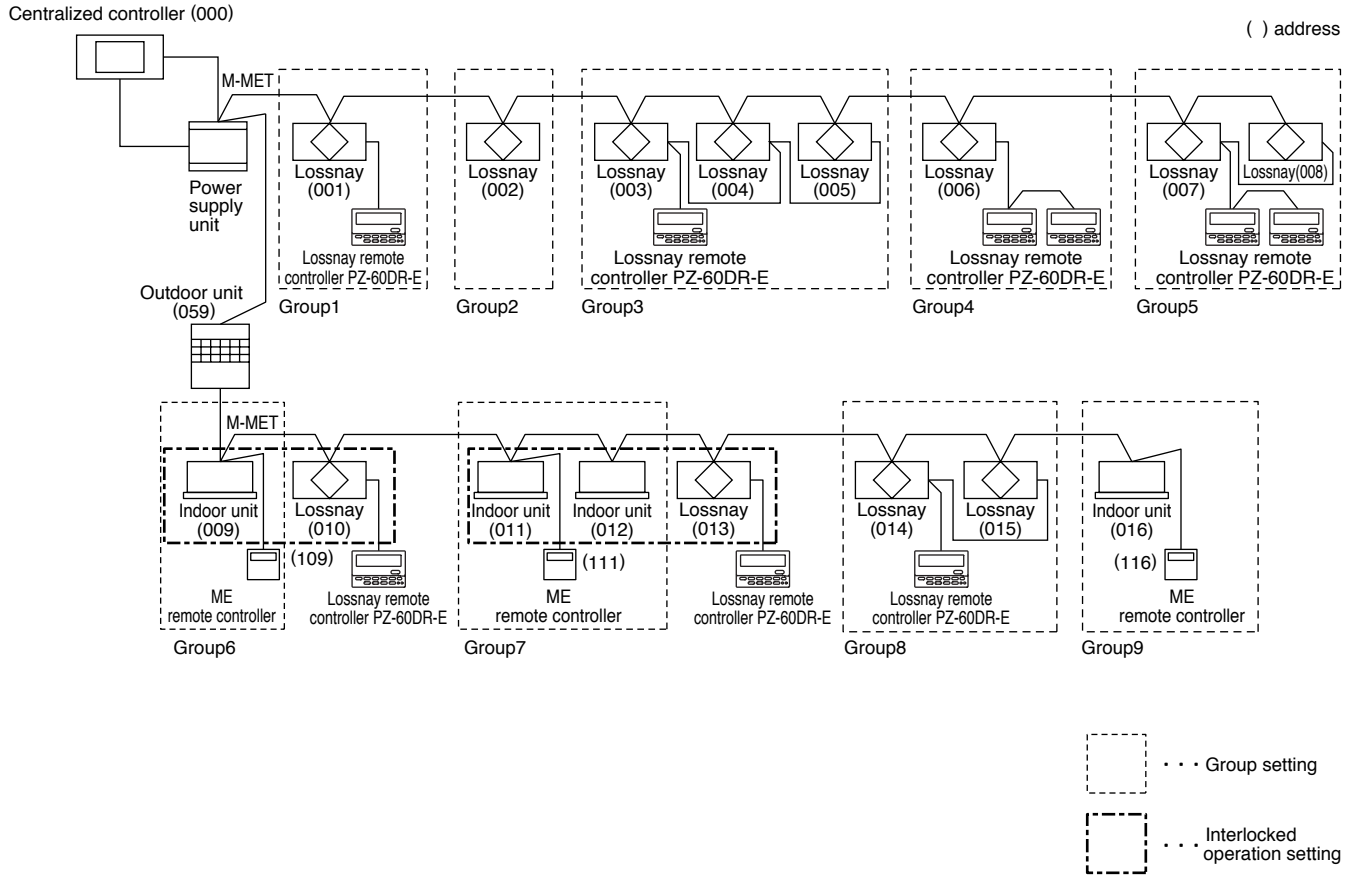

Group 1	:	One Lossnay unit and one Lossnay remote controller.
Group 2	:	Without Lossnay remote controller.
Group 3	:	Multiple Lossnay units and one Lossnay remote controller.
Group 4	:	One Lossnay unit and two Lossnay remote controllers.
Group 5	:	Multiple Lossnay units and two Lossnay remote controllers.
Group 6	:	One Lossnay unit is interlocked to one indoor unit. (PZ-60DR-E is not necessary)
Group 7	:	One Lossnay unit is interlocked to multiple indoor units. (PZ-60DR-E is not necessary)
Group 8	:	Multiple Lossnay units connected to an indoor unit transmission cable and one Lossnay remote controller.
Group 9	:	Without Lossnay units.

Note:

- Hard wire connection from PZ-60DR-E is required independent from M-NET line. If change the Group setting in the future, it is required to change the wiring of PZ-60DR-E.
- Do not use Lossnay remote controller PZ-41SLB-E.

4.6.4 When Using the LONWORKS® Compatible Adaptor (LMAP02-E) to Connect to LONWORKS®

By using the LON® adaptor (model name: LMAP02-E) to connect to LONWORKS®, it is possible to control and observe Lossnay operation on a building management system.

* For specifications and functions of the LON® adaptor, refer to the materials regarding the LONWORKS® compatible adaptor.

Table of Functions

	Contents	Individual Lossnay (Lossnay not set for interlocked operation)	Interlocked Lossnay (Lossnay set for interlocked operation with City Multi)
Operation	ON/OFF	◯	×
	Switch fan to High/Low	◯	×
	Switch ventilation mode	◯	×
	Prohibit local ON/OFF operation	◯	×
Monitoring	Operation condition	◯	×
	Fan speed	◯	×
	Ventilation mode (conditions)	◯	×
	Errors	◯	◯
	Filter maintenance indicator	◯	×
	Prohibit local ON/OFF operation	◯	×

◯ : Available ×: Not Available

System Example

(Using M-NET)

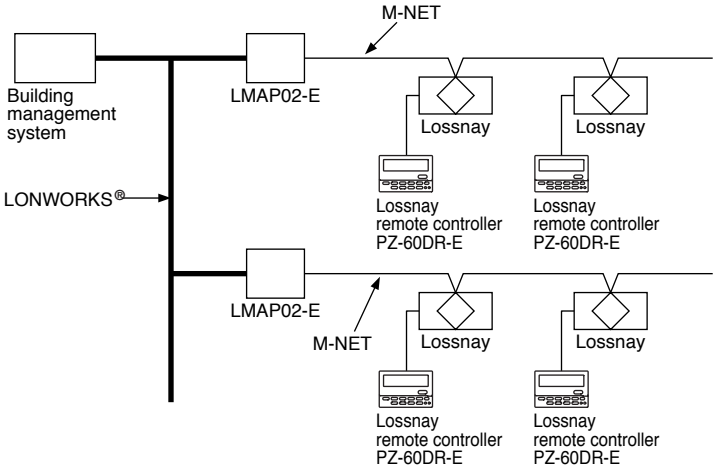

Connect the M-NET transmission cable to TB5 A,B of the Lossnay terminal block. (Refer to page C-71).
The Lossnay remote controller (PZ-41SLB-E) cannot be used with this system.
Up to 50 units can be connected with one LMAP02-E.
For details about the system or connection cables of the LMAP02-E, refer to its technical materials.

* LONWORKS® is a registered international trademark, registered in the U.S.A. to the Echelon Corporation.

5. Examples of Applications Using Various Input and Output Terminals

Various applications are possible by using the input/output terminals and connectors as shown below.

Input/Output Specifications

	Terminal	Specification	Page
1	External control input terminal block for start/stop the Lossnay unit (TM2 ① ② ③)	TM2 is the input terminal block for start/stop the Lossnay unit using external equipment, such as a Mr. Slim (A-control) indoor unit or the BMS (Building Management System). Use voltage (12V-24V DC) or uncharged a-contact for signal input. (Both voltage and no-voltage signals are compatible with pulse input; a pulse signal duration of 200 ms or more is needed. Set DIP switch 2-2 to ON.)	C-26/C-27 C-28/C-73
2	Lossnay operation monitor output terminal block or Output delay function 1 (TM4 ⑨ ⑩)	Output terminal during Lossnay unit operation. (uncharged a-contact signal output.) Output delay function 1 is possible by DIP switch 2-8 Contactor rating: Max 240V AC, 2A 24V DC, 2A Min 220V AC, 100mA 5V DC, 100mA	C-26/C-27 C-70/C-74
3	Lossnay malfunction monitor output terminal block (TM3 ⑦ ⑧)	Output terminal during Lossnay unit malfunction. (uncharged a-contact signal output.) Contactor rating: Max 240V AC, 1A 24V DC, 1A Min 220V AC, 100mA 5V DC, 100mA	C-26/C-27
4	By-pass monitor output terminal block or Output delay function 2 (TM3 ⑥ ⑦)	Output terminal during Lossnay unit malfunction. (uncharged a-contact signal output.) Output delay function 2 is possible by DIP switch 5-6 Contactor rating: Max 240V AC, 1A 24V DC, 1A Min 220V AC, 100mA 5V DC, 100mA	C-26/C-27 C-75
5	External control input connector for By-pass (CN 16)	Input connector for switching By-pass. Establish the wire connection by inserting the optional remote display adaptor (PAC-SA88HA-E) in the connector CN16 (Ventilation mode selector).	C-28/C-29 C-70
6	External control input connector for fan speed (CN 16)	Input connector for switching Hight/Low/Extra-Low fan speed. Using marketed CO_2 sensor, etc., make connection by inserting the optional remote display adaptor (PAC-SA88HA-E) in the connector CN16.	C-28/C-70

Lossnay Main/Sub Setting

If multiple Lossnay system begin operation by one signal from an indoor unit of air conditioner or the like, make sure the unit connected to the signal cable from the indoor unit of air conditioner is set to “Main,” and all the others are set to “Sub.”

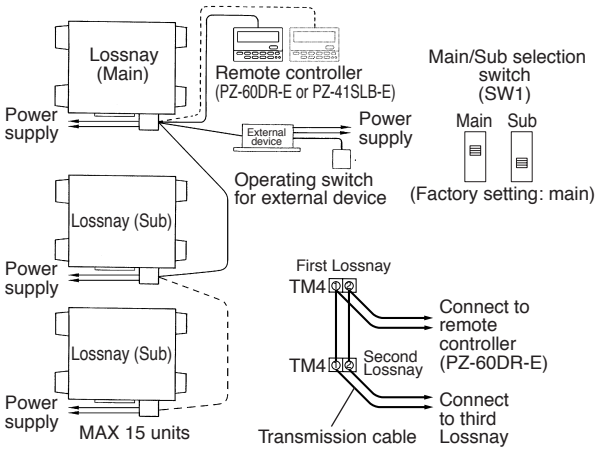

5.1 External Control Operating Mode Selection

There are four modes when operating using signals from external equipment.

1. ON/OFF interlock (the chosen function from either external signal or remote control switch has priority)
2. ON interlock
3. OFF interlock
4. External priority ON/OFF interlock

Operating Signal

Mode	When external signal is level signal.	When external signal is pulse signal. (Optional setting)
ON/OFF inter-lock	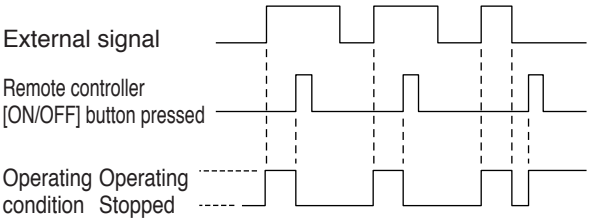	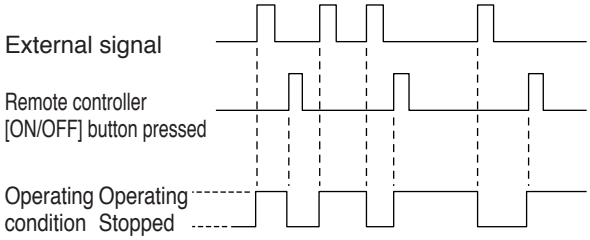
ON inter-lock	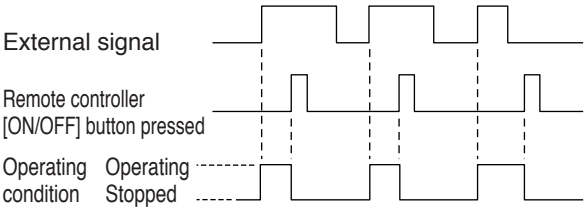	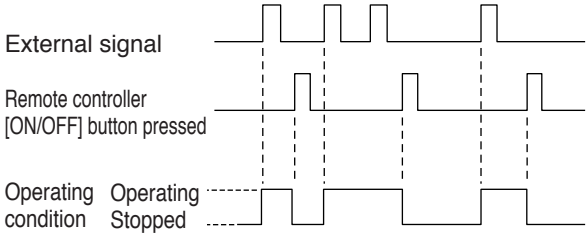
OFF inter-lock	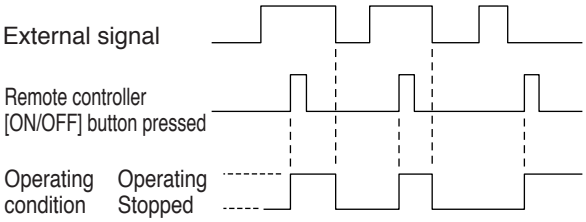	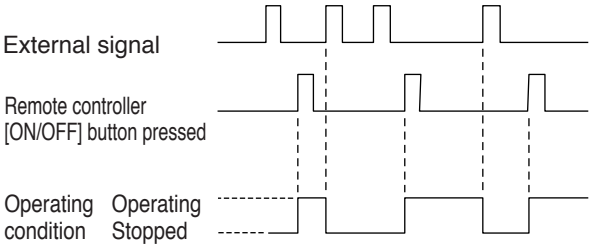
External priority ON/OFF inter-lock	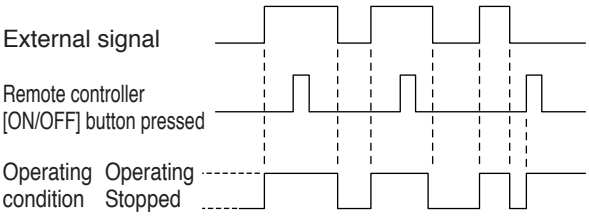	This mode does not exist.

Setting Method

When PZ-41SLB-E is used, use the remote controller to set. (Refer to page C-91)
When PZ-41SLB-E is not used, use the DIP switch 5-7,8 to set. (Refer to page C-76)

5.2 Delayed Interlocked Operation

It is possible to delay operation of the Lossnay if an external device is operating. (Energy saving capability.)

<When PZ-41SLB-E is used> (Refer to page C-91, Remote controller to be set)

- Choose from 10, 20, 30, 40, 50, and 60 minute delayed Lossnay operation.
- Delayed operation does not occur if the Lossnay operation was cancelled within the last two hours.
  (When turned off for a short time, during a lunch break, for example, if the direction to restart operation is given within two hours, the Lossnay will restart immediately.)
- If an operation button is pressed on the remote controller while the delay timer is operating, the delayed operation is cancelled and normal operation begins.

<When PZ-41SLB-E is not used>

Delays Lossnay operation for 30 minutes.when City Multi or Mr.Slim starts operating or when a external device starts operating. (Refer to page C-74)

5.3 Multiple External Device Operation (PZ-60DR-E, PZ-41SLB-E, M-NET)

When there are multiple air conditioners or other external devices		
Characteristics	**Ordered parts**	**Notes**
Lossnay operates at the same time as any of the external devices.	Remote controller	• Can receive level signal, uncharged a-contact external signals. • If the external device is a pulse signal or charged signal, multiple connections cannot be made.

System Example

When the Operation Signal is a Uncharged a-contact Level Signal.

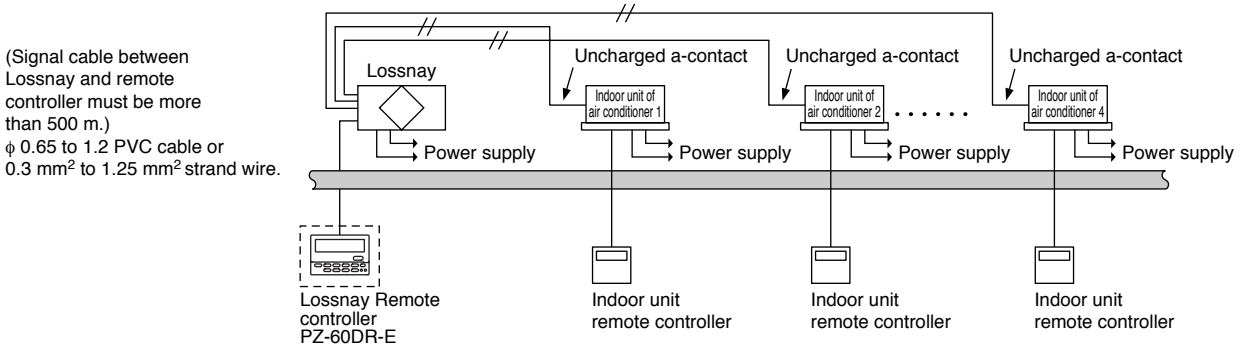

* Illustration shows an example when using PZ-60DR-E

5.4 Multiple Lossnay Units Interlocked with One Indoor Unit (M-NET only)

[Example: System 1]

Set the Main/Sub switch of the Lossnay connected to the M-NET transmission cable to “Main,” set the other Lossnay units to “Sub,” and connect ① and ② of the Lossnay remote controller (PZ-60DR-E or PZ-41SLB-E) transmission cable terminal (TM4) to the corresponding terminal on the next unit.

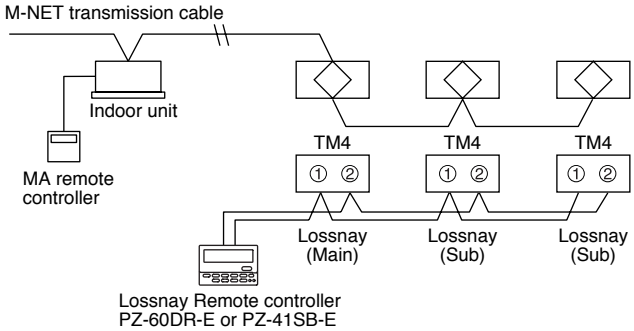

Note:

Make the setting of the first Lossnay unit and the indoor unit to be interlocked.
It is not necessary to set the address or control for other Lossnay units, directly.
Malfunctions of the Lossnay units for sub units will not appear on the remote controller.

[Example: System 2]

When you want to also monitor and manage the Sub set Lossnay malfunctions via a centralized controller, wire all of the TM4 of Lossnays, set the main/sub switch of the Lossnay of the smallest address to “Main”, and set other Lossnays at “Sub.”
From the centralized controller, set indoor unit and Lossnays group registration, respectively, and set the interlock with an indoor unit and a Lossnay of the smallest address in a group.

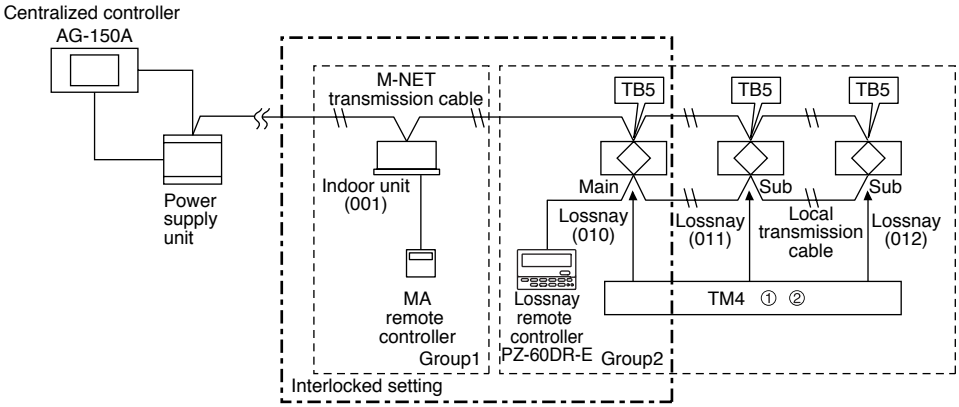

The inside of ( ) is an address number.

[Example: System 3]

Use the Lossnay remote controller to set the indoor units of air conditioner and Lossnay units to separate groups. Both interlocked operation of an indoor unit of air conditioner and Lossnay units can be performed independently by connecting the remote display output for the indoor unit and the external control input for the Lossnay unit.

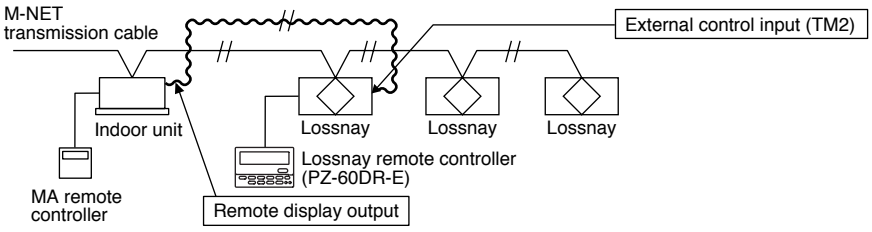

Note:

Do not make the setting of the indoor and Lossnay units to be interlocked, because the ventilation switch on the MA remote controller will become invalid, and the error indicator for the Lossnay unit will appear only on the Lossnay remote controller.

5.5 Operation monitor output (Refer to page C-70)

[Example System]

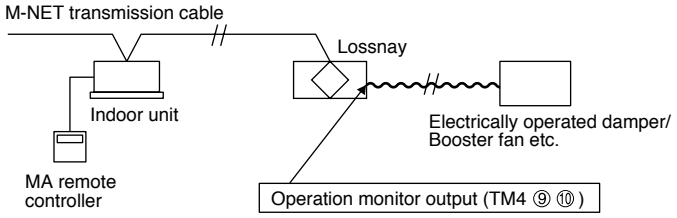

5.6 Malfunction monitor output (Refer to page C-69)

[Example System]

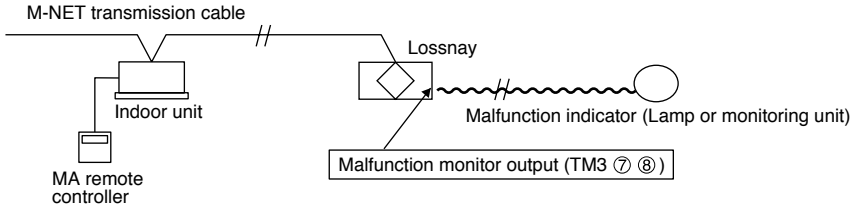

5.7 By-pass operation monitor output (Refer to page C-69)

[Example System]

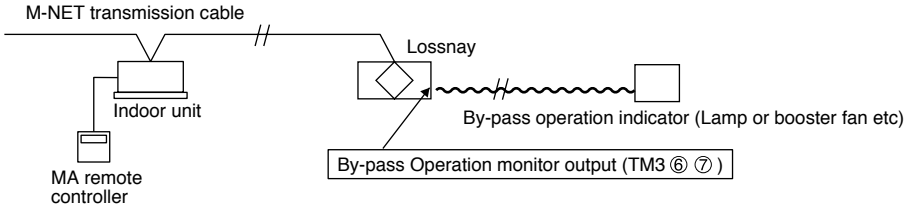

5.8 Connection Method

1. When using Mitsubishi Mr.Slim air conditioner with MA Remote controller. (Refer to page C-67)

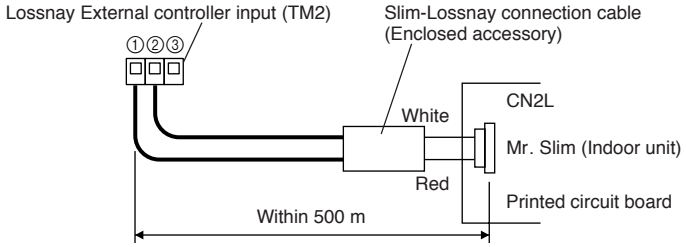

Connect the interlocking cable connector side to CN2L on the circuit board for the indoor Mr.Slim unit, then connect the lead wire side to the ① and ②. of the input terminal block (TM2) for the Lossnay external controller input. (No polarity)

2. When the external device has a charged operating signal of 12 VDC or 24 VDC. (Refer to page C-68)

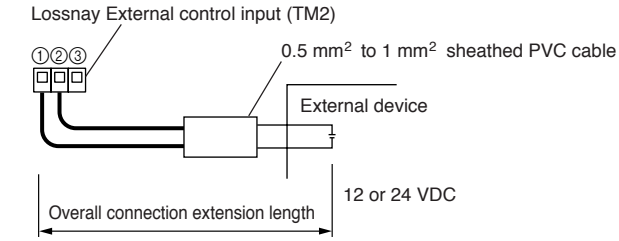

(Follow the operation manual for the external equipment.)

Connect the operating signal (wire) from the external device via the remote output to ① and ②. on the external control input terminal block (TM2). (No polarity)

3. When the external device has an uncharged a-contact signal.(Refer to page C-68)

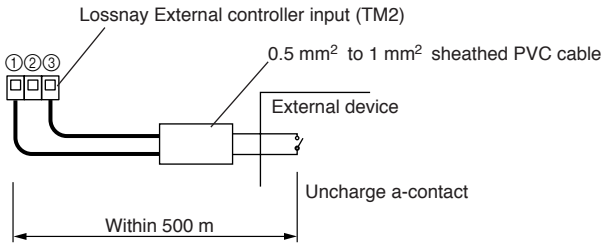

Connect the operating signal (wire) from the external device via the remote output to ① and ③ on the external control input terminal block (TM2).

Caution:

- If an optocoupler or any othe type of polar coupler is used at the uncharged a-contact, connect the positive side to ③ and the negative side to ①.

4. Multiple uncharged a-contacts.

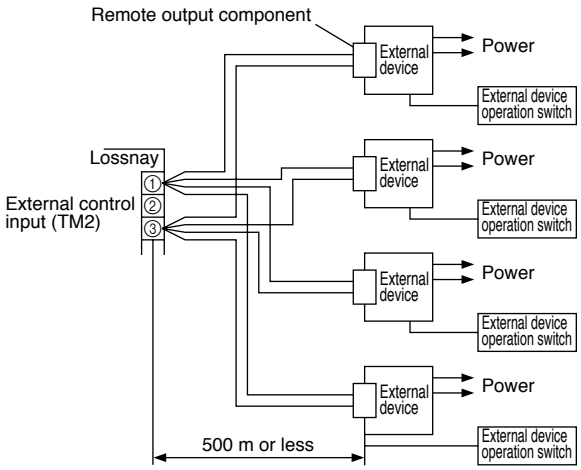

Connect the operating signal (wire) from the external device via the remote output to ① and ③ on the external control input terminal block (TM2).

Caution:

- If an optocoupler or any othe type of polar coupler is used at the uncharged a-contact, connect the positive side to ③ and the negative side to ①.

5. When connect to an Electrically operated damper, or take Operation monitor output.

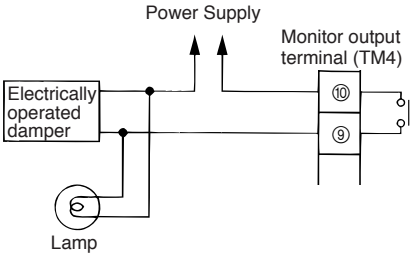

Contactor rating
Max 240 VAC, 2 A
24 VDC, 2 A
Min 220 VAC, 100 mA
5 VDC, 100 mA

Connect the power supply cable from the Electrically operated damper to ⑨ and ⑩ of the monitor output terminal block (TM4) with reference to the wire connection diagram.
Operation monitor output with delay function 1 can be possible. (Refer to function setting 6 (refer to C-74) “Setting for TM4 ⑨ ⑩”).

Note:

- Don’t tighten screws of terminal block with a torque larger than 0.5Nm. It could damage the PCB.
- Response times to external input signals are as shown in the following table.

External Signal	Response Time
Level Signal	Max. 7 sec.
Pulse Signal	Max. 200 msec

6. When take Malfunction monitor output, or take By-pass operation monitor output (Refer to page C-75)

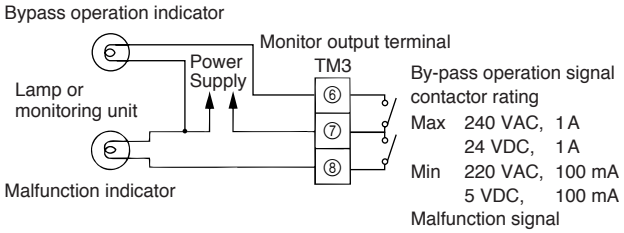

7. ON/OFF power operation without using the remote controller.

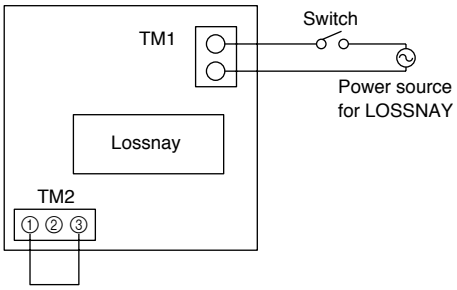

Connect as shown in the wiring diagram to the left.
When the Switch ON, the LOSSNAY unit will begin to operate.

*LOSSNAY FAN speed can be selected (High/Low) through DIP switch 2-4 and 2-5.
*Ventilation mode (LOSSNAY/By-pass) is set to automatic.

5.9 When switching High/Low/Extra-Low fan speed externally (when CO_2 sensor or other equipment is connected)

Using marketed CO_2 sensor, etc., make connection by inserting the optional remote display adaptor (PAC-SA88HA-E) in the connector CN16 (High/Low selector) as shown by the figure.

● To force High fan speed externally

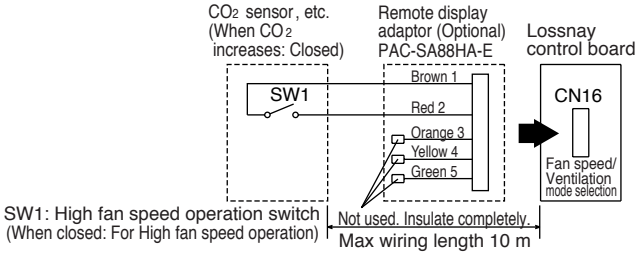

When SW1 is “ON”, fan speed of the Lossnay will be set to “High”(Extra-High) regardless of the remote control setting. Use this in such a way that it ventilates at Low or Extra-Low fan speed normally, and when the external sensor detects contamination of indoor air, it changes to High (Extra High) fan speed operation.

● To force Low fan speed externally

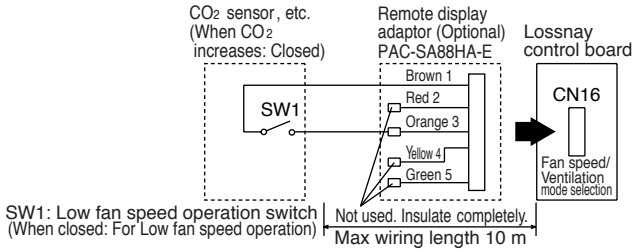

When SW1 is "ON", fan speed of the Lossnay will be set to “Low” regardless of the remote control setting.
Use this in such a way that it ventilates at High fan speed normally, and when the external sensor detect that the indoor air contamination is low, it changes to Low fan speed operation.

● To force Extra-Low fan speed externally

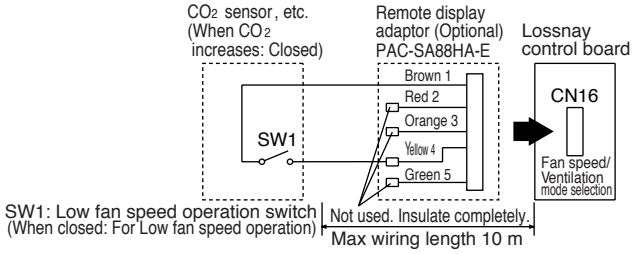

When SW1 is "ON", fan speed of the Lossnay will be set to “Extra-Low” regardless of the remote control setting.
Use this in such a way that it ventilates at High fan speed normally, and when the external sensor detects that the indoor air contamination is low, it changes to Extra-Low fan speed operation.
* For the LGH-150RX5 and LGH-200RX5 types, fan speed of the Lossnay will be “Low”.

1 When using PZ-60DR-E or PZ-41SLB-E to connect multiple Lossnay units

- Connect the sensor to the Lossnay set to “Main”.
- It is not necessary to connect to any Lossnay with the “Sub” setting.
- Connect any sensor, etc., with the external change input to the Lossnay unit set to “Main”.
- Any Lossnay with the “Sub” setting will operate at the same High/Low setting as the Lossnay with the “Main” setting when there is sensor signal input.

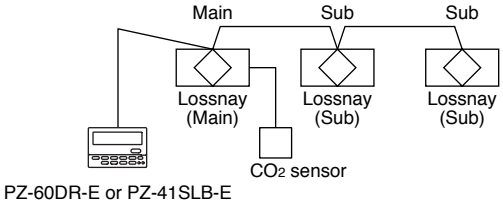

2 When using M-NET for a group of multiple units

- Even if the units are in the same group, you can only change operation to High/Low for Lossnay units connected to the sensor.

CASE 1 : PZ-60DR-E

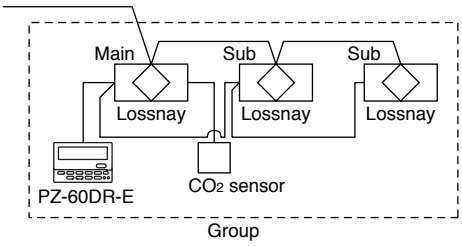

CASE 2 : PZ-52SF-E

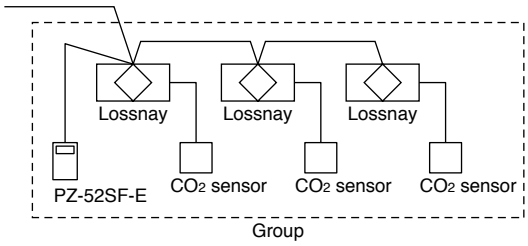

Note:

- When using the M-NET system, the fan speed being input by the sensor signal will not be displayed on the remote controller.

5.10 When switching By-pass externally

Establish the wire connection by inserting the optional remote display adaptor (PAC-SA88HA-E) in the connector CN16 (Ventilation mode selector).

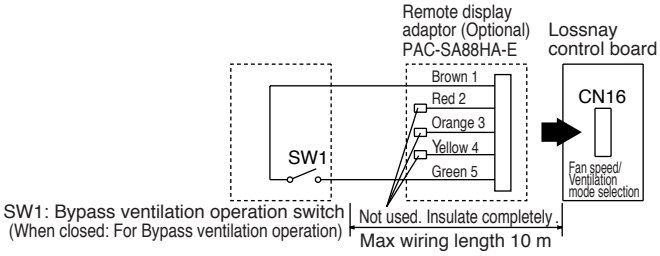

With SW1 is “ON”, the ventilation mode of Lossnay is changed to the By-pass ventilation regardless of the setting on the remote controller.

* When the outdoor air temperature drops lower than 8°C, it changes to the heat exchanger ventilation. (Display of the remote controller does not change.)

5.11 When using the remote/local switching and the ON/OFF input (level signal)

The remoto controller (PZ-41SLB-E) cannot be used.Insert the optional remote ON/OFF adaptor (PAC-SE55RA-E) in CN32 on the Lossnay control PCB.

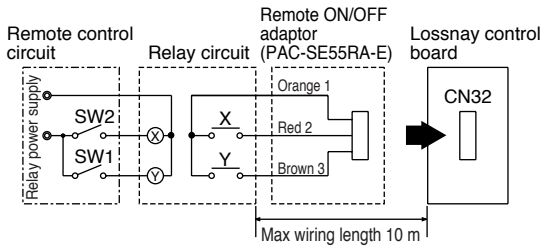

SW1: When this is ON, Lossnay cannot turn ON/OFF by the Remote Controller (PZ-60DR-E, PZ-52SF-E).

SW2: When SW1 is ON, Lossnay can be turned ON by setting SW2 at ON or turned OFF by setting SW2 at OFF.

SW1: Remote/local selector switch
SW2: ON/OFF switch
X, Y : Relay (Contactor rating DC 1 mA)

5.12 When connecting to the City Multi, Lossnay remote controller (PZ-52SF-E) or Mitsubishi Electric Air-Conditioner Network System (MELANS)

If centralized control is performed according the wire connection shown in this section, the remote controller (PZ-41SLB-E) cannot be used.

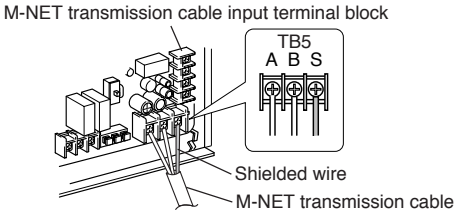

- One shielded wire is connected to TB5 Ⓢ on the PCB on terminal.Address setting is required. (Refer to function setting section.)
  M-NET transmission cable: Connect any of the City Multi indoor unit, or Mitsubishi Electric Air-Conditioner Network System (MELANS) - to the Lossnay.
- Connecting positions are different for the Remote Controller PZ-60DR-E and PZ-52SF-E.
  PZ-60DR-E:
  Connect to TM4 ①, ② on the PCB. (Refer to page C-71 “When connecting with Remote Controller (PZ-60DR-E)”.)
  PZ-52SF-E:
  Connect to TB5 Ⓐ, Ⓑ on the same terminal block as for theM-NET transmission wires.
- Securely connect the M-NET transmission wires to TB5 ⒶⒷ .(No-Polar)
  Type: (Shielded wire, CVVS/CPEVS)
  Wire diameter: 1.25 mm^2 to 2.0 mm^2

When interlocking with Mitsubishi Free Plan air conditioner

- Incase of PZ-60DR-E

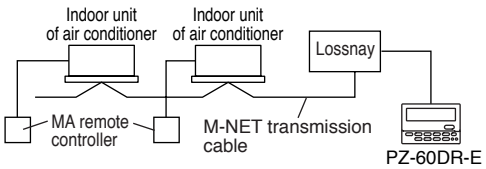

- Incase of PZ-52SF-E

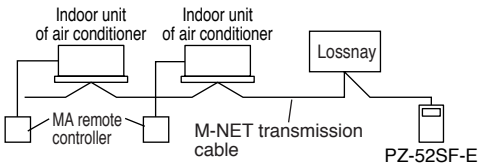

When connecting to PZ-60DR-E and MELANS

- Connect the power feeding unit.

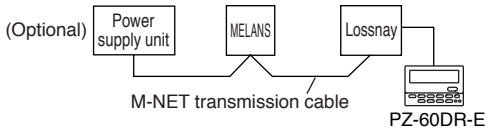

* Limit the total length of transmission wires no longer than 500 m. Limit the wiring length between Lossnay and the power supply unit (Optional) or the outdoor unit no longer than 200 m.

CAUTION:

- Don’t tighten screws on the terminal block with a torque larger than 0.5 Nm. It may damage the PCB.
- Always use shielded wires only for the M-NET transmission wires, and finish the shield properly.

6. Precautions When Designing M-NET Systems

6.1 M-NET Transmission Cable Power Supply

On an M-NET system, the remote controller or central controller operate on power from the transmission cable. Accordingly, there is need to provide power to the transmission cable.
Two systems are available for supplying power: the central system is supplied by a power supply unit; the indoor unit system is supplied by an outdoor unit. The Lossnay unit and the Lossnay remote controller can be connected to either system.

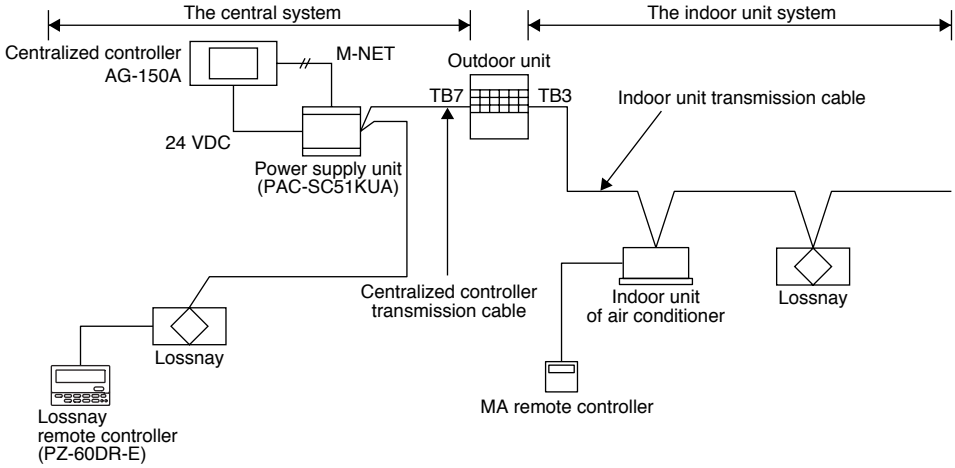

6.2 Restrictions When the Lossnay Units are Connected to the Central Controller M-NET Transmission Cable

The power supply unit has limited capacity; therefore, the number of Lossnay remote controllers is restricted when the Lossnay M-NET remote controllers and Lossnay units are connected to the centralized controller transmission cable. The restriction does not apply to Lossnay and G-50A units that do not receive power from the centralized controller transmission cable.

System controller Model		Non	G-50A One unit	PAC-SF44SRA One unit	PAC-YT40ANRA One unit	AG-150A One unit
Number of Lossnay M-NET remote controllers that can be connected.	Power supply unit PAC-SC50KUA	Max. 24 units	Max. 22 units	Max. 22 units	Max. 20 units	–
	Transmission Booster PAC-SF46EPA	Max. 40 units	Max. 39 units	Max. 39 units	Max. 39 units	–
	Power supply unit PAC-SC51KUA	Max. 20 units	–	Max. 18 units	Max. 16 units	Max. 18 units

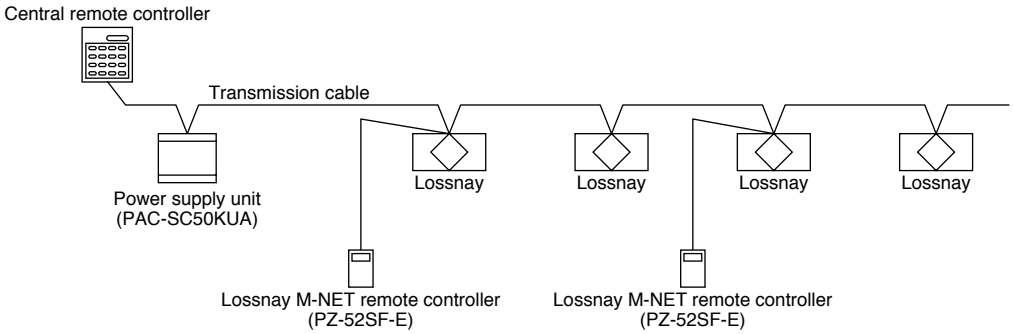

- If a larger number of Lossnay remote controllers than that shown above is connected due to the addition a power supply unit (PAC-SC50KUA, PAC-SC51KUA), a transmission booster (PAC-SF46EPA) is necessary.
- Transmission Booster (PAC-SF46EPA) can be used without a power supply unit (PAC-SC50KUA, PAC-SC51KUA) if TB2 (outdoor unit side) is opened, and the M-NET transmission cable is connected to TB3 (additional indoor unit side).

Power consumption of each central controller

Model		Number of conversion as Lossnay remote controller
Centralized controller	G-50A	Two units
	GB-50A	Twelve units
System remote controller	PAC-SF44SRA	Two units
ON/OFF remote controller	PAC-YT40ANRA	Four units
Schedule timer	PAC-YT34STA	Two units
Centralized controller	AG-150A	Two units

6.3 Wiring Example

Example

<Centralized remote controller and Lossnay units>

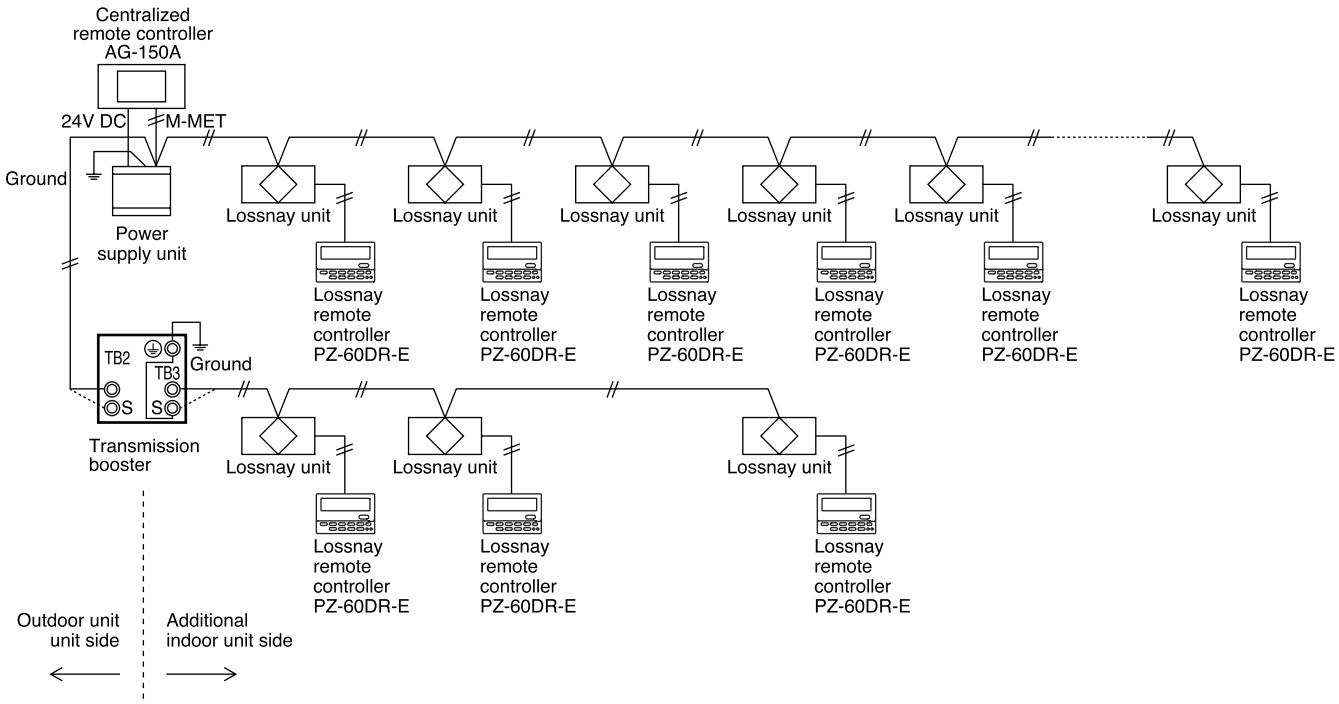

Note:

- Transmission booster cannot be used to extend the transmission cable.
- PZ-52SLB-E can be connected instead of PZ-60DR-E. However, connecting point is different.

6.4 Power Supply to the Indoor Unit Transmission Cable

The number of ME and Lossnay M-NET remote controllers that can be connected to one outdoor unit will depend on the type of outdoor unit. See below for the general guidelines when connecting multiple indoor units of air conditioner and Lossnay units to an outdoor unit.

Indoor units of air conditioner + Remote controllers (Simple remote controllers) + Lossnay M-NET remote controllers ≦ 32*2

*1 MA remote controllers and Lossnay units are not counted.

*2 The number of units varies depending on the functions of the indoor units and outdoor units. For details, refer to the documentation for CityMulti.

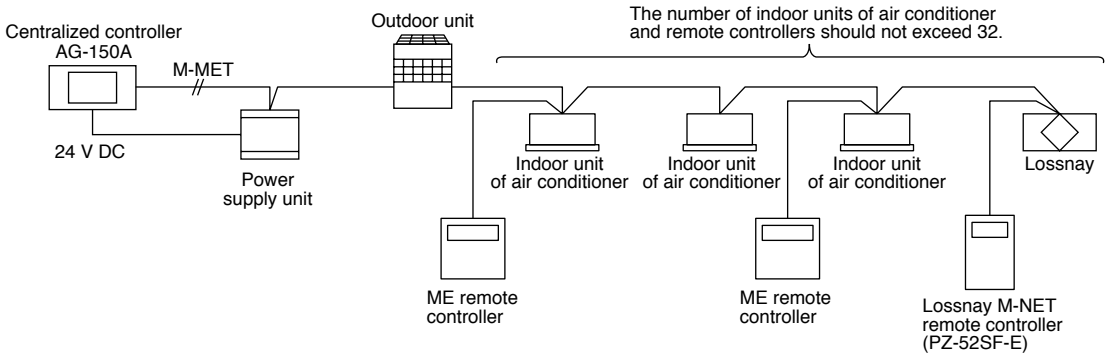

7. M-NET Cable Installation

7.1 Precautions When Installing Wiring

1. When routing the transmission cable outside of all units, position it 5 cm or more away cable for the power supply so that it will not pick up electrical noise. (Never use multi-core cable or place the transmission cable in the same conduit as the power supply cable.)
2. Never connect the power cable to the transmission cable terminal block; it will burn out the circuit board.
3. Always use two-core cable for the transmission cable. Do not route this transmission cable with the transmission cable from another system on the same multi-core cable; it will result in signal error and cause the system not to operate properly.

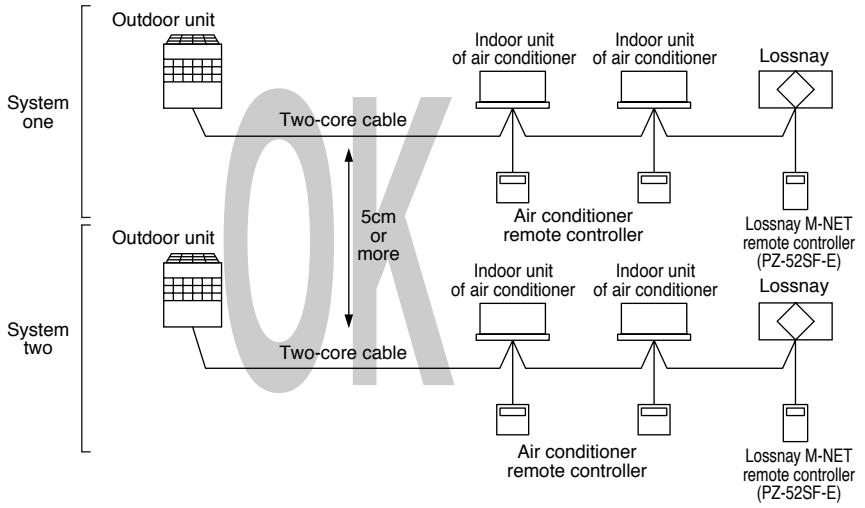

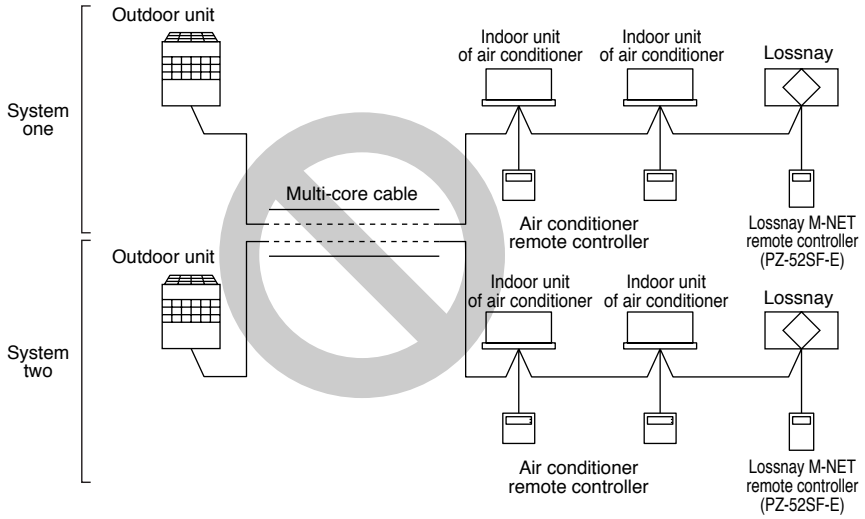

7.2 Electrical Wiring

Types of control cables

1. Wiring the M-NET transmission cables

- Types of transmission cables
  Two-core shielded cable (CVVS, CPEVS).
- Diameter
  1.25 mm^2 to 2.00 mm^2
- Maximum length from an end to the other end
  Less than 200m

2. Remote controller

	ME remote controller	Lossnay remote controller	MA remote controller
Type of cables	Two-core shielded cable (MVVS)	←	←
Diameter	0.5~0.75mm^2	0.75mm^2~1.25mm^2	0.3~1.25mm^2
Note	Use 1.25~2.0mm^2 cables for the portion of exceeding 10m, and apply the rule of “7.3 Length of Control Cable” on the next page.	←	200m Max.

7.3 Control Cable Length

- Maximum power supply cable length (L1 + L2, L1 + L3, L1 + L4 + L5): the longest length of the cable from the power supply unit or the indoor unit of air conditioner to the farthest terminal cannot be more than 200 m.
- Maximum distance between ends (L2 + L3 + L5, L2 + L4, or L3 + L4 + L5): the length of cable from end to end of units cannot be more than 500 m.
- Remote controller cable length (ℓ): The distance between the remote controller and the terminal connected to it cannot be more than 10 m.

System Example

When using Lossnay remote controller or ME remote controller.

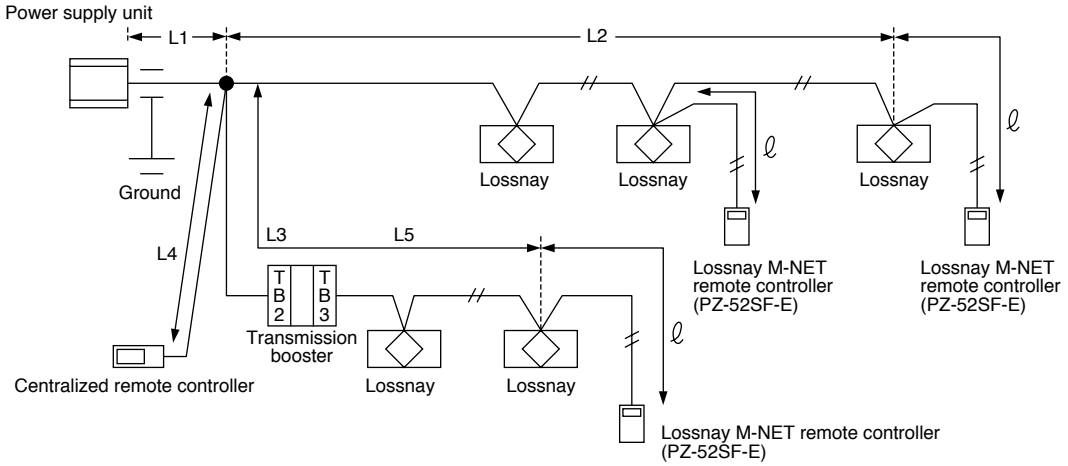

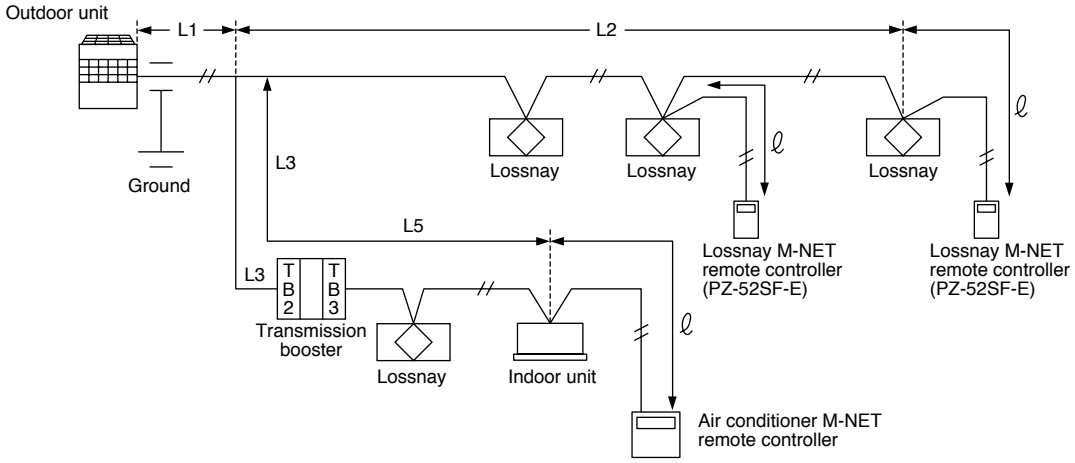

Notes:

- Always install the ground cable for the transmission cables by routing the central control system through the power supply unit, then routing the indoor unit system through the ground terminal on the outdoor unit.
- If the cable length (ℓ) for the remote controller exceeds 10 m, use a cable with a 0.75 mm^2 diameter, but change the section exceeding 10 m to a cable with a diameter of 1.25 mm^2 to 2.0 mm^2. Cable length (ℓ) exceeding 10m should be included in the “maximum power supply cable length” restriction of 200 m and the “maximum distance from ends to ends of units” restriction of 500 m.
- If the cable exceeds the maximum cable length and overall extended length, voltage will drop and cause the system to malfunction.

8. M-NET System Designs

8.1 Address Definitions

An address is a unique number used to identify each indoor unit of air conditioner and controller.

Unit		Address setting	Example	Note
Indoor unit of air conditioner Lossnay unit		01 to 50	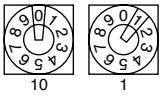	Use the smallest address within the same group of indoor units. Make the address of the indoor units connected to the sub BC controller larger than the address of indoor units connected to the main BC controller.
Outdoor unit		51 to 99, 100	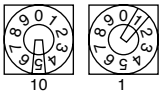	The smallest address of indoor unit in same refrigerant system +50. *The address automatically becomes “100” if it is set as “01 to 50”.
BC controller (Main)		52 to 99, 100	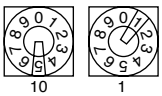	The address of outdoor unit +1. *Choose another address between 01 and 50 if two address overlap. *The address automatically becomes “100” if it is set as “01 to 50”.
BC controller (Sub)		53 to 99, 100	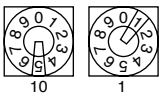	Smallest address within the indoor units connected to the BC controller (Sub) plus 50.
Local remote controller	PZ-52SF-E M-NET, LOSSNAY Remote controller (Main)	101 to 150	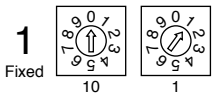	The smallest address of indoor unit in the group + 100. *The place of “100” is fixed to “1”.
Local remote controller	PZ-52SF-E M-NET, LOSSNAY Remote controller (Sub)	151 to 199, 200	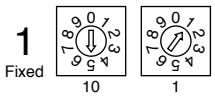	The address of main remote controller +50. *The address automatically becomes “200” if it is set as “00”.
System controller	Group remote controller	201 to 250	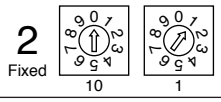	The smallest group No. to be managed +200.
System controller	System remote controller ON/OFF remote controller	000, 201 to 250	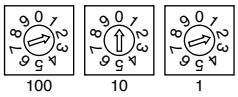	
System controller	Schedule timer	202 to 250	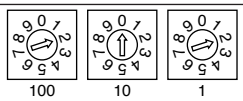	
System controller	AG-150A, G50-A	000, 201 to 250	Set up on display	
System controller	LMAP02-E	201 to 250	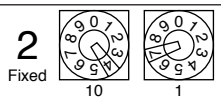	

Note:

- There is no need to set the address unless the Lossnay is connected to the M-NET transmission cable.

System configuration example

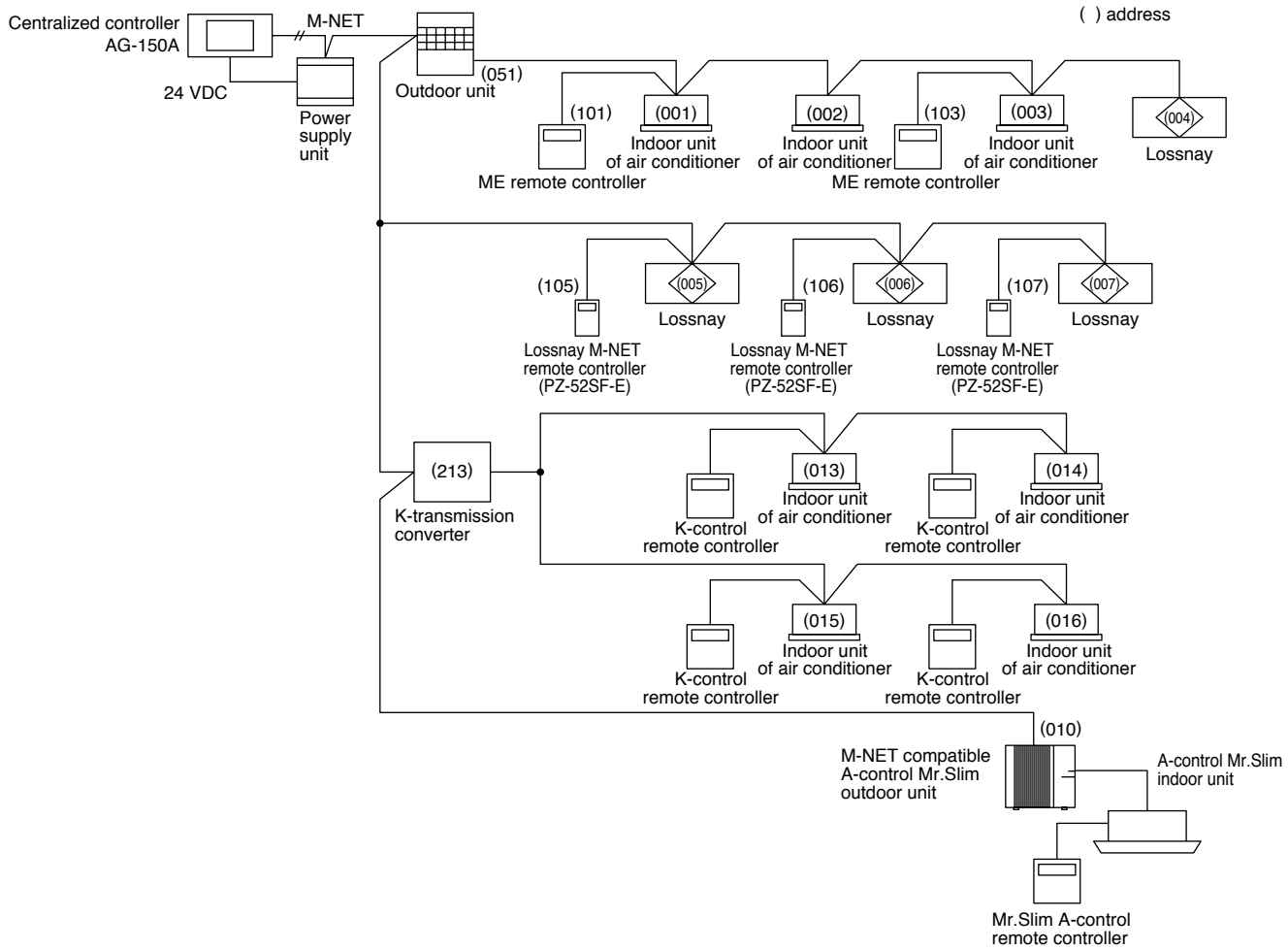

Note:

- PZ-60DR-E can be connected instead of PZ-52SF-E. However connecting point is different. Address setting is not required for PZ-60DR-E.

8.2 Precautions When Setting the Groups (when not interlocked with City Multi indoor units)

Precautions	
1	The maximum number of Lossnay units in one group is 16. (Refer to page C-16.)
2	When two remote controllers are used within the same group, set one remote controller as the main (address 101 to 150) and the other as the sub (address 151 to 200). (Refer to page C-15.)
3	Group settings: ① Set the groups at the System Controller. If two or more System Controllers are used in combinations, perform them at the main one. (Refer to page C-93.) ② If a System Controller is not being used, use the Lossnay remote controller to set the groups. (Refer to page C-92.)
4	Do not set the indoor units of air conditioner and Lossnay units in the same group. If these units are set to the same group, neither the indoor unit nor Lossnay will operate.
5	Turn on the power source for the Lossnay when setting the groups.
6	If MELANS is being used to set the groups, be sure to also set the address for the Lossnay remote controllers to the group setting. If the remote controller address is not registered, “H0” is displayed and the system does not start up.
7	No more than three Lossnay remote controllers can be set to the same group in a system using a System Controller.

8.3 Precautions When Performing Interlock Settings (when interlocked with City Multi indoor units)

Precautions	
1	The maximum number of indoor units of air conditioner that can be interlocked is 16. (Refer to page C-18.)
2	One Lossnay can be interlocked with an indoor unit of air conditioner. (Refer to page C-18.)
3	Interlock settings: ① Perform interlock settings at the System Controller. If two or more System Controllers are used in combinations, perform them at the main one. (Refer to page C-93.) ② When MA or ME remote controllers are being used except above ①, use the MA or ME remote controller for the interlock settings. (If ① or ② does not apply, interlock settings cannot be made.)
4	Do not register the Lossnay units to the other Lossnay group. In this case, the Lossnay units aren’t interlocked to the other Lossnay group.
5	When performing the settings using a MA or ME remote controller, always set for interlocked operation to the smallest address indoor unit in a group. If the setting is not made in this manner, the message “This function is not available” will appear when operating the ventilation button and interlocking with the Lossnay unit will not be possible.
6	Turn on the power source for the Lossnay when performing interlock settings.

9. Automatic Ventilation Switching

9.1 Effect of Automatic Ventilation Mode

The automatic damper mode provides the correct ventilation for the room conditions. It eliminates the need for troublesome switch operations when setting the Lossnay ventilator to “By-pass” ventilation. The following shows the effect “By-pass” ventilation will have under various conditions.

1. Reduces cooling load

If the air outside is cooler than the air inside the building during the cooling season (such as early morning or at night), “By-pass” ventilation will draw in the cooler outside air and reduce the cooling load on the system.

2. Cooling using outdoor air

During cooler seasons (such as between spring and summer or between summer and fall), if the people in a room cause the temperature of the room to rise, “By-pass” ventilation draw in the cool outside air and use it as is to cool the room.

3. Night purge

“By-pass” ventilation can be used to release any accumulated hot air from inside the building during the hot summer season.

4. Office equipment room cooling

During cold season, outdoor air can be drawn in and used as is to cool rooms where the temperature has risen due to office equipment use.
(Only when interlocked with City Multi and Mr. Slim indoor unit)

9.2 Ventilation mode control

Lossnay (heat exchange) ventilation or bypass (normal) ventilation is achieved by switching the air duct inside the Lossnay unit with a damper.

① Ventilation mode
There are 3 control modes.

- Lossnay ventilation (heat exchange ventilation) mode: Heat exchange ventilation is performed regularly via the Lossnay core.
- Bypass ventilation (normal ventilation) mode : Ventilation is performed regularly without going through the Lossnay core.
- Automatic ventilation mode : A temperature sensor built into the unit provides automatic ventilation to a suitable ventilation mode. In addition, energy saving ventilation is provided by interlocking with a Mr. Slim or City Multi indoor unit.

② Damper control for each system
The control indicated below can be performed according to the system that is paired

Caution	●Up to two of the Lossnay remote controllers PZ-60DR-E, PZ-41SLB-E, and PZ-52SF-E can be used in the same group, but they cannot be used together with a different remote controller. When using two remote controllers, be sure to use the same model of remote controller. ●PZ-41SLB-E cannot be used in M-NET control. When controlling Lossnay in M-NET control, use PZ-60DR-E or PZ-52SF-E.

System		Remote controllers System controllers	Ventilation mode
Basic System	Stand-alone/multiple Lossnay and Lossnay remote controller: PZ-60DR-E	Lossnay remote controller PZ-60DR-E	The “Function selector” button of the remote controller permits ventilation mode switching for automatic, Lossnay, and bypass ventilation. Bypass ventilation is set at the time of night purge operation, and ventilation mode switching is not possible.
Basic System	Stand-alone/multiple Lossnay and Lossnay remote controller: PZ-41SLB-E	Lossnay remote controller PZ-41SLB-E	The “Function selector” button of the remote controller permits ventilation mode switching for automatic, Lossnay, and bypass ventilation.
Basic System	System interlocked with Mr. Slim	A-control remote controller K-control remote controller (Remote controller connection prohibited with Lossnay)	Fixed to automatic ventilation.
Basic System	Level signal/pulse signal output device and external device only	None	Fixed to automatic ventilation.
M- NET Control	Stand-alone/multiple Lossnay and Lossnay remote controller: PZ-60DR-E	Lossnay remote controller PZ-60DR-E	The “Function selector” button of the remote controller permits ventilation mode switching for automatic , Lossnay, and bypass ventilation. Bypass ventilation is set at the time of night purge operation, and ventilation mode switching is not possible.
M- NET Control	Stand-alone/multiple Lossnay and Lossnay remote controller: PZ-52SF-E	Lossnay remote controller PZ-52SF-E	The “Function selector” button of the remote controller permits ventilation mode switching for automatic , Lossnay, and bypass ventilation.
M- NET Control	M-NET Lossnay central control system	M-NET controller	The “Operation mode” button of the system remote controller and the centralized controller permits ventilation mode switching for automatic , Lossnay, and bypass ventilation. (The schedule timer, ON/OFF remote controller, and the group remote controller do not permit ventilation mode selection.)
M- NET Control	M-NET System interlocked with City Multi indoor units	ME remote controller PAR-F27MEA, MA remote controller PAR-20/21MAA	Fixed to automatic ventilation.

③ Bypass ventilation prohibited

When the conditions described below are applicable, the ventilation mode will be fixed at Lossnay ventilation. When bypass ventilation has been set from the remote controller or the system controller, damper operation will be set to Lossnay ventilation, even though bypass ventilation is displayed on the ventilation mode display.

- When the outdoor temperature is 8ºC or lower. (Product condensation prevention)
  When bypass ventilation prohibition has been set under this condition, the prohibition will be cancelled when the outdoor temperature goes from a temperature of less than 10 ºC to one higher than 10ºC.
- When there is an outdoor temperature (Outdoor Air) thermistor fault.
- When, in the automatic ventilation mode, there is an outdoor temperature (Outdoor Air) or indoor temperature (Return Air) thermistor fault.
- When Lossnay is set to the automatic ventilation mode and interlocked with Mr.Slim or City Multi indoor units set to the fan operation mode.

④ Damper operation

The damper provides control with a 30 second period. Accordingly, a delay of 30 seconds maximum may be generated from ventilation mode switching to damper operation.

⑤ Automatic ventilation algorithm temperature map

Ventilation mode switching of Lossnay ventilation/Bypass ventilation in the automatic ventilation mode is in accordance with the following map.

a. Systems interlocked with Mr. Slim and City Multi indoor units

The map will differ depending on the operation mode that has been set with the A-control remote controller or the K-control remote controller for Mr. Slim, or the MA remote controller or the ME remote controller for City Multi indoor units. There will be switching to the ventilation mode in conjunction with the set temperature of the air conditioner remote controller. Note that the “b” map will be followed while Mr. Slim and City Multi indoor units are stopped.

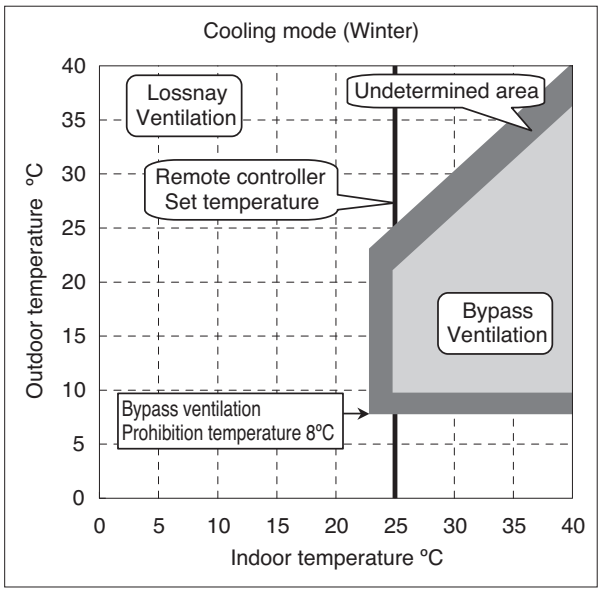

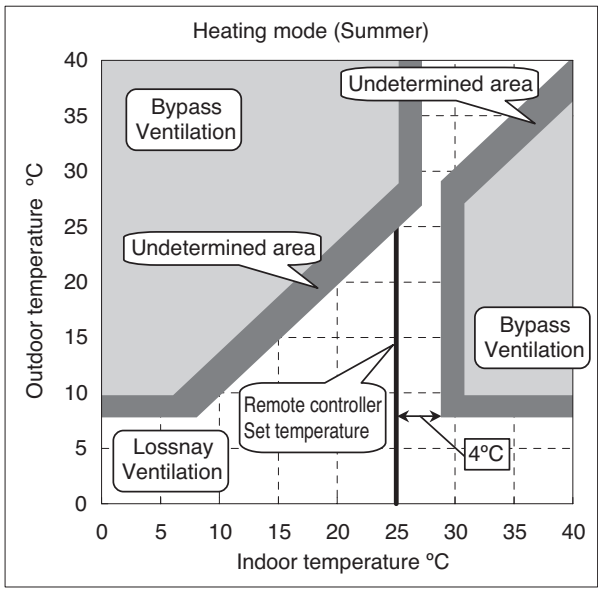

Lossnay ventilation area

Bypass ventilation area

Undetermined area
When operation starts under this condition, Lossnay ventilation will be activated.
When this condition is reached after operation starts, the current ventilation mode is maintained.

b. When there is no interlocking with Mr. Slim and City Multi indoor units

Pattern 1. Normal ventilation mode

When PZ-60DR-E is used, operation will be at the setting of automatic ventilation adjustment pattern “1” of the remote controller function selection. When PZ-60DR-E is not used, operation will be at the OFF setting of function selection switch (SW2-7) on the Lossnay circuit board.

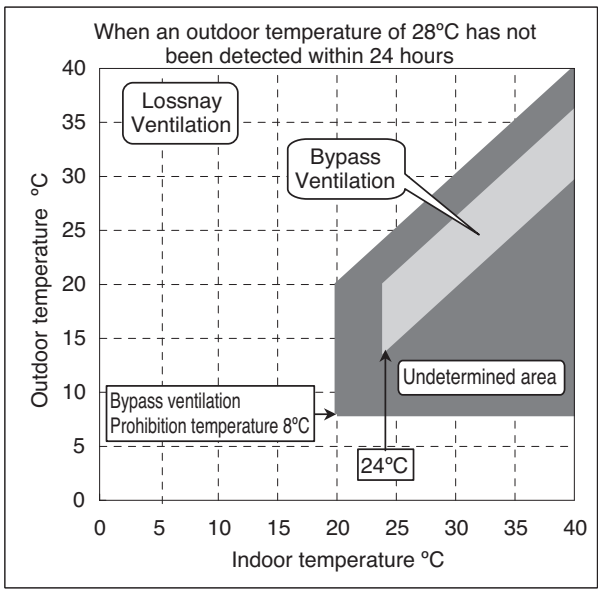

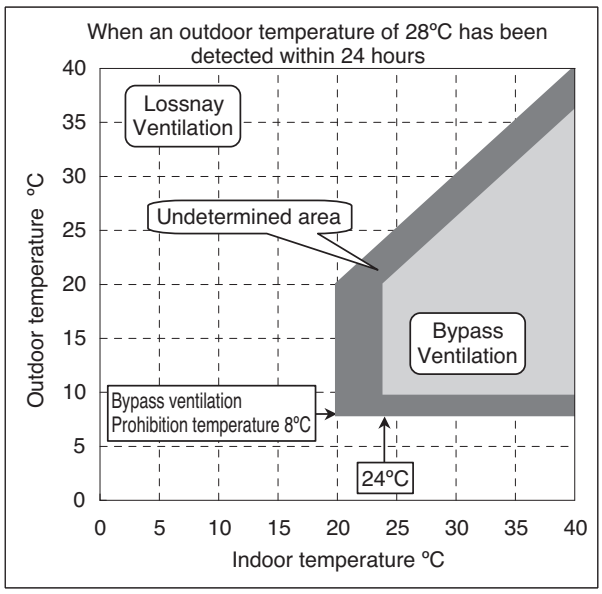

Lossnay ventilation area

Bypass ventilation area

Undetermined area
When operation starts under this condition, Lossnay ventilation will be activated.
When this condition is reached after operation starts, the current ventilation mode is maintained.

Pattern 2. Outdoor cooling priority mode

When the outdoor temperature is lower than the indoor temperature, this mode actively takes in the outdoor air for cooling. When PZ-60DR-E is used, operation will be at the setting of automatic ventilation adjustment pattern “2” of the remote controller function selection. When PZ-60DR-E is not used, operation will be at the ON setting of function selection switch (SW2-7) on the Lossnay circuit board.

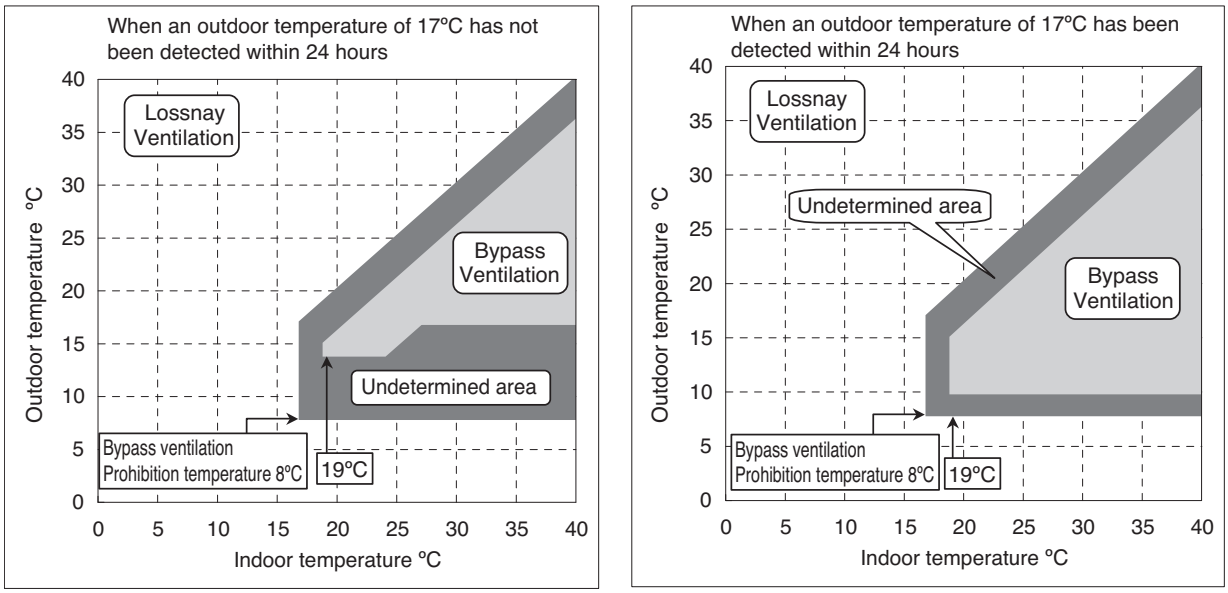

Lossnay ventilation area

Bypass ventilation area

Undetermined area
When operation starts under this condition, Lossnay ventilation will be activated.
When this condition is reached after operation starts, the current ventilation mode is maintained.

⑥ Ventilation mode change recommendation (RECOMMENDED, VENTILATION MODE) display

When using PZ-60DR-E and the ventilation mode is set to Lossnay ventilation or bypass ventilation, “RECOMMENDED” and “VENTILATION MODE” may be displayed alternately (for 10 minutes maximum). This function informs the user of the suitable ventilation mode according to the automatic ventilation algorithm. When a ventilation mode change recommendation has been displayed, more comfortable ventilation can be provided by pressing the “Function selector” button of the remote controller and switching to another ventilation mode.
(We recommend that “AUTO” be selected for the ventilation mode; however, there is no problem in leaving the ventilation mode unchanged with “RECOMMENDED” “VENTILATION MODE” displayed.)

10. Troubleshooting

■ Work precautions

- When removing or touching a transformer, printed circuit board or other parts, make sure to turn off the power supply isolator.
- When removing the circuit board, always hold it at both ends and remove carefully so as not to apply force to the surface mounted parts.
- When removing the circuit board, be careful of the metal edges on the board.
- When removing or inserting the connectors for the circuit board, hold the entire housing section. Never pull on the lead wires.
- When servicing, be sure to recreate the malfunction two to three times before starting repairs.
- If it is thought that there is a printed circuit board malfunction, check for disconnected wires in the print pattern, burnt parts or discoloration.
- If the printed circuit board is replaced, make sure that the switch settings on the new board are the same as the old board.

* Part names used in the following text correspond to those listed in the parts catalog.

10.1 Service Flow

Confirmation items

① Condition of trouble – remote controller display, etc.
② Frequency of trouble – date of start of operation and occurrence
③ Occurrence timing
④ Existence of drawings, equipment (including controllers), cables, wiring, and settings.

Applicable models
Lossnay
LGH-15 to 200RX5-E

Remote controller
PZ-60DR-E
PZ-41SLB-E
PZ-52SF-E

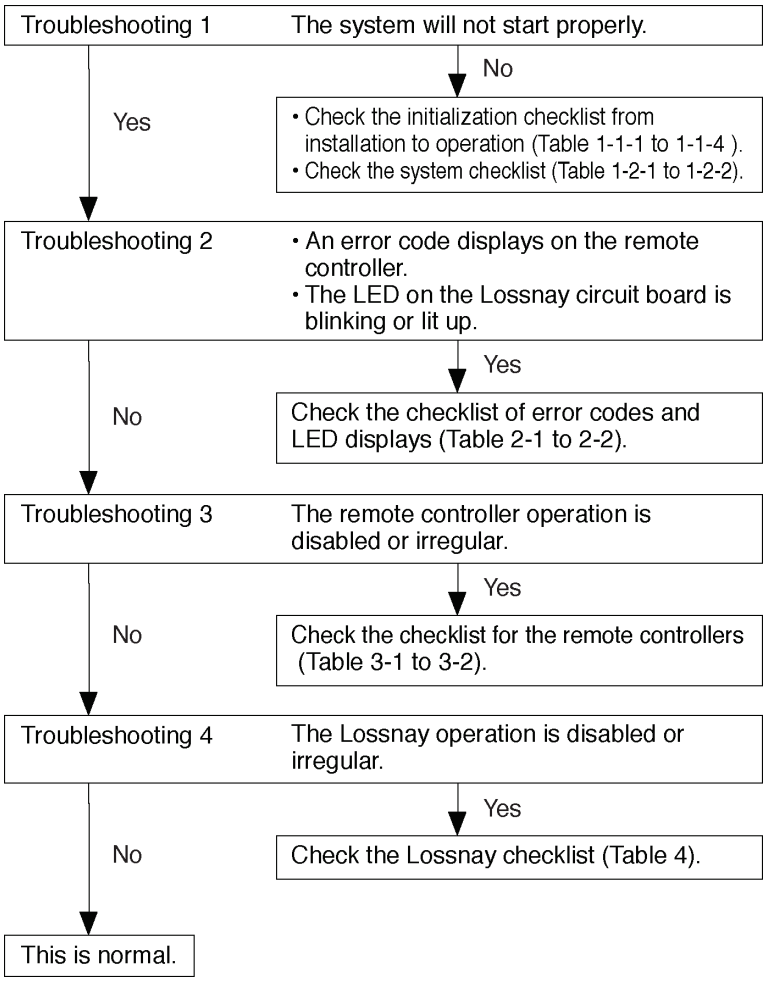

10.2 Checklist

10.2.1 Troubleshooting 1 : The system will not start properly

Initialization checklist from installation to operation (Table 1-1)
After checking the system, verify the checkpoints listed below.

Power supply (Table 1-1-1)

No.	Checkpoint	Action
1	Is the main power supply on?	Turn on the main power supply.
2	Do the main power supply switching capacity and wiring diameter meet specification?	Use specified items.
3	Is the specified power supply of 220 to 240 V AC connected to the power supply terminal (TM1)?	Connect the specified power supply.
4	Has the fuse (FUSE 1) on the circuit board blown?	Replace the circuit board.
5	Are connector CN1 of the transformer primary and connector CN2 of the transformer secondary on the circuit board securely connected?	Connect them securely.
6	Is the power supply wiring incorrectly wired, or is there a faulty connection?	Make secure connections.
7	Is power display LED4 (red) on the circuit board unlit?	Check the above checkpoints.

Transmission cables (Table 1-1-2)
Check the following checkpoints when connecting with the remote controller, M-NET controller, or City Multi indoor units.

No.	Checkpoint	Action
1	Do the transmission cables meet regulations? (Type, diameter)	Use specified cables.
2	Is the transmission cable wired at least 5 cm away from the power supply cable?	Wire the transmission cable at least 5 cm away from the power supply cable.
3	Are multiple transmission or signal cables wired to the same power cable duct?	Wire the transmission cables away from the signal cables.
4	Are multiple transmission cables wired with multi core cables?	Using suitable cables, wire the transmission cables so that they are separated from one another.
5	Are the transmission cables securely connected to the terminals?	Connect them securely.
6	Are the transmission cables connected to the specified terminal blocks? Basic system (PZ-60DR-E, PZ-41SLB-E): TM4 ①, ② M-NET control: TAB5 Ⓐ, Ⓑ	Connect them to the specified terminal blocks.
7	Is the wiring length of the transmission cable within the regulations? Basic system (PZ-60DR-E, PZ-41SLB-E): Total extension within 500 m M-NET control: Maximum extension within 200 m, total extension within 500 m	Wire within the regulations. (Refer to page C-36)
8	Is the Main/Sub selection switch (SW1) on the Lossnay circuit board set correctly? When using one Lossnay unit: Set the unit to “Main”. When using multiple Lossnay units: Set the first unit to “Main” and the second and following units to “Sub”.	Set the switches correctly.
9	When using M-NET Is the address setting on the Lossnay circuit board (SA1, SA2) set to the correct number?	Make the setting so that the address does not duplicate that of other devices within M-NET control.
10	When PZ-60DR-E is not used, are the function selection switches (SW2, SW5) on the Lossnay circuit board set correctly?	Set the switches correctly to correspond with the application. (Refer to page C-72)
11	When PZ-60DR-E is used, is the function selection set correctly?	Set it correctly to correspond with the application. (Refer to page C-78 to C-90)

Signal cables from external devices (Table 1-1-3)

Check the following checkpoints when connecting with level signal/pulse signal output devices, and Mr. Slim units.

No.	Checkpoint	Action
1	Do the transmission cables meet regulations? (Type, diameter)	Use specified cables.
2	Is the signal cable wired at least 5 cm away from the power supply cable?	Wire the signal cable at least 5 cm away from the power supply cable.
3	Are multiple transmission or signal cables wired to the same power cable duct?	Wire the transmission cables away from the signal cables.
4	Are multiple signal cables wired with multi core cables?	Using suitable cables, wire the signal cables so that they are separated from one another.
5	Are the signal cables securely connected to the terminals?	Connect them securely.
6	Are the signal cables connected to the specified terminal blocks? Mr. Slim control signal : TM2 ①, ② Charged signal : TM2 ①, ② Uncharged a-contact signal: TM2 ①, ③	Connect them to the specified terminal blocks.
7	Is the wiring length of the signal cable within the regulations? Mr. Slim control signal : Total extension within 500 m Charged signal : Within limitation of the external device Uncharged a-contact signal: Total extension within 500 m	Wire within the regulations.
8	Do the external signals meet specifications? Level signal: Charged 12 V DC/ 24 V DC, uncharged a-contact Pulse signal: Charged 12 V DC/ 24 V DC, uncharged a-contact (A pulse width of 200 ms or greater is required)	Input a signal that suits the specifications.
9	Are the type of input signal and the setting of the pulse input matched? Pulse signal : ON setting Other than pulse signal: OFF setting	<When using PZ-60DR-E> Check the pulse input setting from the function selection. (Refer to page C-63) <When not using PZ-60DR-E> Check the setting of the pulse input switch (SW2-2) on the Lossnay circuit board. (Refer to page C-63)
10	In a system with multiple Lossnay units, are the signal cables connected to the specified Lossnay unit? Basic system (PZ-60DR-E, PZ-41SLB-E): Lossnay unit for which the Main/Sub selection switch (SW1) is set to “Main” M-Net control: Lossnay unit that is set to the address with the smallest number within the group	Connect the signal cables to the specified Lossnay unit.
11	When PZ-60DR-E is not used, are the function selection switches (SW2, SW5) on the Lossnay circuit board set correctly?	Set the switches correctly to correspond with the application. (Refer to page C-72)
12	When PZ-60DR-E is used, is the function selection set correctly?	Set it correctly to correspond with the application. (Refer to page C-78 to C-90)

Signal cables to external devices (Table 1-1-4)

Check the following checkpoints when outputting the operation monitor, air supply fan operation monitor, malfunction monitor, bypass operation monitor, and operation monitor with delay function.

<table>
<tr><th>No.</th><th>Checkpoint</th><th>Action</th></tr>
<tr><td>1</td><td>Do the signal cables meet regulations? (Type, diameter)</td><td>Use specified cables.</td></tr>
<tr><td>2</td><td>Is the signal cable wired at least 5 cm away from the power supply cable?</td><td>Wire the signal cable at least 5 cm away from the power supply cable.</td></tr>
<tr><td>3</td><td>Are multiple transmission or signal cables wired to the same power cable duct?</td><td>Wire the transmission cables away from the signal cables.</td></tr>
<tr><td>4</td><td>Are multiple signal cables wired with multi core cables?</td><td>Using suitable cables, wire the signal cables so that they are separated from one another.</td></tr>
<tr><td>5</td><td>Are the signal cables securely connected to the terminals?</td><td>Connect them securely.</td></tr>
<tr><td>6</td><td>Are the signal cables connected to the specified terminal blocks?
Operation monitor, operation monitor with delay function 1 : TM4 ⑨, ⑩
Malfunction monitor : TM3 ⑦, ⑧
Bypass operation monitor, operation monitor with delay function 2 : TM3 ⑥, ⑦</td><td>Connect them to the specified terminal blocks.</td></tr>
<tr><td>7</td><td>Are the output capacities of the operation monitor, malfunction monitor, and bypass operation monitor within the ratings?
<table>
<tr><th>Output</th><th>Maximum rating</th><th>Minimum rating</th></tr>
<tr><td>Operation monitor
Operation monitor with delay function 1</td><td>240 V AC 2 A
24 V DC 2 A</td><td>220 V AC 100 mA
5 V DC 100 mA</td></tr>
<tr><td>Malfunction monitor</td><td>240 V AC 1 A
24 V DC 1 A</td><td>220 V AC 100 mA
5 V DC 100 mA</td></tr>
<tr><td>Bypass operation monitor
Operation monitor with delay function 2</td><td>240 V AC 1 A
24 V DC 1 A</td><td>220 V AC 100 mA
5 V DC 100 mA</td></tr>
</table></td><td>Use within the ratings.</td></tr>
<tr><td>8</td><td>When using the operation monitor, is the setting of the output signal correct?</td><td><When using PZ-60DR-E>
Check the operation monitor setting from the function selection.
(Refer to page C-70)
<When not using PZ-60DR-E>
Check the setting of the operation monitor (SW5-2) on the Lossnay circuit board. (Refer to page C-74)</td></tr>
<tr><td>9</td><td>When using the operation monitor with delay function, is the setting of the output signal correct?</td><td>Check the settings of the TM4 ⑨, ⑩ output setting (SW2-8), and the TM3 ⑥, ⑦ output setting (SW5-6) on the Lossnay circuit board.
(Refer to page C-74 and C-75)</td></tr>
<tr><td>10</td><td>When PZ-60DR-E is not used, are the function selection switches (SW2, SW5) on the Lossnay circuit board set correctly?</td><td>Set the switches correctly to correspond with the application.
(Refer to page C-72)</td></tr>
<tr><td>11</td><td>When PZ-60DR-E is used, is the function selection set correctly?</td><td>Set it correctly to correspond with the application.
(Refer to page C-78 to C-90)</td></tr>
</table>

System checklist (Table 1-2)

When using PZ-60DR-E, PZ-41SLB-E, or interlocking with external devices (Table 1-2-1)

No.	Error	Cause	Action
1	• Remote controller display does not appear. • The power display "◉" does not appear on the remote controller. • The remote controller continues to display "H0".	◯ Power is not supplied to the Lossnay, or power that does not follow specifications is used. ◯ When using only one Lossnay, the Main/Sub switch (SW1) on the Lossnay circuit board is set to "Sub". ◯ The overall wiring length of the transmission cable is longer than specified (longer than 500 m). ◯ Is there a connection of 3 or more remote controllers, or 16 or more Lossnay units? ◯ The remote controller is connected to TB5 (terminal block for M-NET transmission cable). ◯ PZ-52SF-E (Lossnay remote controller for M-NET) is connected to the Lossnay remote controller.	◯ Check the power supply to the Lossnay. (Refer to Table 1-1-1) ◯ Set the Main/Sub (SW1) switch to "Main". ◯ Check the length of the transmission cable wiring. ◯ Check the number of units connected. ◯ Connect the transmission cable to TM4 ①, ②. ◯ Change to the PZ-60DR-E or PZ-41SLB-E remote controller.
2	Remote controller does not operate. (Communication error display)	◯ When using multiple Lossnay units, the Main/Sub switch (SW1) on the Lossnay circuit board of the second or following unit is set to "Main." ◯ The overall wiring length of the transmission cable is longer than specified (longer than 500 m). ◯ Multiple transmission cables are wired with multi core cables. ◯ When two remote controllers are used, are PZ-60DR-E and PZ-41SLB-E being used together?	◯ Set the Main/Sub switch (SW1) of the second and following Lossnay units to "Sub". ◯ Check the length of the transmission cable wiring. ◯ Using suitable cables, wire the transmission cables so that they are separated from one another. ◯ Use the same type of remote controller.
3	Interlock operation with external device does not occur.	◯ Is the specified power being supplied to the Lossnay unit? ◯ Are the signal cables from the external devices wired according to regulations? ◯ The type of external signal does not match the connected terminal unit (charged, uncharged, serial signal). ◯ The type of external signal does not match the pulse input setting (level signal, pulse signal). ◯ The external device signal is not being input. ◯ The external device and signal cable wiring is longer than specified. (12 V DC, 24 V DC: Longer than limitations of external device Uncharged a-contact: Longer than 500 m Mr. Slim signal: Longer than 500 m) ◯ "DELAY OPERATION 'ON'" (PZ-60DR-E) or "Delay time" (PZ-41SLB-E) is set. (When using PZ-60DR-E, during the delay operation, LED1 (green) on the Lossnay circuit board will be lit.)	◯ Refer to Table 1-1-1. ◯ Refer to Table 1-1-3. ◯ Check the type of external signal and the connections between the external signal and external control input terminal (TM2). ◯ <When using PZ-60DR-E> Check the type of external signal and verify the pulse input setting from the function selection. (Refer to page C-66) <When not using PZ-60DR-E> Check the type of external signal and the setting of the pulse input switch (SW2-2) on the Lossnay circuit board. (Refer to page C-73). ◯ Check the external device. ◯ Check the length of the signal cable wiring. ◯ Check the Delay operation setting with the remote controller (PZ-60DR-E or PZ-41SLB-E).

No.	Error	Cause	Action
3	Interlock operation with external device does not occur.	◯ The interlock mode is set to “ON Interlocked” or “OFF Interlocked” with the remote controller (PZ-60DR-E). ◯ The interlock mode is set to “2” (ON Interlocked) or “3” (OFF Interlocked) with PZ-41SLB-E. ◯ When not using PZ-60DR-E and PZ-41SLB-E, the delay setting switch (SW5-1) on the Lossnay circuit board is set to ON. (During the delay operation, LED1 (green) on the Lossnay circuit board will be lit.) ◯ When not using PZ-60DR-E and PZ-41SLB-E, the interlock mode setting switches (SW5-7, SW5-8) on the Lossnay circuit board are set to “ON Interlocked” or “OFF Interlocked”. ◯ When using multiple Lossnay units, the external control input signal is connected to a unit set to “Sub”. ◯ Remote/local switching (CN32) is used.	◯ Check the Interlock mode setting with the remote controller (PZ-60DR-E). (Refer to page C-78) ◯ Check the Interlock mode setting with the remote controller (PZ-41SLB-E). (Refer to page C-91) ◯ Check the setting of the delay setting switch (SW5-1) on the Lossnay circuit board. (Refer to page C-74) ◯ Check the setting of the interlock mode setting switch (SW5-7, SW5-8) on the Lossnay circuit board. (Refer to page C-76) ◯ Connect the external control input signal to the Lossnay unit set to “Main.” ◯ When interlocked with external devices, remote/local switching (CN32) cannot be used.

Note: When two remote controllers are used, the combination of the PZ-60DR-E and PZ-41SLB-E cannot be used.

System checklist when using the M-NET (Table 1-2-2)

No.	Error	Cause	Action
1	Lossnay does not interlock with City Multi indoor unit. (Lossnay cannot be operated by the ventilation button on the ME remote controller, MA remote controller or MELANS.)	◯ Lossnay is not set for interlock operation, or is set for interlock operation at the wrong address. ◯ The length of the M-NET transmission cable wiring from the outdoor unit or the system’s overall wiring length is longer than specified. (Longer than 200 m from the outdoor unit, longer than 500 m between ends.) ◯ PZ-41LSB-E is connected to Lossnay.	◯ Check the Lossnay address, and set for an address corresponding to interlock operation. ◯ Check the length of the transmission cable wiring. (Refer to page C-36.) ◯ Change to the PZ-60DR-E or PZ-52SF-E remote controller. (PZ-41SLB-E cannot be used with the M-NET.)
2	Cannot operate using MELANS or the Lossnay remote controller.	◯ The address that has been set for the group in MELANS and the address for the Lossnay are different. ◯ The length of the M-NET transmission cable wiring from the power supply unit or the system’s overall wiring length is longer than specified. (Longer than 200 m from the power supply unit, longer than 500 m between ends.) ◯ PZ-41LSB-E is connected to Lossnay.	◯ Check the registered address in MELANS. ◯ Check the length of the transmission cable wiring. (Refer to page C-36.) ◯ Change to the PZ-60DR-E or PZ-52SF-E remote controller. (PZ-41SLB-E cannot be used with the M-NET.)
3	A Lossnay unit should operate independently by MELANS or the Lossnay remote controller, but it interlocks with different City Multi units.	◯ It has been set for interlock operation with the City Multi units.	◯ Cancel the interlock operation setting.

No.	Error	Cause	Action
4	Cannot perform group settings for the Lossnay using MELANS, ME remote controller, or MA remote controller. (The remote controller displays “88” at the time of registration.)	◯ Power is not supplied to Lossnay, or power that does not follow specifications is used. ◯ The M-NET transmission cable is connected to TM4 ①, ②. ◯ The transmission cable is not properly connected to MELANS or City Multi. ◯ The length of the transmission cable wiring is longer than specified (longer than maximum 200 m from the power supply unit, longer than 500 m between ends). ◯ Lossnay address setting (SA1, SA2) is wrong.	◯ Check the power supply to Lossnay and perform the registration again. ◯ Connect the transmission cable to TB5 Ⓐ, Ⓑ. ◯ Check the transmission cable connection. ◯ Check the length of the transmission cable wiring. (Refer to page C-36.) ◯ Check the setting of the address setting switches (SA1, SA2) on the Lossnay circuit board.
5	When power is supplied to the system, the Lossnay remote controller PZ-52SF-E continues to display “HO” and does not start. (Group registration information is erased.)	◯ In a system connected to MELANS, the group setting was performed from the Lossnay remote controller PZ-52SF-E. ◯ The length of the transmission cable wiring is longer than specified (longer than maximum 200 m from the power supply unit, longer than 500 m between ends).	◯ In a system connected to MELANS, perform the group setting with the MELANS. (Do not perform the group setting with PZ-52SF-E.) ◯ Check the length of the transmission cable wiring. (Refer to page C-36.)
6	When power is supplied to the system, the display of PZ-52SF-E goes blank and the system does not start.	◯ The restricted number of connected PZ-52SF-E units have been exceeded. ◯ The length of the transmission cable wiring is longer than specified (longer than maximum 200 m from the power supply unit, longer than 500 m between ends).	◯ Check the restricted number of remote controller units when using the power supply unit. (Refer to page C-31.) ◯ Check the length of the transmission cable wiring. (Refer to page C-36.)
7	The power display “◉” does not appear on the remote controller when power is supplied to the system.	◯ When using the Lossnay units connected to indoor unit transmission cable side and Lossnay M-NET remote controllers: ①PZ-52SF-E is not correctly connected to the transmission cables of the indoor units. ②The outdoor unit is not turned on. ③The length of transmission cable wiring from the outdoor units is longer than specified (longer than 200 m). ◯ When using a power supply unit ①The power supply unit is not connected with the transmission cable. ②The power supply unit is not turned on. ③The length of the M-NET transmission cable wiring from the power supply unit is longer than specified (longer than 200 m). ◯ The transmission cable power supply restrictions have been exceeded.	① Check the transmission cable connection. ② Check the power of the outdoor unit. ③ Check the length of the transmission cable wiring. (Refer to page C-31.) ① Connect the power supply unit with the transmission cable. ② Check the power of the power supply unit. ③ Check the length of the transmission cable wiring. (Refer to page C-31.) ◯ Make connections within the transmission cable power supply restrictions of the outdoor units, or the power supply units. (Refer to page C-31.)

No.	Error	Cause	Action
8	The remote controller PZ-52SF-E continues to blink “HO” when the power is supplied to the system.	◯ The specified power is not supplied to Lossnay.	◯ Check the power to Lossnay.
		◯ Group setting of the PZ-52SF-E address has not been performed with MELANS.	◯ Check the address registration of PZ-52SF-E with MELANS (“HO” displays for 3 to 10 minutes when power is supplied to the system).
		◯ Group setting has been performed with PZ-52SF-E.	
		◯ The M-NET transmission cable is connected to TM4 ①, ②.	◯ Connect the transmission cable to TB5 Ⓐ, Ⓑ.
		◯ For a Lossnay individual system with no MELANS, Lossnay registration has not been performed by PZ-52SF-E.	◯ Check the Lossnay registration with PZ-52SF-E.
		◯ Lossnay address setting (SA1, SA2) is wrong.	◯ Verify the address (SA1, SA2) and register them again.
		◯ Lossnay address setting (SA1, SA2) was changed.	
		◯ The transmission cable power supply restrictions have been exceeded.	◯ Make connections within the transmission cable power supply restrictions of the outdoor units, or the power supply units. (Refer to page C-31.)
		◯ Group setting has not been performed after replacement of the circuit board.	◯ Perform group setting again.
9	“LC 6608” appears on the remote controller and the Lossnay does not operate.	◯ PZ-60DR-E is connected to the terminal block (TB5 Ⓐ, Ⓑ) for the M-NET transmission cable.	◯ When using PZ-60DR-E, connect to the terminal block (TM4 ①, ②) for the remote controller transmission cable.
		◯ Rather than PZ-52SF-E, PZ-41SLB-E is connected to the M-NET transmission cable.	◯ Change to the PZ-60DR-E or PZ-52SF-E remote controller. (PZ-41SLB-E cannot be used with the M-NET.)
10	The operation from MELANS and Lossnay operation differ.	◯ PZ-41SLB-E is connected to Lossnay.	◯ Change to the PZ-60DR-E or PZ-52SF-E remote controller. (PZ-41SLB-E cannot be used with the M-NET.)
		◯ PZ-60DR-E is connected by crossover cable with multiple Lossnay units of a separate group.	◯ Do not connect PZ-60DR-E with multiple Lossnay units of a separate group.

Note: PZ-60DR-E and PZ-52SF-E cannot be used in the same group.

10.2.2 Troubleshooting 2

- An error code displays on the remote controller.
- The LED on the Lossnay circuit board is blinking or lit up.

An error code displayed on the remote controller (PZ-60DR-E, PZ-41SLB-E, PZ-52SF-E) or the M-NET controller, and blinking or illumination of LED1 (green) or LED2 (red) on the circuit board shows the type of error. The LED blink interval is 0.25 seconds for both on and off. The display duration is approximately 5 seconds.

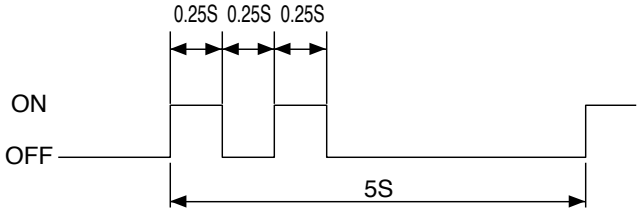

Error display example: (Two blinks)

Checklist of error codes displayed on the PZ-60DR-E (when not using M-NET) or PZ-41SLB-E, and LED displays (Table2-1)

Error code	LED1 (green)	LED2 (red)	Error	Cause	Action
LC 6608	—	—	Lossnay communication error	◯ When using multiple Lossnay units, the Main/Sub setting has not been made for the second unit and following units. ◯ Multiple transmission cables are wired using multi core cables. ◯ Transmission cable and power cable are too close. ◯ Transmission cable is not securely connected. ◯ The length of the transmission cable wiring is longer than specified (longer than 500 m).	◯ Turn off the main power supply and set the Main/Sub selection switch (SW1) (first unit to "Main", second and following units to "Sub"). ◯ Using suitable cables, wire the transmission cables so that they are separated from one another. ◯ Wire the transmission cable at least 5 cm away from the power supply cable. ◯ Check the transmission cable connection. ◯ Check the length of the transmission cable wiring.
RC6608 SRC 6608	—	—	Communication error between remote controllers (when two remote controllers are connected)	◯ Multiple transmission cables are wired using multi core cables. ◯ Transmission cable and power supply cable are too close. ◯ Transmission cable is not securely connected. ◯ The length of the transmission cable wiring is longer than specified (longer than 500 m).	◯ Using suitable cables, wire the transmission cables so that they are separated from one another. ◯ Wire the transmission cable at least 5 cm away from the power supply cable. ◯ Check the transmission cable connection. ◯ Check the length of the transmission cable wiring.
RC 6201,6202 SRC 6201,6202	—	—	Remote controller error	◯ The remote controller has broken down.	◯ Replace the remote controller.
LC 0900 SLC 0900	—	—	Lossnay trial operation	◯ Trial operation switch on the Lossnay circuit board (SW2-1) is set to ON.	◯ Check the trial operation switch. (Refer to page C-76)
LC 3126 SLC 3126	8 blinks	—	External device error	◯ When the TM3 ⑥, ⑦ output setting switch (SW5-6) is ON, the following conditions are applied. • OA temperature is still -10°C or lower, 60 minutes after the output started • OA temperature is 15°C or higher within 15 minutes after the output started • OA temperature is 70°C or higher	◯ When external devices are connected, check the external devices. ◯ When external devices are not connected, check the TM3 ⑥, ⑦ output setting switch (SW5-6). (Refer to page C-75)

Error code	LED1 (green)	LED2 (red)	Error	Cause	Action
LC 3602 SLC 3602	3 blinks	—	Damper related error	◯ Damper board operation is not correct. ◯ Connectors for the damper unit are not correctly connected. ◯ The switch (SW5-10) setting is incorrect.	◯ Remove the rod, and check whether the damper board can be moved manually. ◯ Check the connection of the lead wire connectors and the circuit connector. ◯ Check the switch (SW5-10) setting. (Refer to page C-72) LGH-15 to 100 types: OFF LGH-150 and 200 types: ON
LC 4116 SLC 4116	2 blinks	—	Fan motor operation drive error *1	◯ The Lossnay fan does not stop due to a breakdown of the fan motor operation drive of the circuit board. ◯ Fan motor error	◯ Check and replace the circuit board. ◯ Check and replace the fan motor.
LC 5101 SLC 5101	4 blinks	—	OA thermistor related error	◯ Connectors for the thermistor are not correctly connected.	◯ Check the connection of the lead wire connectors and the circuit connectors.
LC 5102 SLC 5102	5 blinks	—	RA thermistor related error	◯ Connectors for the thermistor are not correctly connected.	◯ Check the connection of the lead wire connectors and the circuit connectors.
———	9 blinks	—	Remote controller communication error	◯ No Lossnay unit is set to “Main”. ◯ Multiple transmission cables are wired using multi core cables. ◯ Transmission cable and power supply cable are too close. ◯ Transmission cable is not securely connected. ◯ The length of the transmission cable wiring is longer than specified (longer than 500 m).	◯ Turn off the main power, and set the Main/Sub selection switch (SW1). (Set the first unit to “Main” and the second and following units to “Sub”.) ◯ Using suitable cables, wire the transmission cables so that they are separated from one another. ◯ Wire the transmission cable at least 5 cm away from the power supply cable. ◯ Check the transmission cable connection. ◯ Check the length of the transmission cable wiring.
“CLEANING” “FILTER” blinking	—	—	Filter cleaning warning according to total hours of operation	◯ It is time to clean the Lossnay air filter.	◯ After cleaning the air filter, press the “FILTER” button of the remote controller two times.
“CLEANING” “CORE” blinking	—	—	Lossnay core cleaning warning according to total hours of operation (PZ-60DR-E)	◯ It is time to clean the Lossnay core.	◯ After cleaning the Lossnay core, press the “FILTER” button of the remote controller two times.
“PLEASE WAIT” blinking	blinking	—	System is starting (PZ-60DR-E)	◯ LED1 blinks at 1 second intervals during starting operation (maximum of 45 seconds).	◯ This is not an error.
“HO” blinking	blinking	—	System is starting (PZ-41SLB-E)	◯ LED1 blinks at 1 second intervals during starting operation (maximum of 45 seconds).	◯ This is not an error.
———	Lit	—	In delay operation	◯ “DELAY OPERATION ‘ON’” is set from PZ-60DR-E. ◯ Delay setting switch (SW5-1) on the Lossnay circuit board is set to ON.	◯ This is not an error. ◯ This is not an error.
———	—	Lit	No M-NET connection information	◯ LED2 will be lit when M-NET is not used.	◯ This is not an error.

Note: LC: “Main” Lossnay SLC: “Sub” Lossnay RC, SRC: remote controller (PZ-60DR-E or PZ-41SLB-E)

*1 The LGH-150 and 200 types do not display errors.

Checklist of error codes displayed on PZ-60DR-E (when using M-NET), PZ-52SF-E or M-NET controllers, and LED displays(Table2-2)

Error code	LED1 (green)	LED2 (red)	Error	Cause	Action
6600	—	6 blinks	Multiple address error	◯ There is another unit with the same address setting.	◯ Check the addresses of devices in the system.
6607 6608	—	8 blinks	No ACK error *2 No answer error (M-NET communi-cation error)	◯ Power is not supplied to Lossnay. ◯ Lossnay address was changed. ◯ Multiple transmission cables are wired using multi core cables. ◯ Transmission cable is not securely connected. ◯ The length of the transmission cable wiring is longer than specified (longer than maximum extension 200 m, longer than 500 m between ends).	◯ Check the power supply to Lossnay. ◯ Check the Lossnay address. ◯ Using suitable cables, wire the transmission cables so that they are separated from one another. ◯ Check the transmission cable connection. ◯ Check the length of the transmission cable wiring. (Refer to page C-36.)
0900	—	—	Lossnay trial operation	◯ Trial operation switch on the Lossnay circuit board (SW2-1) is set to ON.	◯ Check the trial operation switch. (Refer to page C-68)
3126	8 blinks	—	External device error	◯ When the TM3 ⑥, ⑦ output setting switch (SW5-6) is ON, the following conditions are applied. • OA temperature is still -10°C or lower, 60 minutes after the output started • OA temperature is 15°C or higher with-in 15 minutes after the output started • OA temperature is 70°C or higher	◯ When external devices are connect-ed, check the external devices. ◯ When external devices are not con-nected, check the TM3 ⑥, ⑦ output setting switch (SW5-6). (Refer to page C-75)
3602	3 blinks	—	Damper related error	◯ Damper board operation is not cor-rect. ◯ Connectors for the damper unit are not correctly connected. ◯ The switch (SW5-10) setting is incorrect.	◯ Remove the rod, and check whether the damper board can be moved manually. ◯ Check the connection of the lead wire connectors and the circuit connector. ◯ Check the switch (SW5-10) setting. (Refer to page C-72) LGH-15 to 100 types: OFF LGH-150 and 200 types: ON
4116	2 blinks	—	Fan motor operation drive error *1	◯ The Lossnay fan does not stop due to a breakdown of the fan motor operation drive of the circuit board. ◯ Fan motor error	◯ Check and replace the circuit board. ◯ Check and replace the fan motor.
5101	4 blinks	—	OA thermis-tor related error	◯ Connectors for the thermistor are not correctly connected.	◯ Check the connection of the lead wire connectors and the circuit con-nectors.
5102	5 blinks	—	RA thermis-tor related error	◯ Connectors for the thermistor are not correctly connected.	◯ Check the connection of the lead wire connectors and the circuit con-nectors.
6602 6604	—	1 to 4 blinks	communi-cation cir-cuit section error	◯ Controller where error originally occurred is defective. ◯ Lossnay circuit board is defective.	◯ Check the controller where the error occurred. ◯ Replace the circuit board.
6603	—	5 blinks	Transmissi on cable error	◯ Power is supplied to the same trans-mission cable from two or more power supply units. ◯ The power supply unit is connected to the TB3 side of the power supply expansion unit. ◯ The power supply unit is connected to the indoor and outdoor transmis-sion cables.	◯ Adjust the wiring of the power sup-ply unit.

Error code	LED1 (green)	LED2 (red)	Error	Cause	Action
6801	9 blinks	—	PZ-60DR-E communi-cation error	◯ When using multiple Lossnay units, the Main/Sub setting has not been made for the second unit and following units. ◯ Multiple transmission cables are wired using multi core cables. ◯ Transmission cable and power cable are too close. ◯ Transmission cable is not securely connected. ◯ The length of the transmission cable wiring is longer than specified (longer than 500 m).	◯ Turn off the main power supply and set the Main/Sub selection switch (SW1) (first unit to "Main", second and following units to "Sub"). ◯ Using suitable cables, wire the transmission cables so that they are separated from one another. ◯ Wire the transmission cable at least 5 cm away from the power supply cable. ◯ Check the transmission cable connection. ◯ Check the length of the transmission cable wiring.
"CLEANING" "FILTER" blinking	—	—	Filter cleaning warn-ing according to total hours of operation	◯ It is time to clean the Lossnay air fil-ter.	◯ After cleaning the air filter, press the "FILTER" button of the remote con-troller two times.
"CLEANING" "CORE" blinking	—	—	Lossnay core cleaning warning according to total hours of operation (PZ-60DR-E)	◯ It is time to clean the Lossnay core.	◯ After cleaning the Lossnay core, press the "FILTER" button of the remote controller two times.
"PLEASE WAIT" blinking	blink-ing	—	System is starting (PZ-60DR-E)	◯ LED1 blinks at 1 second intervals during starting operation (maximum of 45 seconds).	◯ This is not an error.
"HO" blinking	blink-ing	—	System is starting (PZ-52SF-E)	◯ LED1 blinks at 1 second intervals during starting operation (maximum of 45 seconds).	◯ This is not an error.
———	—	Lit	No M-NET connection information	◯ The Lossnay units have not been set to group setting (registration).	◯ Check the Lossnay address and confirm that the group setting has been made.
———	Lit	—	In delay operation	◯ "DELAY OPERATION 'ON'" is set from PZ-60DR-E. ◯ Delay setting switch (SW5-1) on the Lossnay circuit board is set to ON.	◯ This is not an error. ◯ This is not an error.

Note: The "LC" characters that are displayed simultaneously with the error code indicate the Lossnay attributes in the M-NET device.

*1 The LGH-150 and 200 types do not display errors.

*2 ACK: Acknowledgement signal from other communicating devices.

10.2.3 Troubleshooting 3 : The remote controller operation is disabled or irregular

Checklist for PZ-60DR-E or PZ-41SLB-E (Table 3-1)

No.	Error	Cause	Action
1	Nothing displays on the LCD.	◯ Transmission cable is connected to the wrong terminal block.	◯ Check the transmission cable connection. (TM4 ①② for the transmission cable from the remote controller)
		◯ No Lossnay unit is set to “Main”.	◯ Turn off the main power supply and set the Main/Sub selection switch (SW1) (first unit to “Main”, and second and following units to “Sub”).
		◯ Power is not supplied to Lossnay.	◯ Check the power supply to Lossnay.
		◯ Power that does not follow specifications is used.	◯ Check the power supply.
		◯ Transmission cable is not securely connected.	◯ Check the transmission cable connection.
		◯ The length of the transmission cable wiring is longer than specified (longer than 500 m).	◯ Check the length of the transmission cable wiring.
2	Starts or stops, or the display changes, by itself.	◯ Multiple transmission cables are wired using multi core cables.	◯ Using suitable cables, wire the transmission cables so that they are separated from one another.
		◯ Transmission cable and power supply cable are too close.	◯ Wire the transmission cable at least 5 cm away from the power supply cable.
3	Displays an error code that is not in the check list.	◯ Liquid crystal display characters on the remote controller are missing.	◯ Replace the remote controller.
		◯ Poor return action of the remote controller buttons.	◯ Replace the remote controller.
4	Cannot stop the Lossnay with the remote controller. (“CENTRAL” is displayed)	◯ Operation of the remote controller has been prohibited by MELANS.	◯ Check the setting of the MELANS.
		◯ “INTERLOCK MODE” is set to “oUT” (external input given priority).	◯ Check the interlock mode setting. (Refer to page C-76)
		◯ Remote/local switching (CN32) is set to “Remote.”	◯ Check the remote/local switching (CN32). (Refer to page C-71)
5	Cannot stop the Lossnay with PZ-60DR-E. (“24HR VENTILATION” is displayed).	◯ 24-hour ventilation is set to “on” with the PZ-60DR-E function selection.	◯ Check the 24-hour ventilation setting with the PZ-60DR-E function selection. (Refer to page C-89)
6	Cannot switch fan speed with the remote controller.	◯ High/Low/Extra Low fan speed switching external input (CN16) is ON.	◯ Check the High/Low/Extra Low fan speed switching input (CN16). (Refer to page C-70 and C-73)
		◯ When using PZ-60DR-E, “POWER VENT START” is set to “on” with the function selection of the remote controller.	◯ Check the setting of “power supply/exhaust when operation starts” with the PZ-60DR-E function selection. (Refer to page C-90)
		◯ When not using PZ-60DR-E, the function selection switch for “Power supply/exhaust when operation starts” (SW2-3) on the Lossnay circuit board is set to ON.	◯ Check the function selection switch (SW2-3). (Refer to page C-73)
		◯ When using PZ-60DR-E, the supply fan speed setting and the exhaust fan speed setting are set to “L” with the function selection of the remote controller.	◯ Check the supply fan speed setting and the exhaust fan speed setting with the PZ-60DR-E function selection. (Refer to page C-90)
		◯ When not using PZ-60DR-E, the function selection switches for “Supply fan fixed at Low speed”, and “Exhaust fan fixed at Low speed” (SW2-4, SW2-5) on the Lossnay circuit board are set to ON.	◯ Check the function selection switches (SW2-4, SW2-5). (Refer to page C-73)
		◯ In a mixture of the LGH-15 to 100 types and the LGH-150 and 200 types, the 150 and 200 types are set to “Main”. (Extra Low fan speed operation is not available.)	◯ Set the LGH-15 to 100 types to “Main” and the LGH-150 and 200 types to “Sub”. (Refer to page C-69)

No.	Error	Cause	Action
7	The ventilation mode cannot be switched with the remote controller.	◯ The bypass ventilation switching external input (CN16) is set to ON.	◯ Check the bypass ventilation switching input (CN16). (Refer to page C-70)
8	When the main power supply is turned on, the remote controller display will indicate and Lossnay will start.	◯ When using PZ-60DR-E, “RECOVERY SETTING” is set to “on” or “AUTo” with the function selection of the remote controller. ◯ When not using PZ-60DR-E, the function selection switch (SW2-6 or SW5-4) on the Lossnay circuit board is set to ON. ◯ When using PZ-41SLB-E, the main power supply was turned off during operation.	◯ Check the power supply ON/OFF/AUTO setting with the PZ-60DR-E function selection. (Refer to page C-90) ◯ Check the function selection switch (SW2-6 or SW5-4). (Refer to page C-73 and C-75) ◯ When using PZ-41SLB-E, the operation prior to switching off the power will return when the main power supply is turned on. Switch off the main power supply approximately 10 seconds after Lossnay stop with the remote controller.
9	There is no power failure automatic return.	◯ When using PZ-60DR-E, “RECOVERY SETTING” is set to “oFF” with the function selection of the remote controller. ◯ When not using PZ-60DR-E, the function selection switch (SW5-4) on the Lossnay circuit board is set to ON.	◯ Check the power supply ON/OFF/AUTO setting with the PZ-60DR-E function selection. (Refer to page C-90) ◯ Check the function selection switch (SW5-4) on the Lossnay circuit board. (Refer to page C-75)
10	The fan does not stop even though the remote controller is set to stop.	◯ Operation monitor with delay function is set to ON. (Function selection switch SW2-8 or SW5-6 is set to ON)	◯ Check the function selection switch (SW2-8 or SW5-6). (Refer to page C-74 and C-75)
11	When using PZ-60DR-E, Lossnay starts or stops operating, or the fan speed changes, by itself.	◯ Timer function has been set with PZ-60DR-E. ◯ “NIGHT PURGE” is set to “on” with PZ-60DR-E.	◯ Check the timer function setting with PZ-60DR-E. ◯ Check the night purge setting of PZ-60DR-E. If enabled, this is not an error. (Refer to page C-90)
12	When PZ-60DR-E is used, Lossnay does not operate in accordance with the timer setting.	◯ When a different timer has been set with each remote controller in a two remote controller system, the resultant operation will not be in accordance with the setting.	◯ Perform the timer setting with one remote controller only, and use the other remote controller as “(Timer off indicator)”.
13	“CLEANING” “FILTER” / “CLEANING” “CORE” (PZ-60DR-E), or “FILTER” (PZ-41SLB-E) continues to blink and the display cannot be reset.	◯ The display is reset incorrectly. ◯ The remote controller has broken down.	◯ During Lossnay operation, press the “FILTER” button two times (within 3 seconds). ◯ Replace the remote controller.

Note: When two remote controllers are used, the combination of the PZ-60DR-E and PZ-41SLB-E cannot be used.

Checklist for PZ-52SF-E (Table 3-2)

No.	Error	Cause	Action
1	Nothing displays on the LCD.	◯ Transmission cable is connected to the wrong terminal block. ◯ There is no power supply unit (for Lossnay only systems). ◯ The power supply unit is not turned on. ◯ Transmission cable is not securely connected. ◯ Wiring length of the transmission cable from the power supply unit or the outdoor unit is longer than specified (maximum extension 200 m).	◯ Check the transmission cable connection (TB5Ⓐ,Ⓑ for M-NET transmission cables). ◯ Install the power supply unit. ◯ Check the power to the power supply unit. ◯ Check the transmission cable connection. ◯ Check the length of the transmission cable wiring. (Refer to page C-31.)

No.	Error	Cause	Action
2	Continues to display “HO” and does not start.	◯ It is less than 10 minutes since the power was supplied to the system.	◯ After supplying power to the system, “HO” blinks for a maximum of about 10 minutes. (This is not an error.)
		◯ Group setting (registration) has not been performed.	◯ Perform the group setting (registration). If using MELANS, register with the MELANS. If there is only PZ-52SF-E, register with it.
		◯ The PZ-52SF-E address has not been registered in the group setting by MELANS.	◯ Check the group setting with the MELANS.
		◯ Power supply to the Lossnay is not turned on.	◯ Check the power supply to Lossnay.
		◯ Power that does not follow specifications is used.	◯ Check the power supply.
		◯ Transmission cable is connected to the wrong terminal of the Lossnay unit.	◯ Check the transmission cable connection (TB5Ⓐ,Ⓑ for M-NET transmission cables).
		◯ Lossnay address was changed.	◯ Check the Lossnay address.
		◯ Lossnay circuit board was replaced.	◯ If the circuit board has been replaced, perform the group settings again.
		◯ The length of the transmission cable wiring is longer than specified (longer than maximum extension 200 m, longer than 500 m between ends).	◯ Check the length of the transmission cable wiring. (Refer to page C-36.)
3	Cannot register the Lossnay with PZ-52SF-E or MELANS.	◯ Power is not supplied to Lossnay.	◯ Check the power supply to Lossnay.
		◯ Power that does not follow specifications is used.	◯ Check the power supply.
		◯ Transmission cable to the Lossnay is not connected.	◯ Check the transmission cable connection.
		◯ Transmission cable is connected to the wrong terminal of the Lossnay unit.	◯ Check the transmission cable connection (TB5Ⓐ,Ⓑ for M-NET transmission cables).
		◯ Lossnay address was changed.	◯ Check the Lossnay address.
		◯ The length of the transmission cable wiring is longer than specified (longer than maximum extension 200 m, longer than 500 m between ends).	◯ Check the length of the transmission cable wiring. (Refer to page C-36.)
4	Starts or stops, or the display changes, by itself.	◯ The Lossnay unit is set for interlock operation with City Multi.	◯ Cancel the interlock mode setting.
5	Displays an error code that is not in the checklist.	◯ Liquid crystal display characters on the remote controller are missing.	◯ Replace the remote controller.
6	Cannot stop Lossnay with the remote controller. (“CENTRAL” is displayed)	◯ Operation of the remote controller has been prohibited by MELANS.	◯ Check the settings of the MELANS.
		◯ “INTERLOCK MODE” is set to “oUT” (external input given priority).	◯ Check the interlock mode setting. (Refer to page C-76)
		◯ Remote/local switching (CN32) is set to “Remote.”	◯ Check the remote/local switching (CN32). (Refer to page C-71)

Note: PZ-60DR-E and PZ-52SF-E cannot be used in the same group.

10.2.4 Troubleshooting 4 : The Lossnay operation is disabled or irregular

Lossnay checklist (Table 4)

No.	Error	Cause	Action
1	The fan does not operate. The fan does not operate normally.	◯ Connectors for the fan or connectors for the Lossnay circuit board section are not correctly connected.	◯ Check the lead wire connectors and the Lossnay circuit board section connectors.
		◯ Power is not supplied to the Lossnay, or power that does not follow specifications is used.	◯ Check the power supply.
		◯ When using M-NET, Lossnay group setting is not performed. (LED2 lights)	◯ Check the Lossnay address and the group setting. (LED2 lights when not using M-NET. This is not an error.)
2	Interlocked operation with external devices (air conditioners) does not occur.	◯ The type of external signal does not match the connected terminal block (charged, uncharged, Mr. Slim signal).	◯ Check the external signal type and the external control input terminal (TM2) connection.
		◯ The type of external signal does not match the pulse input setting (level signal, pulse signal).	◯ <When using PZ-60DR-E> Check the external signal type and the pulse input setting from the function selection. <When not using PZ-60DR-E> Check the external signal type and the pulse input setting switch (SW2-2) on the Lossnay circuit board. (Refer to page C-73).
		◯ The external device signal is not being input.	◯ Check the external device.
		◯ The external device and signal cable wiring is longer than specified. (12 V DC, 24 V DC: Longer than limitations of external device Uncharged a-contact: Longer than 500 m Mr. Slim signal: Longer than 500 m)	◯ Check the wiring length of the signal cable.
		◯ The Delay operation is set with the function selection of PZ-60DR-E or PZ-41SLB-E, or the function selection switch (SW5-1) on the Lossnay circuit board.	◯ Check the delay operation setting of PZ-60DR-E or PZ41SLB-E, and the function selection switch (SW5-1) on the Lossnay circuit board. (Refer to page C-74)
		◯ The ON Interlocked or OFF Interlocked is set with the function selection of PZ-60DR-E or PZ-41SLB-E, or the function selection switches (SW5-7, SW5-8) on the Lossnay circuit board.	◯ Check the interlock mode setting of PZ-60DR-E, PZ41SLB-E, or the function selection switches (SW5-7, SW5-8) on the Lossnay circuit board. (Refer to page C-76)
		◯ When using multiple Lossnay units, the external control input signal is connected to a “Sub” Lossnay.	◯ Connect the external control input signal to the “Main” Lossnay.
		◯ In a group of multiple Lossnay units with M-NET, the external control input signal is connected to a Lossnay unit other than the one with the smallest address.	◯ Connect the external control input signal to the Lossnay unit with the smallest address in the group.
		◯ There is a communication error with the remote controller or MELANS.	◯ Check the remote controller or MELANS.
3	Fan will not stop.	◯ Trial operation switch (SW2-1) on the Lossnay circuit board is set to ON.	◯ Check the trial operation switch (SW2-1). (Refer to page C-76)
		◯ The TM4 ⑨, ⑩ output setting switch (SW2-8) or the TM3 ⑥, ⑦ output setting switch (SW5-6) on the Lossnay circuit board is set to ON.	◯ When SW2-8 or SW5-6 is ON, the fan will stop 3 minutes after OFF operation of the remote controller. (Refer to page C-74 and C-75)

No.	Error	Cause	Action
4	Lossnay operates when the main power is turned on.	◯ When using PZ-60DR-E, “RECOVERY SETTING” is set to “on” or “AUTo” with the function selection of the remote controller. ◯ When not using PZ-60DR-E, the function selection switches (SW2-6 or SW5-4) on the Lossnay circuit board are set to ON. ◯ When using PZ-41SLB-E, the main power supply was turned off during operation.	◯ Check the power supply ON/OFF/AUTO setting with the PZ-60DR-E function selection. (Refer to page C-90) ◯ Check the function selection switches (SW2-6 or SW5-4) (Refer to page C-73 and C-75) ◯ When using PZ-41SLB-E, the operation prior to switching off the power will return when the main power supply is turned on. Switch off the main power supply approximately 10 seconds after Lossnay stop with the remote controller.
5	Takes in air from outdoors during interlocked operation with a Mr. Slim or a City Multi, but supply air fan does not stop when defrosting.	◯ The outdoor air intake setting of the PAC indoor unit or the PAC remote controller is not enabled.	◯ Set the outdoor air intake to “ON” with the indoor unit or the PAC remote controller.
6	The supply air fan and exhaust air fan both periodically stop operating.	◯ In a system that Lossnay has duct connections and interlocked with Mr. Slim or City Multi indoor units, when “EA SETTING DEFROST” is set to “oFF” with PZ-60DR-E, or when the function selection switch (SW5-3) on the Lossnay circuit board is ON, the fans will stop during air conditioner defrosting.	◯ Check the exhaust operation setting for air conditioner defrosting with the PZ-60DR-E function selection, or the function selection switch (SW5-3). (Refer to page C-75 and C-90)
7	Fan speed will not change.	◯ High/Low/Extra Low fan speed switching external input (CN16) is ON. ◯ When using PZ-60DR-E, “POWER VENT START” is set to “on” with the function selection of the remote controller. ◯ When not using PZ-60DR-E, the function selection switch for “Power supply/exhaust when operation starts” (SW2-3) on the Lossnay circuit board is set to ON. ◯ When using PZ-60DR-E, the supply fan speed setting and the exhaust fan speed setting are set to “L” with the function selection of the remote controller. ◯ When not using PZ-60DR-E, the function selection switches for “Supply fan fixed at Low speed”, and “Exhaust fan fixed at Low speed” (SW2-4, SW2-5) on the Lossnay circuit board are set to ON. ◯ Trial operation switch (SW2-1) on the Lossnay circuit board is set to ON. ◯ In a mixture of the LGH-15 to 100 types and the LGH-150 and 200 types, the 150 and 200 types are set to “Main”. (Extra Low fan speed operation is not available.)	◯ Check the High/Low/Extra Low fan speed switching input (CN16). (Refer to page C-62) ◯ Check the setting of “power supply/exhaust when operation starts” with the PZ-60DR-E function selection. (Refer to page C-90) ◯ Check the function selection switch (SW2-3). (Refer to page C-73) ◯ Check the supply fan speed setting and the exhaust fan speed setting with the PZ-60DR-E function selection. (Refer to page C-90) ◯ Check the function selection switches (SW2-4, SW2-5). (Refer to page C-73) ◯ Check the trial operation switch (SW2-1). (Refer to page C-76) ◯ Set the LGH-15 to 100 types to “Main” and the LGH-150 and 200 types to “Sub”. (Refer to page C-69)

No.	Error	Cause	Action
8	The damper board does not operate.	◯ The outdoor air temperature is 8°C or lower. ◯ The bypass ventilation switching external input (CN16) is set to ON. ◯ During the night purge operation ◯ Damper board operation is not correct. ◯ Connectors for the thermistor are not correctly connected. ◯ Connectors for the damper are not correctly connected. ◯ The trial operation switch (SW2-1) on the Lossnay circuit board is turned ON.	◯ Check the outdoor air temperature. ◯ Check the bypass ventilation switching input (CN16). (Refer to page C-70) ◯ Check the display of the PZ-60DR-E. ("🌙" is displayed) ◯ Remove the rod, and check whether the damper board can be moved manually. ◯ Check the connections of the lead wire connectors and the circuit connectors. ◯ Check the connections of the lead wire connectors and the circuit connectors. ◯ Check the trial operation switch (SW2-1) on the Lossnay circuit board. (Refer to page C-76)
9	Operation monitor output is OFF during operation.	◯ When the "OPERATION MONITOR" is set to "2" with the PZ-60DR-E function selection, or when the function selection switch (SW5-2) on the Lossnay circuit board is ON, because there is operation monitor output interlocked with the air supply fan, the operation monitor output will turn OFF when the outdoor temperature is -10°C or less, or at the time of air conditioner defrosting.	◯ Check the operation monitor output setting with the PZ-60DR-E function selection, or the function selection switch (SW5-2) on the Lossnay circuit board. (Refer to page C-72 and C-90)
10	Delay operation does not work even though Delay operation is set.	◯ Pulse input setting is set to ON.	◯ <When using PZ-60DR-E> Check the pulse input setting from the function selection. (Refer to page C-90) <When not using PZ-60DR-E> Check the setting of the pulse input switch (SW2-2) on the Lossnay circuit board. (Refer to page C-73).
11	Night purge operation does not work even though Night purge operation is set.	• The night purge conditions have not been satisfied. • Lossnay has been started or stopped during the display of "🌙 (Night purge)". • Night purge operation will not be performed when "CENTRAL" is displayed.	• Check whether these are the night purge operation conditions. (Refer to page C-82 and C-90) • When Lossnay has been started or stopped during the display of "🌙", the night purge operation will not be performed until 1:00 of the next day.
12	The fan does not stop even though the remote controller is set to stop.	◯ Operation monitor with delay function is set. (Function selection switch (SW2-8 or SW5-6) is set to ON)	◯ Check the setting of the function selection switch (SW2-8 or SW5-6). The fan will stop 3 minutes after the remote controller OFF operation. (Refer to page C-74 and C-75)
13	The damper board does not operate correctly.	◯ The switch (SW5-10) setting is incorrect.	◯ Check the switch (SW5-10) setting. LGH-15 to 100 types: OFF LGH-150 and 200 types: ON (Refer to page C-72)

It is normal in the following cases.

No.	Error	Cause
1	Immediately after turning on the main power, LED1 (green) on the Lossnay circuit board blinks.	LED1 blinks at 1 second intervals during starting operation (maximum of 45 seconds).
2	LED1 (green) on the Lossnay circuit board is lit.	LED1 will be lit during the delay operation when the delay operation setting is enabled.
3	LED2 (red) on the Lossnay circuit board is lit.	LED2 will be lit when M-NET is not used.
4	When PZ-60DR-E is used, the operation will not be in accordance with the setting of the function selection switch on the Lossnay circuit board.	As for the Lossnay function selection, the function selection setting by PZ-60DR-E will have priority.
5	When PZ-60DR-E is used, button operations of the remote controller will result in a display of “NOT AVAILABLE”.	“NOT AVAILABLE” will be displayed in the following circumstances: • When the ““Extra Low” fan speed” button has been operated with the LGH-150 or 200 type connected. • When the “timer menu” button or the “timer on/off” button has been operated with timer function set to “TIMER MODE OFF”. • When the operation lock setting (i.e., pressing “FILTER” and “ON/OFF” buttons at the same time) has been performed with the “LOCKING FUNCTION” is set to “oFF”.
6	Button operations are not accepted immediately when the function selection mode or the maintenance mode is entered from the normal display of PZ-60DR-E, or when returning to the normal display from the function selection mode or the maintenance mode.	Button operations may not be accepted immediately depending on communication processing. When an operation has not been accepted, perform the operation after several seconds have passed.
7	“24 HR VENTILATION” is not displayed on the PZ-60DR-E function selection.	This is not displayed because the LGH-150 and 200 types do not have a 24 hour ventilation function.
8	When two PZ-60DR-E remote controllers are used, “24HR VENTILATION”, “LOSSNAY FUNCTION”, and “INTERLOCK SETTING” of the function selection mode can be set only from one of the remote controllers.	When two remote controllers are used, “24 HR VENTILATION”, “LOSNNAY FUNCTION”, and “INTERLOCK SETTING” can be set only with the “Main” remote controller. The “Main” and “Sub” remote controller will be determined automatically by communication when the main unit power is turned on. The remote controller on which “24HR VENTILATION”, “LOSSNAY FUNCTION”, and “INTERLOCK SETTING” are displayed is the “Main” remote controller.
9	Even when the clock use setting is set to “on” with PZ-60DR-E, the day of the week and time are not displayed.	When “SIMPLE TIMER” has been set with the timer function setting, the day of the week and time are not displayed.
10	When two PZ-60DR-E remote controllers are used, the display of the day of the week and time differs.	When a remote controller has been replaced or added, the day of the week and time display will not match; therefore, perform a day of the week and time setting with either one of the remote controllers.

No.	Error	Cause
11	When PZ-60DR-E is used, the timer operation does not work.	Timer operation does not work in the following circumstances: • When the timer function is set to OFF. • During the day of the week and time setting / During function selection / During timer setting • When “CENTRAL” is displayed.
12	When PZ-41SLB-E is used, the operation will not be in accordance with the setting of the function selection switch on the Lossnay circuit board.	The settings will be disabled for switches (SW2-6, SW5-1, SW5-4, SW5-5, SW5-7, and SW5-8).
13	When PZ-60DR-E is used, “FUNCTION (“Locked” indicator)” is displayed, and the remote controller cannot be operated.	In the following circumstances “FUNCTION (“Locked” indicator)” is displayed, and the applicable function button cannot be operated. • The operation lock is enabled. (Buttons other than the “ON/OFF” button, or all buttons) • When operating with the High / Low / Extra Low fan speed switching input (“Fan Speed Adjustment” button, and “Extra Low fan speed” button) • When operating with the bypass ventilation switching input. (“Function selector” button) • During the night purge operation. (“Function selector” button) • When two remote controllers are used, one of the remote controllers is set to the function selection mode or the maintenance mode. (All buttons)
14	The supply air fan periodically stops operating.	• When the outdoor temperature is -10°C or lower, the fan is periodically stopped for approximately 10 minutes to prevent freezing of the Lossnay core. (Cold region specifications) • When the Lossnay unit has duct connections and interlocked with Mr. Slim or City Multi indoor units, the fan will stop during air conditioner defrosting.
15	The Lossnay unit starts by itself at night.	When the night purge setting is set to “on”, the night purge operation will be performed at nighttime.
16	Night purge operation does not work even though Night purge operation is set.	The night purge operation will not be performed in the following circumstances: • The night purge conditions have not been satisfied. • Lossnay has been started or stopped during the display of “☽ (Night purge)”. • Night purge operation will not be performed when “CENTRAL” is displayed.
17	Damper board does not operate.	When switching the ventilation mode with the remote controller, a maximum delay of 30 seconds will be generated depending on the timing.
18	Delay operation does not work even though Delay operation is set.	• Delay operation will not start until 2 hours after the Lossnay stopped. • When the pulse input setting is set to “on”, delay operation will not start. • When using PZ-60DR-E and PZ-41SLB-E, operation will be according to the setting of the remote controller.
19	Operation monitor output will not be output until several seconds after the fan started operation.	When the TM4 ⑨, ⑩ output setting is set to operation monitor with delay function 1 (SW2-8 is ON), the operation monitor will be output 10 seconds after the fan started operation.
20	After operation has been stopped with the remote controller, the fan continues to run for a while.	When the TM4 ⑨, ⑩ output setting is set to operation monitor with delay function 1 (SW2-8 is ON), or when the TM3 ⑥, ⑦ output setting is set to operation monitor with delay function 2 (SW5-6 is ON), the fan will stop 3 minutes after stop with the remote controller.

11. Installation method

11.1 Electrical installation

With this product, the wiring installation method will vary according to the design of the system.
Perform electrical installation to meet local electrical regulations.

* Always use double insulated PVC cable for the transmission cables.
* Wiring work must be performed by qualified professionals.
* All supply circuits must be disconnected before obtaining access to the terminal devices

11.1.1 Names of components in control box

LGH-15 to 100 RX5

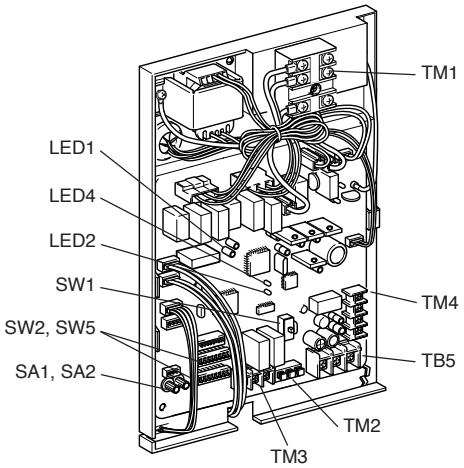

11.1.2 Wire connection diagram

* Connect the wires shown as thick lines.
* Be sure to connect the ground wire.
* A power supply isolator must be installed when wiring power supply to unit.
* Always use a single pole isolator for the main switch power connection.

Definitions of symbols			
M1:	Motor for exhaust fan	CN5:	Connector (Thermistor)
M2:	Motor for supply fan	CN6:	Connector (Microswitch)
C:	Capacitor	CN7:	Connector (Motor for By-pass operation)
GM:	Motor for By-pass movement	TAB3:	Tab connector (Fan motor)
LS:	Microswitch	TAB5:	Tab connector (Fan motor)
TH1:	Thermistor for outside air	CN9:	Connector (Fan motor)
TH2:	Thermistor for return air	CN10:	Connector (Fan motor)
SW1:	Switch (Main/Sub change)	CN16:	Connector (High/Low/Extra-Low/BY-PASS switch)
SW2,5:	Switch (Function selection)	CN32:	Connector (Remote control selection)
TM1:	Terminal block (Power supply)	SA1:	Address setting rotary switch (10 digit)
TM2:	Terminal block (External control input)	SA2:	Address setting rotary switch (1 digit)
TM3:	Terminal block (Monitor output)	LED1:	Inspection indicator lamp
TM4:	Terminal block (Transmission cable and monitor output)	LED2:	Inspection indicator lamp
TB5:	Terminal block (M-NET Transmission cable)	LED4:	Power supply indicator lamp
TAB1,TAB2:	Connector (Power supply)	SYMBOL	◎ □ :Terminal block
TR:	Control circuit transformer		⦶ : Connector
X10:	Relay contact		⦶ : Board insertion connector or fastening connector of control board.
X11:	Relay contact		
X12:	Relay contact		
CN1:	Connector (Transformer primary)		
CN2:	Connector (Transformer secondary)		

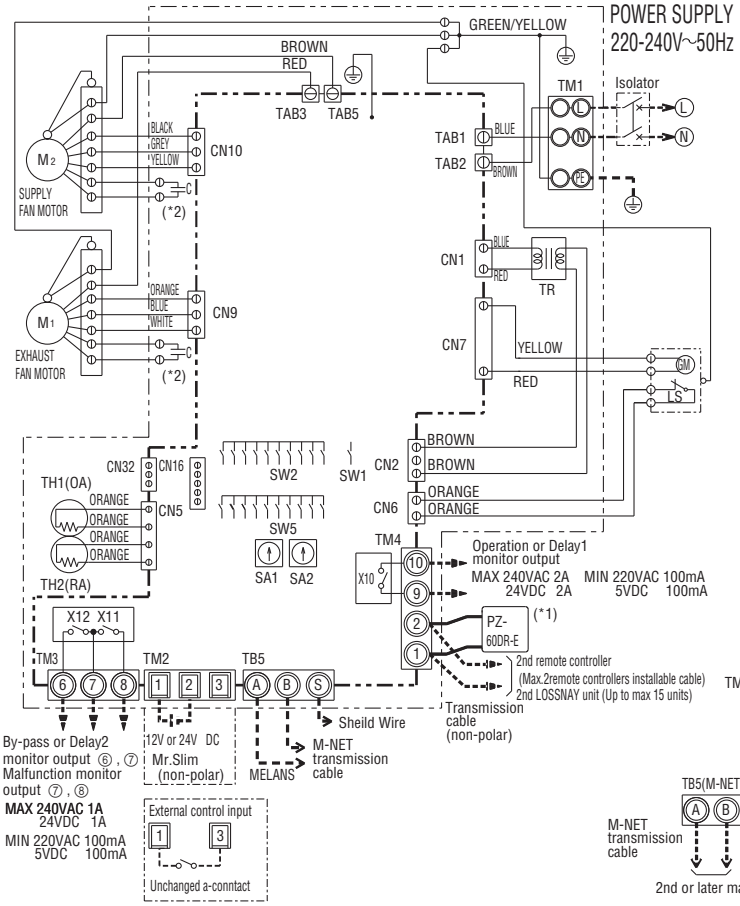

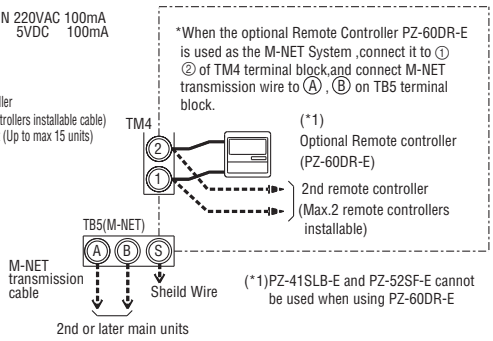

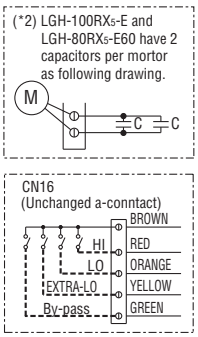

11.1.3 Wire connection diagram ----- Models LGH-150 and 200 RX5

* Connect the wires shown as thick lines.
* Be sure to connect the ground wire.
* A power supply isolator must be installed when wiring power supply to unit.
* Always use a single pole isolator for the main switch power connection.

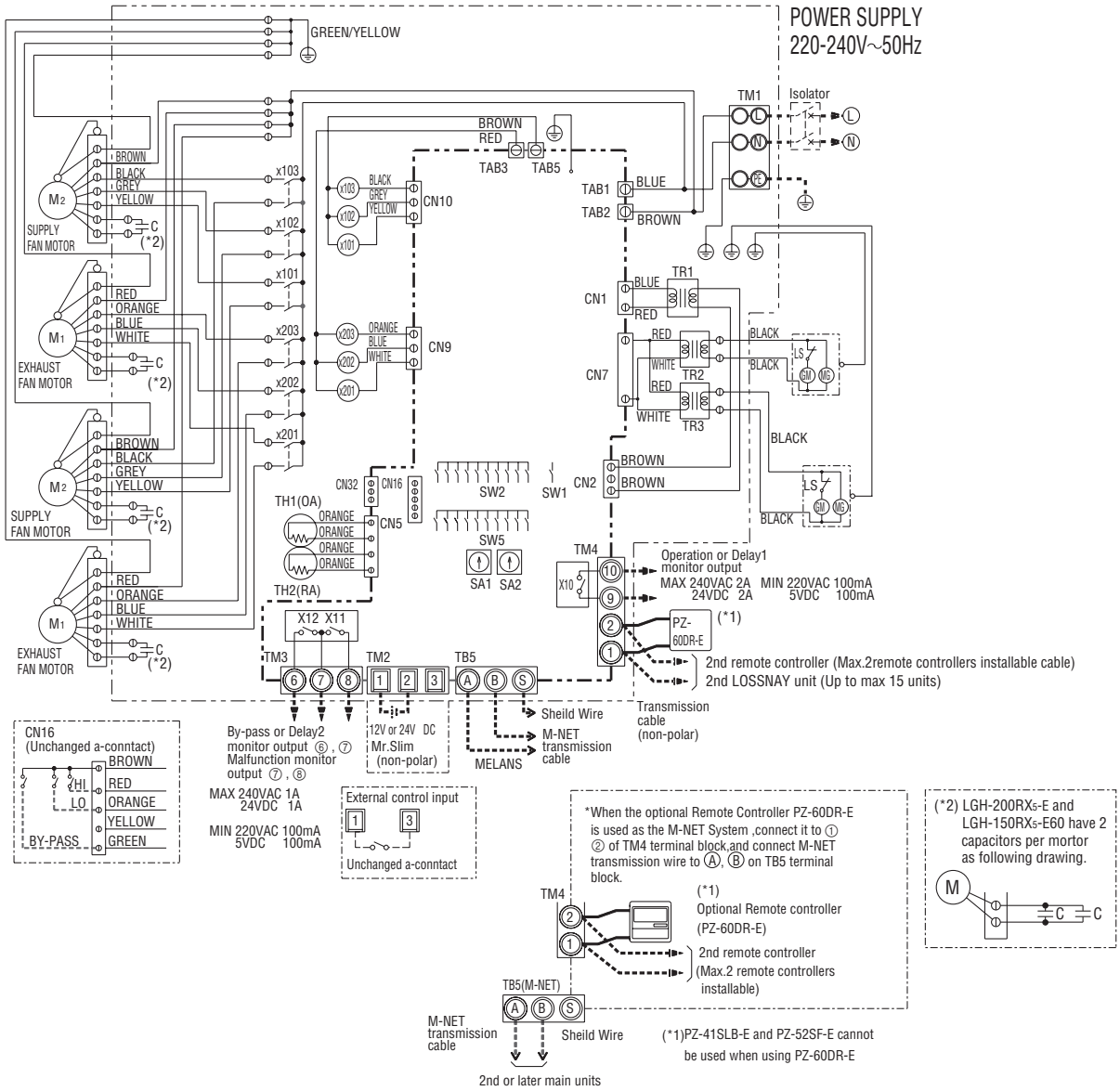

Definitions of symbols			
M1: Motor for exhaust fan	TM4: Terminal block (Transmission cable and monitor output)	CN1: Connector (Transformer primary)	CN32: Connector (Remote control selection)
M2: Motor for supply fan	TB5: Terminal block (M-NET Transmission cable)	CN2: Connector (Transformer secondary)	SA1: Address setting rotary switch (10 digit)
C: Capacitor	TAB1,TAB2:Connector(Power supply)	CN5: Connector (Thermistor)	SA2: Address setting rotary switch (1 digit)
GM: Motor for By-pass movement	TR1: Control circuit transformer	CN7: Connector (Motor for By-pass operation)	Symbol ◎ ▣ : terminal block
LS: Microswitch	TR2,TR3:By-pass movement transformer	TAB3: Tab connector(Fan motor)	⦶ : Connector
TH1: Thermistor for outside air	X10,X11,X12: Relay contact	TAB5: Tab connector(Fan motor)	⦶ : Board insertion connector or fastening connector of control board
TH2: Thermistor for return air	X101,X102,X103: Relay Supply fan speed control	CN9: Connector (Fan motor)	
SW1: Switch(Main/Sub change)	X201,X202,X203: Relay Exhaust fan speed control	CN10: Connector (Fan motor)	
SW2,5: Switch (Function selection)		CN16: Connector (High/Low/By-pass switch)	
TM1: Terminal block (Power supply)			
TM2: Terminal block (External control input)			
TM3: Terminal block (Monitor output)			

• PZ-41SLB-E and PZ-52SF-E cannot be used simultaneously.

11.2 Connecting the power supply cable

1. Remove the screws and the control box cover

LGH-15 to 100 RX5

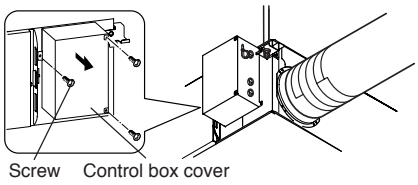

LGH-150 and 200 RX5

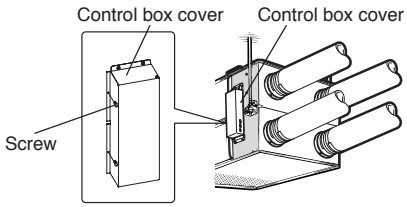

2. Connecting the power supply cable and transmission cable

LGH-15 to 100 RX5

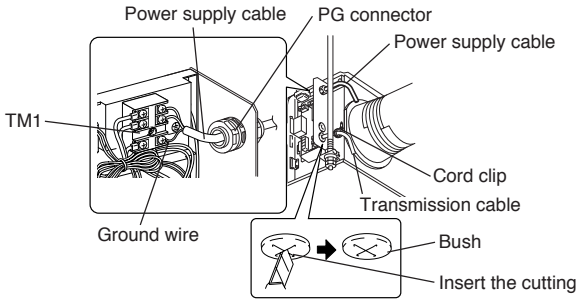

LGH-150 and 200 RX5

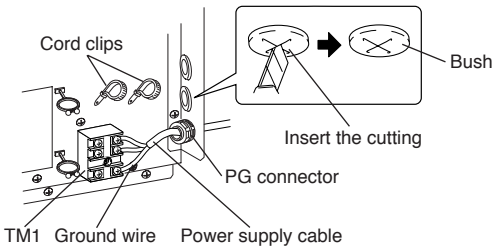

Pass the power cable through the bush* and connect to the TM1 terminal block using the round terminals. Connect the ground wire to the ground terminal and secure tightening the bush. (*: for PG connector or the like)

CAUTION:

- Always separate the power supply cable and transmission cable by 5 cm or more to prevent malfunctioning of the unit.
- If the length of the stripped power cables wires is too long, the conductors may touch and short out.
- Power supply cable size : 1.5mm^2 or more.

(1) Tighten the ground wire and transmission cables to the terminal block.
(2) Secure the transmission cables using the cord clips.

Upon completion of the wiring connections, replace the control box cover.

11.3 System configuration

The following system configuration can be created. Connect the necessary parts.

1. When connecting with remote controller (PZ-60DR-E, PZ-41SLB-E).
2. When interlocked with indoor unit of air conditioner or other external device including other manufactures.
3. When interlocking with a pulse output device.
4. When operating multiple Lossnay units.
5. When take malfunction monitor output, or take By-pass operation monitor output.
6. When connect to an Electrically operated damper, or take operation monitor output.
7. When switching High / Low / Extra-Low speed externally (when CO_2 sensor or other device is connected).
8. When switching By-pass externally.
9. When using the remote/local switching and the ON/OFF input (level signal)
10. When connecting to the City Multi, Lossnay remote controller (PZ-52SF-E) or Mitsubishi Electric Air-Conditioner Network System (MELANS).

CAUTION:

- When connecting external devices (electrically operated damper, lamp, monitoring unit, etc.) using output signals of the Lossnay unit, make sure to install safety equipment for the external devices. (It could cause fire, damage, etc. without safety equipment.)

1. When connecting with remote controller (PZ-60DR-E, PZ-41SLB-E)

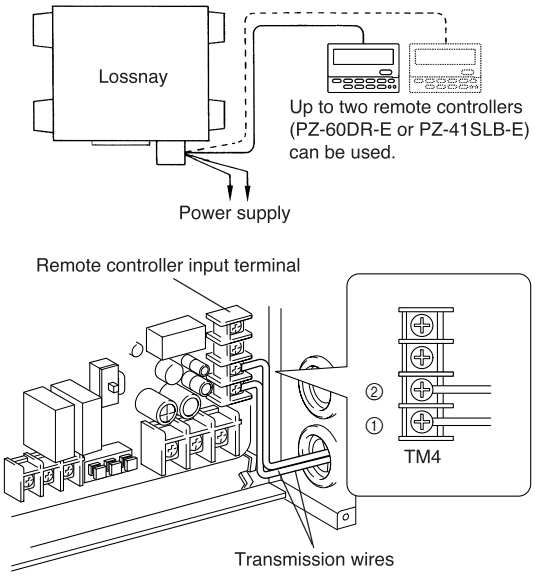

* When controlling Lossnay units with the central control, connect wires according to 10 (Refer to C-71).

Securely connect the transmission cable (PVC insulated PVC jacketed and either between ø 0.65 and ø 1.2, or between 0.3 mm^2 and 1.25 mm^2 in cross section) from the remote controller to ① and ② of the input terminal block (TM4). (No polarity)

- If there are two remote controllers, connect them in the same way.

Note:

- Don't tighten screws of terminal block with a torque larger than 0.5 Nm. It could damage the PCB.
- Number of transmission wires which can be connected to single input terminal is up to 4 wires for ø 0.65 PVC wire or 0.3 mm^2 stranded wire. It is up to 2 wires for any other wires.
- PZ-41SLB-E cannot be used when MELANS centralized control of the Lossnay is used.
- PZ-60DR-E and PZ-41SLB-E cannot be installed simultaneously.

2. When interlocked with indoor unit of air conditioner or other external device including other manufactures

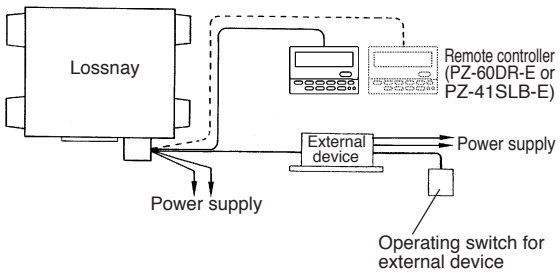

(1) Connect the output signal cable from the external device to the input terminal block (TM2) of the external controller.

CAUTION:

- The connection may vary according to the output signal type of the external unit.
- Don't tighten screws of terminal block with a torque larger than 0.5 Nm. It could damage the PCB.

(2) Confirm that the pulse input switch (SW2-2) is set to "OFF". (Set to "OFF" at time of shipment.)

When using Mitsubishi Mr. Slim air conditioner with MA Remote controller

It is possible to interlock the operation between LGH and Mr.Slim by connecting TM2 - 1and 2 (Lossnay side) and CN2L (Mr.Slim side).
Following table shows the Lossnay operation conjunction with Mr.slim operation.

Function	Lossnay Supply duct connection to the Indoor unit.	Mr.Slim indoor unit setting (MA Remote controller setting)		Lossnay LGH Unit setting		Lossnay operation with Mr.Slim
		Lossnay Connectivity (Fresh Air Intake)		Exhaust fan operation when Defrosting Air conditioner		During Mr.Slim defrost operation
		Mode No.	Setting No.	Dip SW Setting		
Lossnay Connectivity	Not connected (Factory setting)	03	1	—	—	N/A
	Connected (indoor unit is not equipped with outdoor air intake)		2	Lossnay SW5-3	OFF (Factory Setting)	Lossnay keep the fans on.
					ON	
	Connected (indoor unit is not equipped with outdoor air intake)		3		OFF (Factory Setting)	Lossnay stop the supply fan.
					ON	Lossnay stop both of the supply fan and Exhaust fan.

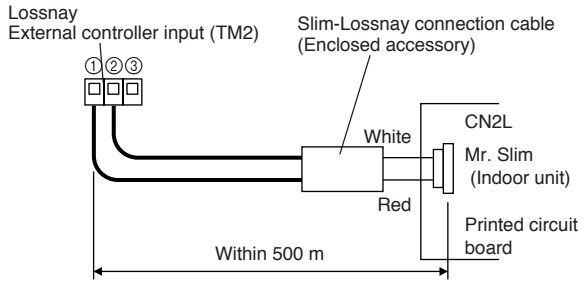

(1)Connect the interlocking cable connector side to CN2L on the circuit board for the indoor Mr. Slim unit, then connect the lead wire side to the ① and ② of the input terminal block (TM2) for the Lossnay external controller input. (No polarity)

- Always separate the power supply cable and the Slim-Lossnay connection cable by 5 cm or more to prevent the unit from malfunctioning.
- The Slim-Lossnay connection cable is 0.25 m long. When wiring, extend it as far as necessary.

Note:

- The Lossnay remote controller (PZ-60DR-E, PZ-41SLB-E) cannot be used with this system.
- Use MA remote controller of Mr. Slim for switching Lossnay ON/OFF or the fan speed.
- The ventilation mode is “automatic ventilation”.
- The Slim-Lossnay connection cable may be extended to a maximum length of 500m. (Extension cable specifications are as detailed below)
  Ensure that all connections are secure and that the appropriate insulation is provided. Use extension cable sheathed PVC cable or cable 0.5 mm^2 to 1.0 mm^2.

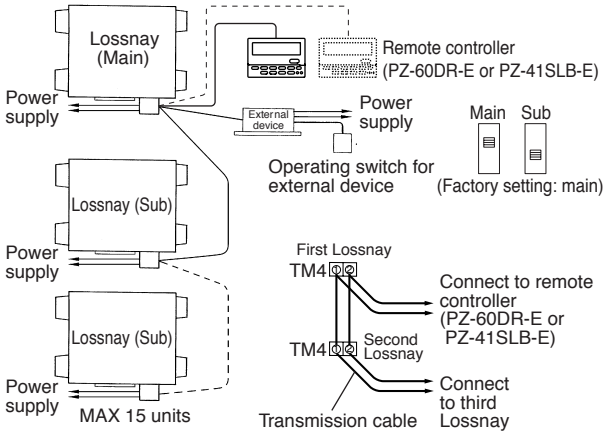

(2)Multiple Lossnay units connection

Connect from Lossnay unit 1(First Lossnay unit) to Lossnay unit 2, and from unit 2 to unit 3 and so on up to 15 units by TM4 1and2. Change the setting on the main /sub switch(SW1) on the second and subsequent Lossnay units to sub.

When the external device has a charged operating signal of 12 VDC or 24 VDC

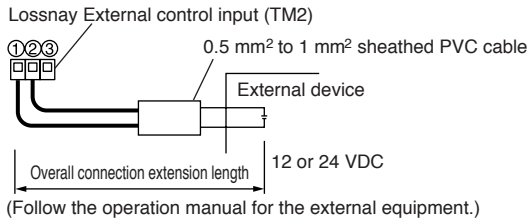

- Connect the operating signal (wire) from the external device via the remote output to ① and ② on the external control input terminal block (TM2). (No polarity)

When the external device has an uncharged a-contact signal

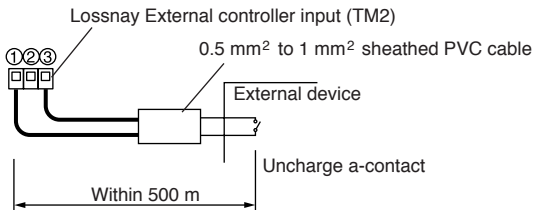

- Connect the operating signal (wire) from the external device via the remote output to ① and ③ on the external control input terminal block (TM2).

CAUTION:

- If an optocoupler or any other type of polar coupler is used at the uncharged a-contact, connect the positive side to 3 and the negative side to ①.

3.When interlocking with a pulse output device

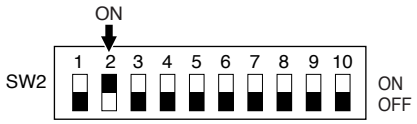

(1) Move the pulse input switch [SW2-2] to the ON position.(Refer to function settings 1 (Refer to C-73) “Settings for pulse input”.)

(2) Connect the pulse output device (i.e., building management system) to the external control input terminal block [TM2].

- A pulse width of at least 200 msec will be needed.
- When using PZ-60DR-E, it can be set also from the remote controller.

Connecting methods vary depending on the types of pulse signal

Refer to Section 2 (Refer to C-67) “When the external device has a charged operation signal of 12 VDC or 24 VDC” or “When the external device has an uncharged a-contact signal”.

4.When operating multiple Lossnay units

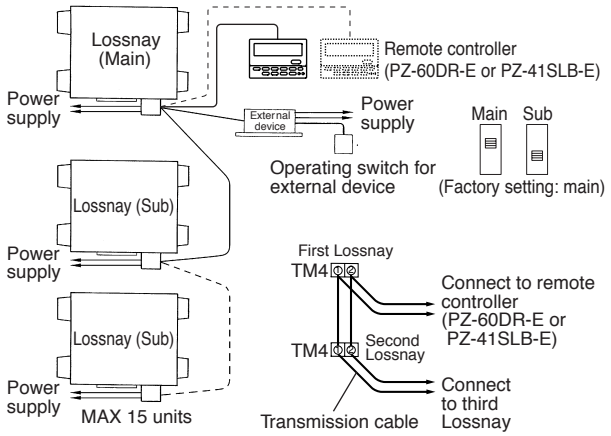

(1) Connect from Lossnay Unit 1 to Lossnay Unit 2, and from Unit 2 to Unit 3 and so on up to a maximum of 15 units using a transmission cable (PVC insulated PVC jacketed and either between ø 0.65 and ø 1.2, or between 0.3 mm^2 and 1.25 mm^2 in cross section).

(2) Change the setting on the main/sub switch (SW1) on the second and subsequent Lossnay units to “Sub”.

CAUTION:

- Don’t tighten screws of terminal block with a torque larger than 0.5 Nm. It could damage the PCB.

Note:

- Up to four 0.3 mm^2 stranded wires or ø 0.65 PVC wires can be connected to one input terminal.
- For other types of wire, up to two can be connected.
- The operation signal and pulse signal can be connected to the external device of the main Lossnay only.
- Connect the power to each respective Lossnay unit.
- When the LGH-150RX5 and LGH-200RX5 types are connected, they operate at low fan speed even if extra low fan speed is selected.

5.When take Malfunction monitor output, or take By-pass operation monitor output

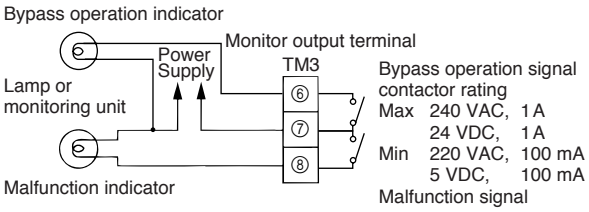

Connect to ⑥ and ⑦, or ⑦ and ⑧ of the monitor output terminal block (TM3) with reference to the wire connection diagram.

Note:

- Don’t tighten screws of terminal block with a torque larger than 0.5Nm. It could damage the PCB.

By-pass or Delay 2 monitor output with delay function 2 can be possible.

(Refer to function settings 13 (Refer to C-75) “Setting for TM3 ⑥⑦”)

6. When connect to an Electrically operated damper, or take Operation monitor output

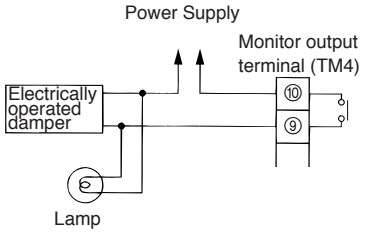

Contactor rating
Max 240 VAC, 2A
24 VDC, 2A
Min 220 VAC, 100 mA
5 VDC, 100 mA

Connect the power supply cable from the Electrically operated damper to ⑨ and ⑩ of the monitor output terminal block (TM4) with reference to the wire connection diagram.
Operation monitor output with delay function 1 can be possible.
(Refer to function settings 6 (Refer to C-74) “Setting for TM4 ⑨⑩”)

Note:

- Don’t tighten screws of terminal block with a torque larger than 0.5Nm. It could damage the PCB.
- Response times to external input signals are as shown in the following table.

External Signal	Response Time
Level Signal	Max. 7 sec.
Pulse Signal	Max. 200 msec

7.When switching High/Low/Extra-Low fan speed externally (when CO_2 sensor or other equipment is connected)

Using marketed CO_2 sensor, etc., make connection by inserting the optional remote display adaptor (PAC-SA88HA-E) in the connector CN16 (High/Low selector) as shown by the figure.

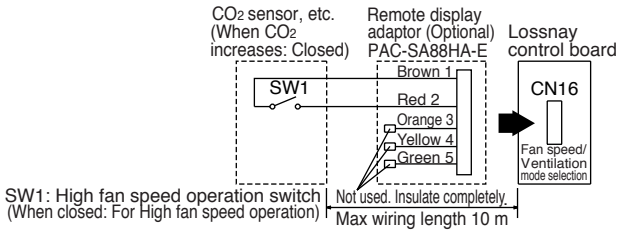

■ To force High fan speed externally
When SW1 is "ON", fan speed of the Lossnay will be set to "High"(Extra-High) regardless of the remote control setting. Use this in such a way that it ventilates at Low or Extra-Low fan speed normally, and when the external sensor detects contamination of indoor air, it changes to High (Extra High) fan speed operation.

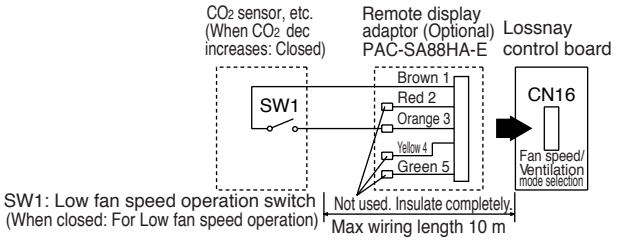

■ To force Low fan speed externally
When SW1 is "ON", fan speed of the Lossnay will be set to "Low" regardless of the remote control setting.
Use this in such a way that it ventilates at High fan speed normally, and when the external sensor detect that the indoor air contamination is low, it changes to Low fan speed operation.

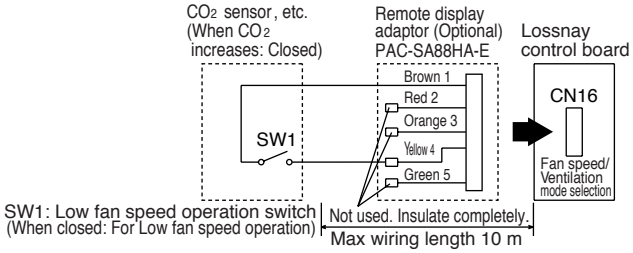

■ To force Extra-Low fan speed externally
When SW1 is "ON", fan speed of the Lossnay will be set to "Extra-Low" regardless of the remote control setting.
Use this in such a way that it ventilates at High fan speed normally, and when the external sensor detects that the indoor air contamination is low, it changes to Extra-Low fan speed operation.
* For the LGH-150RX5 and LGH-200RX5 types, fan speed of the Lossnay will be “Low”.

8.When switching By-pass externally

Establish the wire connection by inserting the optional remote display adaptor (PAC-SA88HA-E) in the connector CN16 (Ventilation mode selector).

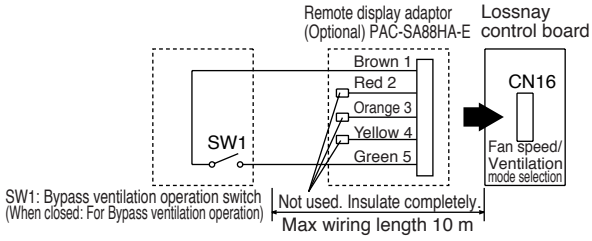

With SW1 is “ON”, the ventilation mode of Lossnay is changed to the By-pass ventilation regardless of the setting on the remote controller.
* When the outdoor air temperature drops lower than 8°C, it changes to the heat exchanger ventilation. (Display of the remote controller does not change.)

9.When using the remote/local switching and the ON/OFF input (level signal)

The remoto controller (PZ-41SLB-E) cannot be used.
Insert the optional remote ON/OFF adaptor (PAC-SE55RA-E) in CN32 on the Lossnay control PCB.

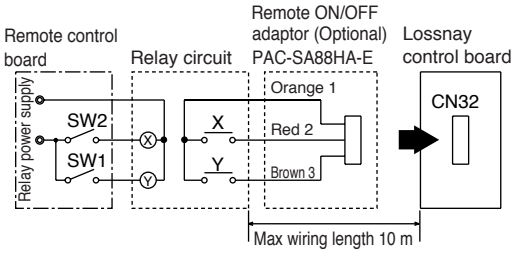

SW1: When this is ON, Lossnay cannot turn ON/OFF by the RemoteController (PZ-60DR-E, PZ-52SF-E).
SW2: When SW1 is ON, Lossnay can be turned ON by setting SW2 at ON or turned OFF by setting SW2 at OFF.
SW1: Remote/local selector switch
SW2: ON/OFF switch
X, Y : Relay (Contactor rating DC 1 mA)

10.When connecting to the City Multi, Lossnay remote controller (PZ-52SF-E) or Mitsubishi Electric Air-Conditioner Network System (MELANS)

* If centralized control is performed according the wire connection shown in this section, the remote controller (PZ-41SLB-E) cannot be used.

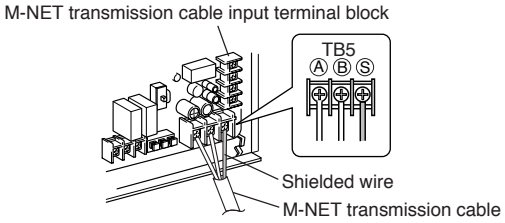

- One shielded wire is connected to TB5 Ⓢ on the PCB on terminal. Address setting is required. (Refer to function setting section C-72.)
  M-NET transmission cable:Connect any of the City Multi indoor unit, or Mitsubishi Electric Air-Conditioner Network System (MELANS) - to the Lossnay.
- Connecting positions are different for the Remote Controller PZ-60DR-E and PZ-52SF-E.

When interlocking with Mitsubishi Free Plan air conditioner

- Incase of PZ-60DR-E

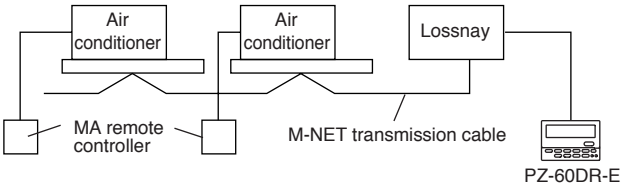

PZ-60DR-E:
Connect to TM4 ①, ② on the PCB. (Refer to C-67) “When connecting with Remote Controller (PZ-60DR-E)”.)

- Incase of PZ-52SF-E

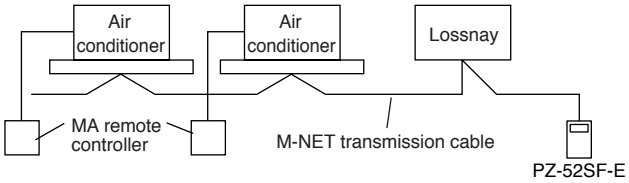

PZ-52SF-E:
Connect to TB5 Ⓐ, Ⓑ on the same terminal block as for the M-NET transmission wires.

When connecting to PZ-60DR-E and MELANS

- Connect the power feeding unit.

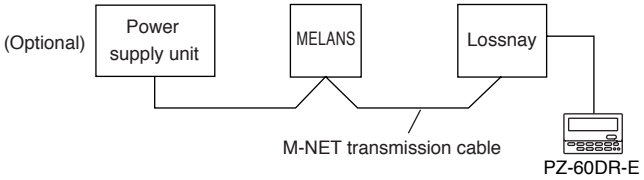

* Limit the total length of transmission wires no longer than 500 m. Limit the wiring length between Lossnay and the power supply unit (Optional) or the outdoor unit no longer than 200 m.

- Securely connect the M-NET transmission wires to TB5 ⒶⒷ. (No-Polar)
  Type: (Shielded wire, CVVS/CPEVS)
  Wire diameter: 1.25 mm^2 to 2.0 mm^2

CAUTION:

- Don’t tighten screws on the terminal block with a torque larger than 0.5 Nm. It may damage the PCB.
- Always use shielded wires only for the M-NET transmission wires, and finish the shield properly.

11.4 Function settings

Address setting is requiered when connecting to City Multi, Lossnay remote controller (PZ-52SF-E) and MELANS.

11.4.1 Setting the address

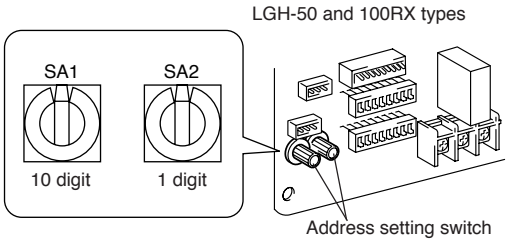

* When the address number has been changed, the data in the memory is automatically reset.

Use the following procedure when setting the address for dedicated Lossnay.
(The method in determining the addresses will depend on the existing system. Refer to the appropriate technical documents for details.)

(1) Remove the control box cover.
(1) Use a flatblade screwdriver to turn the address setting switch on the circuit board.
- SA1 indicates the 10 digit and SA2 indicates the 1 digit.
- The factory setting is "00"

11.4.2 Changing the function selection switches (SW-2 and 5)

Set the selection switches (SW-2 and 5) to perform the appropriate function.

* The function marked (*) above can be set also from the remotecontroller (PZ-60DR-E). If the function is switched later using the remote controller, it operates according to the setting on the remote controller.

(SW2)

1	Trial operation
2	Pulse input setting *
3	Power supply/exhaust when operation starts *
4	SA fan fixed at Low speed *
5	EA fan fixed at Low speed *
6	Power supply ON/OFF *
7	Bypass ventilation priority at Automatic mode *
8	Setting for TM4 ⑨ ⑩ output
9	Supply Extra High/High *
10	Exhaust Extra High/High *

(SW5)

1	Delay setting *
2	Operation monitor output *
3	Exhaust fan stop during defrosting * Exhaust fan at Low speed at outdoor air lower than -15℃
4	Auto restoration after power failure *
5	Filter maintenance indication setting *
6	Setting for TM3 ⑥⑦ output
7	Interlock mode setting *
8	Interlock mode setting *
9	Exhaust fan stop at outdoor air lower than -15℃
10	Not used OFF: LGH-15 to 100RX5 ON : LGH-150 and 200RX5

1. Settings for pulse input
2. Switching to power supply/exhaust when operation starts
3. Switching to the multi ventilation mode
4. Power supply ON/OFF function (cannot be set when PZ-41SLB-E is used)
5. By-pass automatic ventilation priority setting *
6. Setting for TM4 ⑨⑩ output
7. Extra High/High switch setting
8. Set for delay operation at heating or cooling start-up
9. Operation output monitor
10. Exhaust fan stop during defrosting, exhaust fan Low speed operation at outdoor air lower than -15°C
11. Settings for automatic recovery following power supply interruption (cannot be set when PZ-41SLB-E is used)
12. Settings for filter cleaning (cannot be set when PZ-41SLB-E is used)
13. Setting for TM3 ⑥⑦ output
14. Settings for interlock mode
15. Exhaust fan stop at outdoor air lower than -15°C *

1. Settings for pulse input

Set as shown when connecting the pulse signal equipment from a building maintenance system to an external input.

	OFF ON	Mode
SW2	2	No pulse input (factory setting)
	2	Pulse input

2. Switching to power supply/exhaust when operation starts

This sets the fan to run forcibly for 30 minutes when operation starts to ventilate the indoor area. After 30 minutes, the system switches to enable fan speed adjustment from the remote controller. Use this setting if the indoor air is contaminated at night when the system is shut down and you desire to ventilate the indoor area quickly when operation is started in the morning.

	OFF ON	Operation
SW2	3	Normal (factory setting)
	3	Runs the fan forcibly for 30 minutes when operation starts.

3. Switching to the multi ventilation mode

This sets the ventilation system to in the case that ventilation balance in accordance with the use environment and installation location is selected. There are four possible setting modes.

	OFF ON	Mode	Operation
SW2	4 5	Power Ventilation Normal (factory setting)	The fan speed alternates between the High (Extra high) and Low instead of the remote controller setting.
	4 5	Power Supply	Runs the exhaust fan (EA) at Low speed constantly. Alternates the supply fan (SA) speed between the High (Extra high) and Low.
	4 5	Power Exhaust	Runs the supply fan (SA) at Low speed constantly. Alternates the exhaust fan (EA) speed between the High (Extra high) and Low.
	4 5	Power Save Ventilation	Runs the supply fan (SA) and exhaust fan (EA) at Low speed constantly. Switches to the Power Save Ventilation setting regardless of the remote controller's High or Low.

* When using the Remote Controller (PZ-60DR-E), operation of the Extra Low fan speed button initiates the Extra Low fan speed operation both at the supply (SA) and exhaust (EA) sides. Independent operation of the supply (SA) or exhaust (EA) side is prohibited when it is set at the Extra Low fan speed.

4. Power supply ON/OFF function (cannot be set when PZ-41SLB-E is used)

Controls stop and start operation by turning the power supply (220-240 V) for the Lossnay on and off.

	OFF ON	Mode	Operation
SW2	6	OFF (factory setting)	Stop and start is performed according to SW5-4 settings when the power is on.
	6	ON	Operation possible by turning power on and off.

5. By-pass automatic ventilation priority setting

Two thermistors in the Lossnay unit detect the indoor (RA) and outdoor (OA) air temperatures and automatically select the "Lossnay ventilation" or "By-pass ventilation". With this mode, however, priority is given to the "By-pass ventilation".

* This setting reflects to the night purge operation condition.

	OFF ON	Operation
SW2	7 ■□	When outdoor temperature (OA) is 28°C or higher within 24 hours, then By-pass ventilation starts by the comparison OA and RA temperature. The lowest RA temperature of By-pass operation is 24°C (factory setting) When the night purge is set by the remote controller PZ- 60DR-E, night purge operation starts at a temperature of 28°C (within 24 hours).
	7 □■	When outdoor temperature (OA) is 17°C or higher within 24 hours, then By-pass ventilation starts by the comparison OA and RA temperature. The lowest RA temperature of By-pass operation is 19°C When the night purge is set by the remote controller PZ-60DR-E, night purge operation starts at a temperature of 17°C (within 24 hours).

6. Setting for TM4 ⑨⑩ output

	OFF ON	Operation
SW2	8 ■□	Operation monitor output Corresponds to operation mode output (TM4⑨⑩) based on SW5-2 setting. (factory setting)
	8 □■	Operation monitor output with delay function 1 Corresponds to operation mode output (TM4⑨⑩) supply fan with following function. • Starts the output (TM4⑨⑩) 10 seconds after supply fan operates. • Lossnay continues to operate for 3minutes after stopping the output (TM4⑨⑩) Caution : Fan may be operating after turn off the switch of the remote controller.

7. Extra High/High switch setting

Select this function when increased air volume is required or when the duct piping is longer.

	OFF ON	Operation
SW2	9 ■□	Supply fan (SA) - High fixed (factory setting)
	9 □■	Supply fan (SA) - Extra High fixed
	10 ■□	Exhaust fan (EA) - High fixed (factory setting)
	10 □■	Exhaust fan (EA) - Extra High fixed

8. Set for delay operation at heating or cooling start-up

Delays Lossnay operation for 30 minutes when City Multi or Mr. Slim starts operating or when a external device starts operating. (If the PZ-41SLB-E is used, set it at the remote control.)

	OFF ON	Mode
SW5	1 ■□	No operation delay (factory setting)
	1 □■	Operation delay of 30 minutes * This function is invalid within 2 hours' restart

9. Operation output monitor

This setting is available when SW2-8 is OFF.

	OFF ON	Mode
SW5	2 ■□	Corresponds to operation mode output (TM4 ⑨⑩) exhaust fan (factory setting)
	2 □■	Corresponds to operation mode output (TM4 ⑨⑩) supply fan (The operation monitor output is off when the supply fan is stopped for operation in cold regions or during the City Multi or Mr. Slim defrost mode.)

10.Exhaust fan stop during defrosting, exhaust fan Low speed operation at outdoor air lower than -15°C

Sets the operation of the exhaust fan (when the air supply fan is stopped) during defrosting of the air conditioner when Mr. Slim or City Multi indoor unit is connected to a duct.
When the outdoor air is lower than -15°C, stop the operation of exhaust fan. (OA stop operation at cold region)

	OFF ON	Operation
SW5	3 ■□	Exhaust fan operation (factory setting)
	3 □■	Exhaust fan stop, exhaust fan operation at Low speed at outdoor air lower than -15°C

11.Settings for automatic recovery following power supply interruption (cannot be set when PZ-41SLB-E is used)

Sets for automatic recovery following power supply interruption.

	OFF ON	Mode	Operation
SW5	4 ■□	No automatic recovery (factory setting)	Stop after recovery
	4 □■	Automatic recovery	Recover to operate in mode used before power outage

12.Settings for filter cleaning (cannot be set when PZ-41SLB-E is used)

Set the schedule for filter cleaning based on the estimated concentration of dust in the air. Factory setting is unlimited.
* When using PZ-60DR-E, it is also possible to indicate the cleaning cycle of filter (3,000 hours).

	OFF ON	Maintenance time
SW5	5 ■□	Unlimited (No “FILTER” display on remote controller) (factory setting)
	5 □■	3000 hours

CAUTION:

- When the setting for the cumulative operation time of the Lossnay is exceeded, the filter cleaning display will appear on the indoor unit remote controller or the Lossnay remote controller. After cleaning the filter, the filter cleaning display can be reset. Refer to the operating instructions for the remote controller.

13.Setting for TM3 ⑥⑦ output

	OFF ON	Operation
SW5	6 ■□	By-pass ventilation operation monitor output. Corresponds to operation mode output (TM3 ⑥⑦) of By-pass damper. (factory setting)
	6 □■	Operation monitor output with delay function 2. Corresponds to operation mode output (TM3 ⑥⑦) supply fan with following function. • Start the output (TM3 ⑥⑦) 10 seconds after supply fan operates but also when the thermistor for outside air (TH1) detect -5°C or lower. • Stop the output (TM3 ⑥⑦) ,when thermistor for outside air (TH1) detects a temperature higher than 15°C or stop the supply fan or malfunction of TH1. • Lossnay continues to operate for 3 minutes, after stopping the output (TM3 ⑥⑦) • Error code is shown on the remote controller and stop the output in case of followings. 1) TH1 detects higher than 15°C within 15 minutes after the output starts. 2) TH1 detects -10°C or lower, 60 minutes after the output starts. 3) TH1 detects continuously 70°C or higher for more than 1 minute. Caution: Fan may be operating after turn off the switch of the remote controller.

14.Settings for interlock mode

These settings indicate how Lossnay should operate when external devices are started or stopped. (If the PZ-41SLB-E is used, set it at the remote control.)

	OFF ON	Mode	Operation
SW5	7 8	On/Off interlock (factory setting)	The Lossnay will start and stop according to the operation of the external devices. Subsequent operation will be possible using the remote controller for the Lossnay or MELANS.
	7 8	On interlock	The Lossnay will operate whenever external devices are operated. Lossnay stop operation will be possible using its remote controller or MELANS.
	7 8	Off operation	The Lossnay will stop whenever external devices are stopped. Lossnay start operation will be possible using its remote controller or MELANS.
	7 8	External input given priority	The Lossnay will start and stop according to the operation of the external devices. Control via the Lossnay remote controller or MELANS will only be possible when external devices are stopped.

15.Exhaust fan stop at outdoor air lower than -15°C

Set the exhaust fan operation when the outdoor air is lower than -15°C. (Suction stop operation at cold region)

	OFF ON	Operation
SW5	9	Supply fan stop, exhaust fan normal operation (factory setting)
	9	Supply fan stop, exhaust fan stop

11.5 Trial operation

After the system has been installed and before the ceiling panel is installed, make sure that wires are properly connected, then test the system's operation, referring to the operation manual for the remote controller.

11.5.1 Trial operation using the remote controllers (PZ-60DR-E, PZ-41SLB-E and PZ-52SF-E)

Follow the procedure shown in the operation manual for the remote controller the functions below.
(1) Start operation.
(2) Fan speed selection.
(3) Function selection.
(4) Stop operation.

11.5.2 Stand-alone Lossnay trial operation

(1) Supply power to the Lossnay trial operation.
(2) Turn the trial operation switch (SW2-1) "ON."
- Operation will start with the "High" setting and with By-pass ventilation operating. (This will take approximately 1 minute after the power is turned on.)

(3) Confirm that the By-pass damper plate in the Lossnay unit is operated.
(4) Turn the trial operation switch (SW2-1) "Off."

	OFF ON	Operation
SW2	1	Power will be supplied to the motor for the Lossnay fan and operation will be performed at the "High" setting. Power will be supplied to the motor for the Lossnay By-pass and operation of the damper plate will be performed. (Approximately 1 minute)

11.5.3 Complete system trial operation

■ Interlock system containing an indoor unit and/or external device

- Use the remote controller for the indoor unit or the operating switches for the external device and confirm that the indoor unit and Lossnay are interlocked.
- If delay time has been set, check that the Lossnay operates after the delay time has passed.

■ If MELANS System

- Use MELANS to confirm the operation of the Lossnay.

11.5.4 If trouble occurs during trial operation

<table>
<tr><th>Symptom</th><th>Remedy</th></tr>
<tr><td>Will not operate even when the operation switch for the remote controller (PZ-60DR-E, PZ-41SLB-E) and/or operation switch for the Lossnay remote controller (PZ-52SFE) is pressed.</td><td>• Check the power supply. (The specified power supply is single-phase 220-240V ~ 50Hz.)
• Check for a short circuit or disconnection in the transmission cable. (Check that the voltage between terminals in the transmission cables is 9 to 15 VDC for the PZ-60DR-E or PZ-41SLB-E and 20 to 30 VDC for the PZ-52SF-E.)
• Check that the there is 5 cm or more separating the transmission cable from the power supply cable and any other transmission cables.
• Run the Lossnay independently using the trial operation switch (SW2-1) and check if it runs.
Lossnay runs → Check the signal lines
Lossnay doesn't run → Check the power supply
• Check if there are three or more remote controller connected (PZ-60DR-E or PZ-41SLB-E). (The maximum is two.)</td></tr>
<tr><td>"HO" flashes in remote controller for Lossnay (PZ-52SF-E).</td><td>• Perform the registration operation using the remote controller for the Lossnay (PZ-52SF-E) or MELANS. (Refer to the installation instructions for the remote controller for the Lossnay or MELANS.)</td></tr>
<tr><td>When using M-NET, the operation switch of Remote Controller (PZ- 60DR-E), Lossnay remote controller (PZ-52SF-E) or MELANS is dead.</td><td>• Check the power supply. (Specified power supply: single-phase 220-240V, wire dia. ø1.6, switch capacity
• Check if the power supply unit is connected or not, and if the power is supplied or not (For a system with Lossnay only, it is necessary to install the power supply unit.)
• Check the transmission wire for short-circuit or broken wire (Check if DC 20 - 30 V is detected between the terminals of transmission wire).
• Check if a clearance of 5 cm is secured between the transmission wire and the power cable and other transmission wires.
• Run Lossnay independently to see if it operates properly or not.
Lossnay operates → Inspect the transmission wire
Lossnay doesn't operate → Check the power supply</td></tr>
<tr><td>Does not operate even when the operation switch for remote controller for Lossnay (PZ-52SF-E) or MELANS is pressed.</td><td>• Check whether or not there is a power supply unit and that the power has been turned on. (On systems with only a Lossnay, a power supply unit is required.)</td></tr>
<tr><td>Indoor unit or external device does not interlock.</td><td>• Check if the pulse input switch (SW2-2) is off. (Can be set from PZ-60DR-E)
• Check the overall cable length between the indoor unit or external device and Lossnay. (Refer to technical publication or other such documents.)
• Check the connections at the external control input terminal block (TM2).
In the case of voltage charged 12 or 24 VDC output device: Connect to external control input terminals ① and ②.
In the case of uncharged a-contact output device: Connect to external control input terminals ① and ③.
In the case of Mr. Slim (A control or K control): Connect to external control input terminals ① and ②.
• Perform the registration operation using the remote control for the air conditioner or MELANS. (Refer to the installation instructions for the remote controller for the indoor unit or MELANS.)
• Check if the delay has been set.
• Check the overall length of the transmission cable between the external device and Lossnay. (Refer to technical publications or other such documents.)
• Check if the transmission cable from the external device has come off of the external control input terminal. not interlock.
<table>
<tr><th></th><th>Operation signal</th><th>Stop signal</th></tr>
<tr><td>Charged 12 or 24 VDC output device</td><td>12 or 24 VDC</td><td>0 VDC</td></tr>
<tr><td>Uncharged a-contact output device</td><td>Resistance: 0 Ω</td><td>Unlimited resistance Ω</td></tr>
<tr><td>Mr. Slim</td><td>2 to 6 VDC (pulse signal)</td><td>2 to 6 VDC (pulse signal)</td></tr>
</table>
• Check, in the case of multiple units, whether the Main/Sub selection switch on the Lossnay unit which is connected to the external control input terminal is set on the Master setting, and check whether the Main/Sub selection switch on other Lossnay units are set to Sub.</td></tr>
<tr><td>Lossnay does not stop.</td><td>• Check that the trial operation switch (SW2-1) is set to off.</td></tr>
<tr><td>The inspection indicator lamp (LED 1 Green) in the control box flashes.</td><td>
<table>
<tr><td>2 flashes</td><td>Fault on Lossnay circuit</td><td rowspan="5">Turn the power off and consult your dealer.</td></tr>
<tr><td>3 flashes</td><td>Fault on Damper devices</td></tr>
<tr><td>4 flashes</td><td>Fault on Lossnay thermostat (OA side)</td></tr>
<tr><td>5 flashes</td><td>Fault on Lossnay thermostat (RA side)</td></tr>
<tr><td>8 flashes</td><td>Improper OA temperature (outside the range)</td></tr>
<tr><td>On</td><td>Operating</td><td>Unless the Remote Controller (PZ-60DR-E) or remote controller switch (PZ-41SLB-E, etc) is used, the lamp extinguishes (operation stops) 30 minutes later.</td></tr>
</table>
</td></tr>
<tr><td>The inspection indicator lamp (LED 2 Red) in the control box flashes.</td><td>
<table>
<tr><td>1 to 8 flashes</td><td>Error in M-NET communication</td><td>Turn off the power and immediately contact your dealer.</td></tr>
<tr><td>ON</td><td>Registration operation has not been performed.</td><td>Use the controller to perform the registration.</td></tr>
</table>
</td></tr>
</table>

● When an inspection number blinks on the remote controller, follow the procedures shown in the installation and operating manuals provided with the remote controller.

● If the remote controller is not used, operate after approximately 45 seconds of turning on the power for the Lossnay.

12. Lossnay Remote Controller (PZ-60DR-E)

12.1 Parts Names

Display Section

For purposes of this explanation, all parts of the display are shown as lit. During actual operation, only the relevant items will be lit.

Day-of-Week
Shows the current day of the week.

TIME/TIMER Display
Shows the current time, unless the simple timer is set.
If the simple timer is set, shows the time remaining.

Identifies the current operation
Shows the operating mode, etc.
* Multilanguage display is supported.

"CENTRAL" indicator
Indicates that operation of the remote controller has been prohibited by a main controller.

"INTERLOCKED" indicator
Displayed when the Lossnay starts off by interlocked Lossnay unit or external signal.

"Timer Off" indicator
Indicates that the timer is off.

"Night Purge" indicator
Displayed during Night Purge mode

"Locked" indicator
Indicates that remote controller buttons have been locked.

"Clean The Filter and The Lossnay Core" indicators
Comes on when it is time to clean the filter and Lossnay core.

Timer indicators
The indicator comes on if the corresponding timer is set.

"Automatic Fan Speed" indicator
Displayed during automatic fan speed operation

"Fan Speed Adjustment" indicator
Used to select the fan of either Extra Low, Low, High, Extra High.
Extra Low Low High Extra High

(Power On indicator)
Indicates that the power is on.

Ventilation-tilstande
Indicates the ventilation mode status.
Heat exchange HEAT EX.
By-pass BY-PASS
Automatic (Heat ex./By-pass) AUTO HEAT EX. or AUTO BY-PASS

"ERROR CODE" indicator
Displayed together with the malfunctioning unit (3 digits) and an error code (4 digits).

Operation Section

Operation lamp
On during operation. Flashes when a malfunction occurs.

Function selector button
Used to select the ventilation mode from among Heat exchange. By-pass or automatic.

MENU button (MONITOR/SET button)

BACK button

CLOCK button
Back
Ahead

ON/OFF button (DAY button)

Opening the door.

ON/OFF button
Switches between "run" and "stop". Switches between "Operation" and "24-hour Ventilation (Extra Low fan speed)" when 24-hour Ventilation is set.

Fan Speed Adjustment button
Used to select the fan of either Low or High (Extra High).

button (<ENTER> button)

FILTER button
Press two times to reset the filter sign display.

CLEAR button

"Extra Low" fan speed button (OPERATION button)
Selects Extra low fan speed operation
To next operation number.

OPERATION button
To preceding operation number.

Note:
- If you press a button for a feature that is not installed at the Lossnay unit, the remote controller will display the "NOT AVAILABLE" message.
  If you are using the remote controller to drive multiple Lossnay units, this message will appear only if the feature is not present at the main unit.

12.2 Setting the Day of the Week and Time

■ Use this screen to change the current day of the week and time setting.

Note:
The day and time will not appear if clock use has been disabled or the simple timer has activated at Function Selection of remote controller.

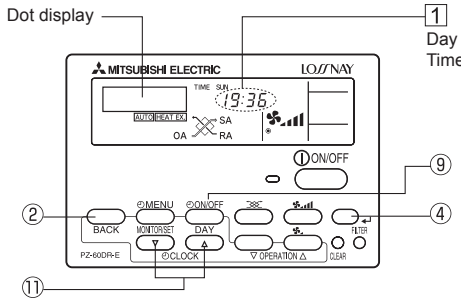

<How to Set the Day of the Week and Time>

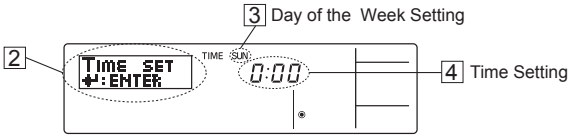

1. Press the ▽ or △ [◴ CLOCK] button ⑪ to show display 2.
2. Press the [◴ ON/OFF (DAY)] button ⑨ to set the day.
   * Each press advances the day shown at 3: SUN→MON→...→FRI→TSA
3. Press the appropriate [◴ CLOCK] button ⑪ as necessary to set the time.
   * As you hold the button down, the time (at 4) will increment first in minute intervals, then in 10-minute intervals, and then in 1-hour intervals.
4. After making the appropriate settings at Steps 2 and 3, press the ↵ button ④ to lock in the values.

Note:
Your new entries at Steps 2 and 3 will be cancelled if you press the BACK button 2 before pressing the ↵ button ④.

5. Press the BACK button ② to complete the setting procedure.This will return the display to the standard control screen, where 1 will now show the newly set day and time.
   * To change the time or day of the week, start from Step 1 above.

Note:
If you are using two remote controllers, setting the time and day of the week in one remote controller will cause the new setting to be applied to the other as well.

12.3 Using the Remote Controller

Typical System Setup

In either case, up to two remote controllers can be used.
Two remote controller operation
- When two individual remote controllers have been installed, the most recent control signals will be given priority.

Independent operation of the Lossnay unit:

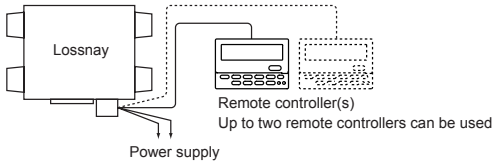

Interlocked operation with an air conditioners, etc.:

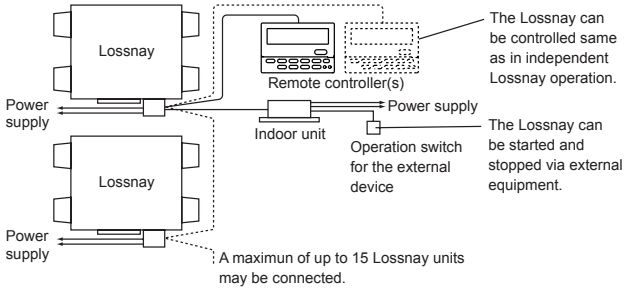

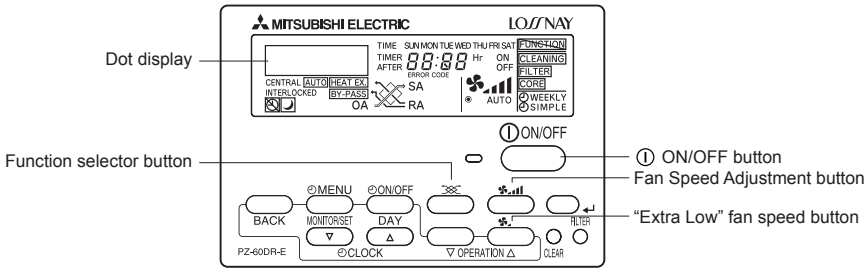

Operation	Relevant button	Relevant display items	Sequence
1. Starting the Lossnay unit	ON/OFF Operation lamp	"High"	Press the [ⓘ ON/OFF] button and confirm that the Operation lamp turns on.
2. Setting the ventilation mode		HEAT EX. "HEAT EX." non-automatic	Press the Function selector button: Each time it is pressed, the corresponding display will change in accordance with the sequence [HEAT EX.] (non-automatic) --> [BY-PASS] (non-automatic) --> [AUTO].
3. Selecting the fan speed		"Low" "Extra High"	Press the Fan Speed Adjustment button to select either Low or High (Extra High) fan speed. High and Extra-High can be selectable by initial setting.
4. Selecting the Extra Low fan speed*1*2		"Extra Low"	Press the "Extra Low" fan speed button. Extra low operation will begin. Pressing the Fan Speed Adjustment button will cause the fan speed to revert to its original speed (before the Extra low mode began). Pressing the Extra Low fan speed button again will return operation to Extra low mode.
5. Stopping the Lossnay unit	ON/OFF Operation lamp		Press the [ⓘ ON/OFF] button.*2 (Press the [ⓘ ON/OFF] button to turn off the Operation lamp.)

*1 If you press a button for a feature that is not installed at the Lossnay unit, the remote controller will display the "NOT AVAILABLE" message.
*2 If set to "24-hour Ventilation", pressing the [ⓘ ON/OFF] button will cause this to be displayed in the dot display "24HR VENTILATION", and the operation will switch to Extra low fan speed mode. To stop operation, press the [ⓘ ON/OFF] button twice within 3 seconds, or press and hold the [ⓘ ON/OFF] button for 5 seconds.

Pressing Function Selector button

Ventilation mode	Display
AUTO	AUTO HEAT EX.
HEAT EX.	HEAT EX.
BY-PASS	BY-PASS

<-- Display will change automatically depending on environmental circumstances. -->

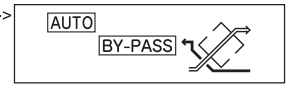

* If either "HEAT EX." or "BY-PASS" is selected and 1 and 2 blink alternately at an interval of five seconds in the dot display, it is recommended to select "AUTO". (The display blinks for a maximum of 10 minutes.)

Using the Timer

This section explains how to set and use the timer. You can use Function Selection of remote controller to select which of three types of timer to use: ① Weekly timer, ② Simple timer

For information about how to set the Function Selection of remote controller, refer to section "Installation Manual", item [5]–3 (2).

Note:

- Weekly Timer and Simple Timer cannot be used at the same time.
- If two remote controllers are connected to one machine or group and the timer is used, set the timer only in one remote controller, and set "Timer disabled" in the other. The system will not operate correctly if two different timers are set in the two remote controllers.

① Using the Weekly Timer

■ The weekly timer can be used to set up to eight operations for each day of the week.
- Each operation may consist of any of the following: ON/OFF time together with fan speed setting, or ON/OFF time only, or fan speed setting only.
- When the current time reaches a time set at this timer, the Lossnay unit carries out the action set by the timer.

■ Time setting resolution for this timer is 1 minute.

Examples

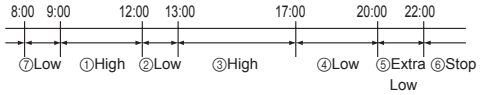

Note:

*1. The weekly timer will not operate when any of the following conditions is in effect.
The timer feature is off; the user is in the process of setting a function; the user is in the process of setting the timer; the user is in the process of setting the current day of the week or time; the system is under central control. (Specifically, the system will not carry out operations (unit on, unit off setting) that are prohibited during these conditions.)

*2. The Weekly timer may be used if the clock use setting is ON (use clock) in Function Selection.

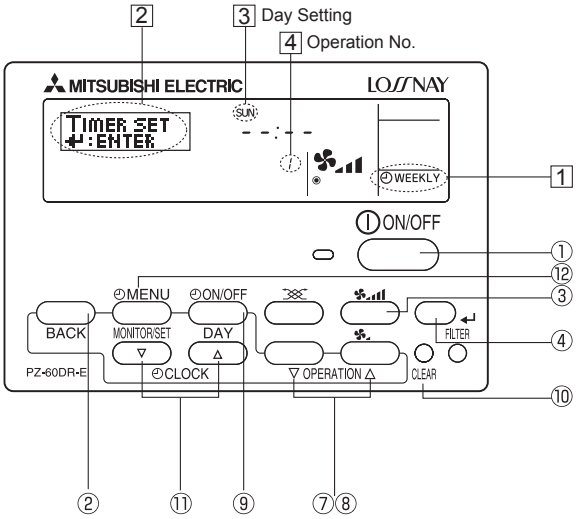

<How to Set the Weekly Timer>

1. Be sure that you are at a standard control screen, and that the weekly timer indicator 1 is shown in the display
2. Press the [◷ MENU] button ⑫, so that the"TIMER SET" appears on the screen (at 2). (Note that each press of the button toggles the display between"TIMER SET" and "TIMER MONITOR".)
3. Press the [◷ ON/OFF (DAY)] button ⑨ to set the day. Each press advances the display at 3 to the next setting, in the following sequence:"SUN MON TUE WED THU FRI SAT" → "SUN"→ ... → "FRI" → "SAT"→ "SUN MON TUE WED THU FRI SAT"...
4. Press the ▽ or △ OPERATION buttons (⑦ or ⑧) as necessary to select the appropriate operation number (1 to 8) 4.
   * Your inputs at Steps 3 and 4 will select one of the cells from the matrix illustrated below.
   (The remote controller display at left shows how the display would appear when setting Operation 1 for Sunday to the values indicated below.)

Setup Matrix

Op No.	Sunday	Monday	...	Saturday
No. 1	• 9:00 • ON • High			
No. 2	• 10:00 • OFF	• 10:00 • OFF	• 10:00 • OFF	• 10:00 • OFF
...				
No. 8				

<Operation 1 settings for Sunday>
Start the Lossnay unit at 9:00, with fan speed set to High.

<Operation 2 settings for every day>
Turn off the Lossnay unit at 10:00.

Note:

By setting the day to "Sun Mon Tue Wed Thu Fri Sat",you can set the same operation to be carried out at the same time every day.
(Example: Operation 2 above, which is the same for all days of the week.)

<How to set the Weekly Timer>

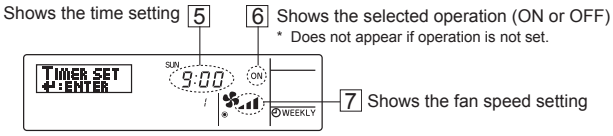

5. Press the appropriate [◷ CLOCK] button ⑪ as necessary to set the desired time (at 5).
   * As you hold the button down, the time first increments in minute intervals, then in 10-minute intervals, and then in 1-hour intervals.
6. Press the [⏻ ON/OFF] button ① to select the desired operation (ON or OFF), at 6.
   * Each press changes the next setting, in the following sequence: No display (no setting) →"ON"→"OFF"

Note:

The timer will not function when not displayed.

7. Press the Fan Speed Adjustment button ③ to set the fan speed (at 7).
   * Each press changes the setting, in the following sequence: No display (no setting) →Extra High→High→Low→Extra Low→No display.

Note:

When not displayed, the system will operate at the currently set fan speed (other than Extra Low)

For the Lossnay models without extra low fan speed, the speed will not be displayed.

8. To clear the currently set values for the selected operation, press and quickly release the CLEAR button ⑩ once.
   * The displayed time setting will change to "—:—", and the On/Off and fan speed settings will all disappear. (To clear all weekly timer settings at once, hold down the CLEAR button ⑩ for two seconds or more.The display will begin flashing, indicating that all settings have been cleared.)

9. After making the appropriate settings at Steps 5, 6, 7. and 8, press the ↵ button ④ to lock in the values.
   * "TIMER SET" indicator flashes three times.

Note:
Your new entries will be cancelled if you press the BACK button ② before pressing the ↵ button ④. If you have set two or more different operations for exactly the same time, only the operation with the highest Operation No. will be carried out.

10. Repeat Steps 3 to 9 as necessary to fill as many of the available cells as you wish.
11. Press the BACK button ② to return to the standard control screen and complete the setting procedure.
12. To activate the timer, press the [◷ ON/OFF] button ⑨, so that the "Timer Off" indication disappears from the screen. **Be sure that the "Timer Off" (at 10) indication is no longer displayed.**
    * If there are no timer settings, the "Timer Off" (at 10) indication will flash on the screen.

<How to View the Weekly Timer Settings>

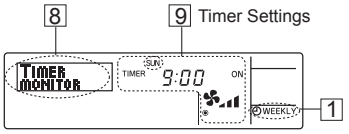

1. Be sure that the weekly timer indicator is visible on the screen (at 1).
2. Press the [◷ MENU] button ⑫ so that "TIMER MONITOR" is indicated on the screen (at 8).
3. Press the [◷ ON/OFF (DAY)] button ⑨ as necessary to select the day you wish to view (at 3).
4. Press the ▽ or △ OPERATION buttons (⑦ or ⑧) as necessary to change the timer operation shown on the display (at 9).
   * Each press will advance to the next timer operation, in order of time setting.
5. To close the monitor and return to the standard control screen, press the BACK button ②.

<To Turn Off the Weekly Timer>

Press the [◷ ON/OFF] button ⑨ so that "Timer Off" indication appears at 10.

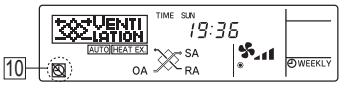

<To Turn On the Weekly Timer>

Press the [◷ ON/OFF] button ⑨ so that the "Timer Off" indication (at 10) goes dark.

② **Using the Simple Timer**

■ You can set the simple timer in any of three ways.
- Start time only: The Lossnay unit starts when the set time has elapsed.
- Stop time only: The Lossnay unit stops when the set time has elapsed.
- Start & stop times: The Lossnay unit starts and stops at the respective elapsed times.

■ The simple timer (start and stop) can be set only once within a 72 hours period. The time setting is made in hour increments.

■ When a 24-hour Ventilation setting is specified (Extra low operation set by pressing the [⏻ ON/OFF] button while running), when the timer expires the system will go to Extra low operation instead of stopping.

Note:
*1. Weekly Timer/Simple Timer cannot be used at the same time.
*2. The simple timer will not operate when any of the following conditions is in effect. The timer is off; the user is in the process of selecting a function; the user is in the process of setting the timer; the system is under central control. (Under these conditions, On/Off operation is prohibited.)
*3. When using a simple timer, the time will not be displayed on the screen, even if the clock use setting is ON (use clock).

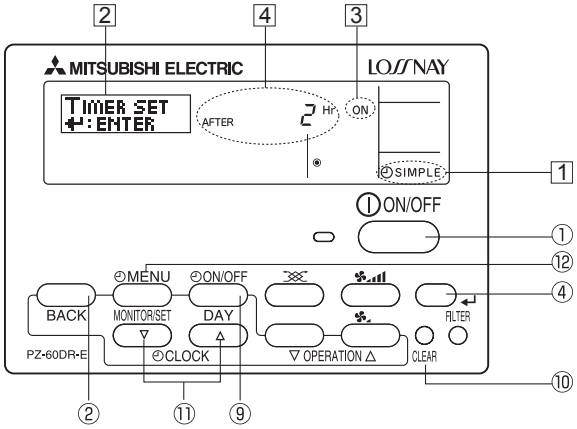

<How to Set the Simple Timer>

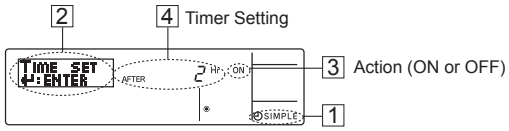

1. Be sure that you are at a standard control screen, and that the simple timer indicator is visible in the display (at 1).
   When something other than the Simple Timer is displayed, set it to SIMPLE TIMER using the function selection of remote controller, refer to section "Installation Manual" [5. Function selection [3] Mode selection (2) Timer function setting].
2. Press the [◷ MENU] button ⑫, so that the "TIMER SET" appears on the screen (at 2). (Note that each press of the button toggles the display between "TIMER SET" and "TIMER MONITOR".)
3. Press the [⏻ ON/OFF] button ① to display the current ON or OFF simple timer setting. Press the button once to display the time remaining to ON, and then again to display the time remaining to OFF. (The ON/OFF indication appears at 3).
   - "ON" timer: The Lossnay unit will start operation when the specified number of hours has elapsed.
   - "OFF" timer: The Lossnay unit will stop operation when the specified number of hours has elapsed.
4. With "ON" or "OFF" showing at 3: Press the appropriate [◷ CLOCK] button ⑪ as necessary to set the hours to ON (if "ON" is displayed) or the hours to OFF (if "OFF" is displayed) at 4.
   - Available Range: 1 to 72 hours
   - Pressing and holding the button will fast-forward the display.
5. To set both the ON and OFF times, repeat Steps 3 and 4.
   * Note that ON and OFF times cannot be set to the same value.
6. To clear the current ON or OFF setting: Display the ON or OFF setting (see step 3) and then press the CLEAR button ⑩ so that the time setting clears to "—" at 4. (If you want to use only an ON setting or only an OFF setting, be sure that the setting you do not wish to use is shown as "—".)
7. After completing steps 3 to 6 above, press the ↵ button ④ to lock in the value.
   * "TIMER SET" indicator flashes three times.

Note:
Your new settings will be cancelled if you press the BACK button ② before pressing the ↵ button ④.

8. Press the BACK button ② to return to the standard control screen.
9. Press the [◷ ON/OFF] button ⑨ to start the timer countdown. When the timer is running, the timer value is visible on the display. **Be sure that the timer value is visible and appropriate.**

<Viewing the Current Simple Timer Settings>

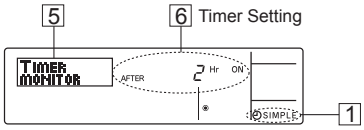

1. Be sure that the simple timer indicator is visible on the screen (at 1).
2. Press the [◷ MENU] button ⑫ so that the "TIMER MONITOR" appears on the screen (at 5).
   - If the ON or OFF simple timer is running, the current timer value will appear at 6.
   - If ON and OFF values have both been set, the two values appear alternately.
3. Press the BACK button ② to close the monitor display and return to the standard control screen.

<To Turn Off the Simple Timer>

Press the [◷ ON/OFF] button ⑨ so that the timer setting no longer appears on the screen (at 7).

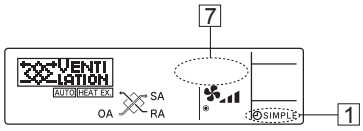

<To Turn On the Simple Timer>

Press the [◷ ON/OFF] button ⑨ so that the timer setting becomes visible at 7.

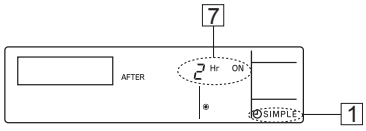

Examples

If ON and OFF times have both been set at the simple timer, operation and display are as indicated below.

Example 1:

Start the timer, with ON time set sooner than OFF time
ON Setting: 3 hours
OFF Setting: 7 hours

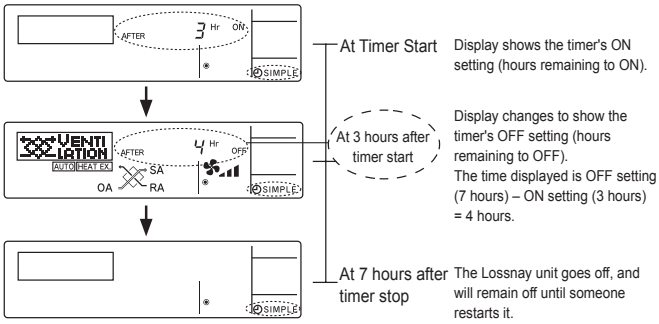

Example 2:

Start the timer, with OFF time is sooner than ON time
ON Setting: 5 hours
OFF Setting: 2 hours

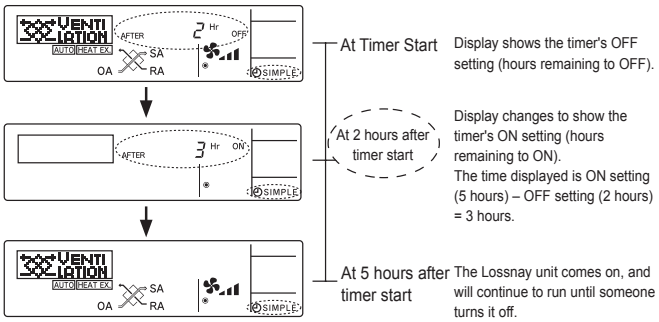

Using the Night Purge

Night purge operation is used in the summer to automatically ventilate a room at night while the air conditioner is stopped, to discharge accumulated heat and thereby reduce the air conditioning load the next morning.
If Night purge is enabled per the "Installation Manual" [5. Function Selection [5] (8)], night purge operation will be performed based on the flowchart shown at right.

From 1:00 A.M. to 6:00 A.M, "Night Purge" indicator is shown on the screen (at 1).

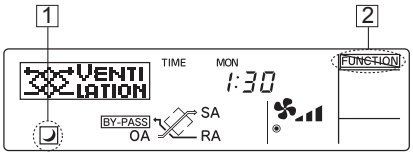

- The fan speed will revert to the last setting before the Lossnay unit was stopped.
- Night purge operation is terminated in any of the following conditions (① to ④), and is not resumed until the start conditions of the next day are reached.

① Between 6:00 and 0:59
② When the operation is stopped between 1:00 and 6:00 with a deluxe remote controller or system controller
③ When the operation is switched on or off between 1:00 and 6:00 by a scheduled timer (Weekly timer)
④ When the operation is switched on or off between 1:00 and 6:00 by an air conditioner, an external control input or a remote input

Note:
- Night purge can be performed when the clock use setting is ON (use clock) in Function Selection.
- The Function Selector cannot be switched during Night purge operation.("Locked" 2 will blink.)
- Night Purge cannot be used with the Simple timer.
- Night purge settings can be checked in the Function Selection mode.
- When more than one Lossnay units are running, the temperature is measured by the main Lossnay.
- Night purge is not performed when "CENTRAL" is displayed.
- Do not use the night purge function if fog or heavy rain is expected. Rain water may enter the unit during the night.

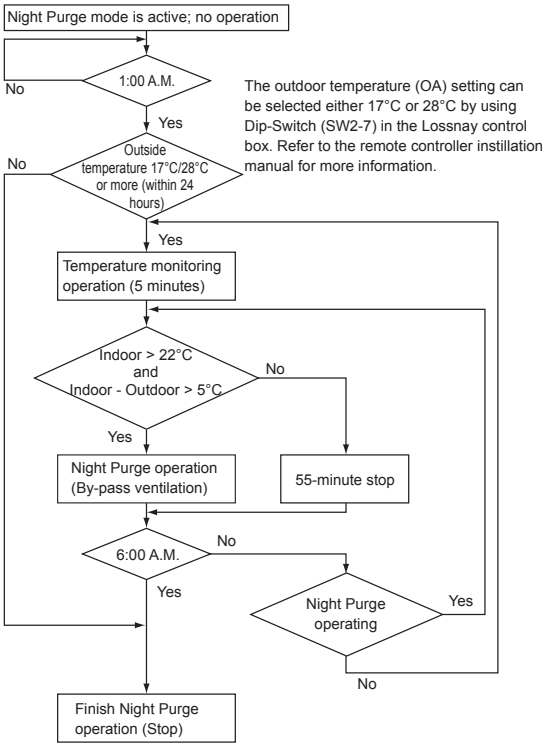

Using the operation lock

Locking the remote controller buttons (Operation Lock)

■ If you wish, you can lock the remote controller buttons. You can use the Function Selection of remote controller to select which type of lock to use. (For information about selecting the lock type, see section "Installation Manual" [5. Function Selection [2] (1)]
Specifically, you can use either of the following two lock types.

① Lock All buttons: Locks all of the buttons on the remote controller.
② Lock All Except [ON/OFF] button: Locks all buttons other than the [ON/OFF] button.

Note:
The "Locked" indicator appears on the screen to indicate that buttons are currently locked.
"Locked" will be displayed when operation is locked via Function Selection.
In addition,"Locked" will be displayed during Night purge, external fan speed adjustment input (automatic fan speed), fan speed and function selector adjustment input, Function Selection mode when using two remote controllers, and also in maintenance mode.

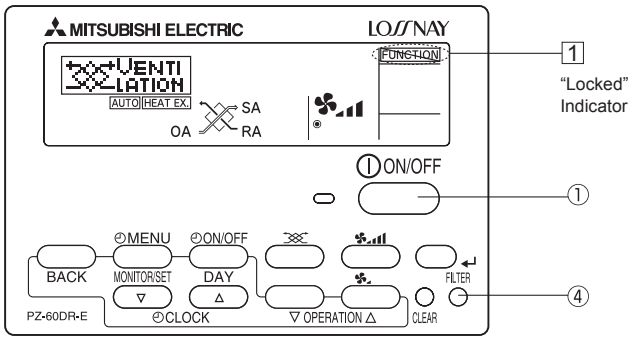

<How to Lock the buttons>

1. While holding down the FILTER button ④, press and hold down the [ON/OFF] button ① for 2 seconds.The "Locked" indication appears on the screen (at 1), indicating that the lock is now engaged.
   * If locking has been disabled in Function Selection of remote controller, the screen will display the "NOT AVAILABLE" message when you press the buttons as described above.

• If you press a locked button, the “Locked” indication (at 1) will blink on the display.

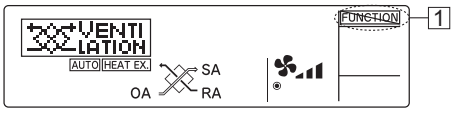

<How to Unlock the buttons>

1. While holding down the FILTER button ④, press and hold down the [ⓘ ON/OFF] button ① for 2 seconds—so that the “Locked” indication disappears from the screen (at 1).

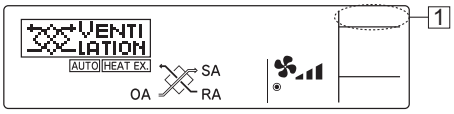

Centrally Controlled

“CENTRAL” will be displayed when operation is locked in the centralized controller or REMOTE is ON in Remote Input, and also during the external interlocking priority mode (during interlocking, when the interlocking mode is “External Signal Priority.”)
The following operations are locked:

• Clear Filter (only when the operation is prohibited by the centralized controller)
• ON/OFF (including timer operation)

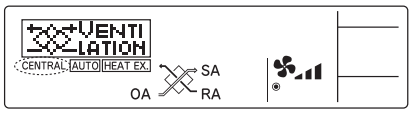

Note:
May also be individually restricted.

When interlocked with external device

The Lossnay unit can be started and stopped by external equipment.

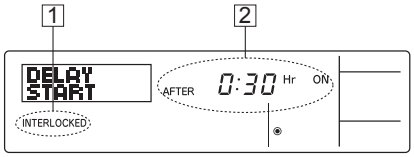

When the operation of Lossnay unit is started by external device,“INTERLOCKED” 1 is displayed on the remote controller display
Timer mode is cancelled when the Lossnay unit is started by external device while the operation start timer has been set, or when the Lossnay unit is stopped by external device while the operation stop timer has been set.

• External device interlocking is given priority over timer setting.

If delayed operation is set for the Lossnay unit, the interlocking start time will be “After 0:30 hours” 2. (Operation will start after 30 minutes, and thereafter the time display will decrement each minute.)

To set Ventilation mode, Fan Speed Selection, Timer Operation Lock

Settings are the same as for a single Lossnay unit. (see page C-79.)

12.4 Care and Maintenance

	Button	Display	Sequence
Cleaning of the Lossnay unit's filter* (i.e., resetting the total Lossnay-unit operating time)	FILTER	CLEANING FILTER	Clean the air filter, Press the FILTER button twice and confirm that the “FILTER” “CLEANING” display turns off. (Displayed after every 3,000 hours of cumulative operation time.)
Cleaning the Lossnay core*	FILTER	CLEANING CORE	Clean the Lossnay core, Press the FILTER button twice and confirm that the“CORE” “CLEANING” display turns off. (Displayed after every 6,000 hours of cumulative Lossnay ventilation time.)
Cleaning the remote controller	To remove dirt from the remote controller’s display window, Use a mild detergent on slightly damp cloth, wipe with a dry cloth to remove any detergent residue. • Paint thinner, alcohol, benzene, gasoline, kerosene, spray cleaner, cleaning alkali, etc.		

● Clean, check and replace according to the Operation Manual provided with the Lossnay unit.
* Factory default setting is for no remote controller.

12.5 Servicing

<Flashing Error Codes>

Basic System

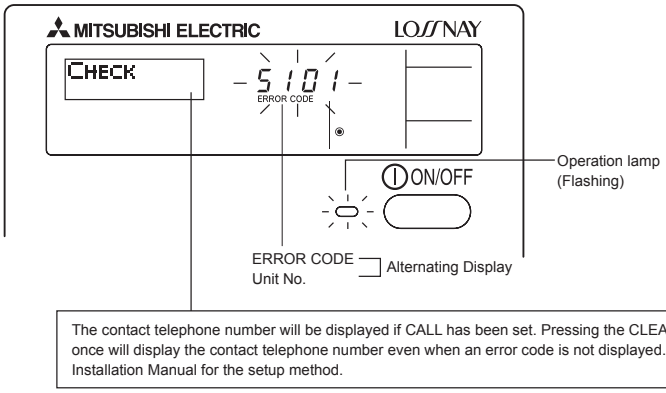

M-NET System

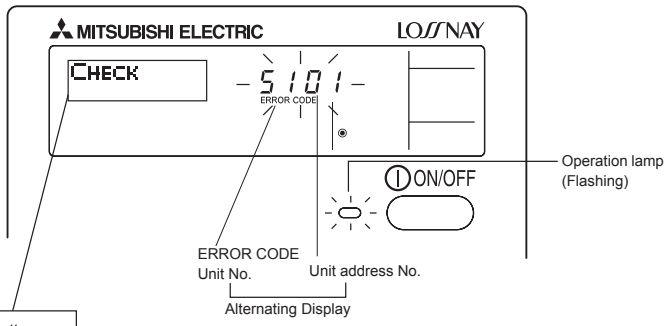

The contact telephone number will be displayed if CALL has been set. Pressing the CLEAR button once will display the contact telephone number even when an error code is not displayed. See the Installation Manual for the setup method.

● If the Operation lamp and error code are both flashing: This means that the Lossnay unit is out of order and operation has been stopped (and cannot resume). Take note of the indicated unit number and error code, then switch off the power to the Lossnay unit and call your dealer or servicer.

12.6 How to Install

1. **Choose a place in which to install the remote controller (switch box).**
   Be sure to observe the following steps:
   (1) When installing on either the switch box or the wall, allow extra space around the remote controller as shown in the figure at the right.
   (2) Parts which must be supplied on site.
   - Switch box for two units
   - Thin-copper wiring pipe
   - Lock nut and bushing
   - Surface raceways

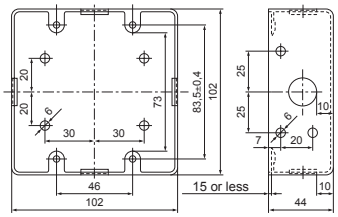

Switch box two units

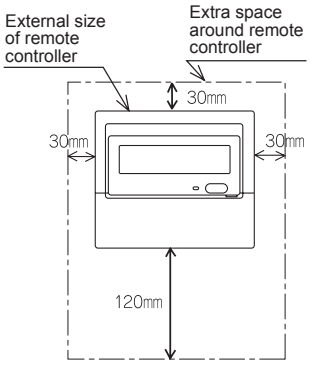

Construction precautions
- Do not connect a wire exceeding the specified thickness to the terminal block. (This can lead to damage.)
- Do not run together with other wiring in a wiring conduit. (This can cause communication errors.)
- Do not connect multiple communication lines using a single multicore cable. (This can cause communication errors.)
- The total length of the communication line must be 500 m or less. (This can cause communication errors.)

2. **Seal the remote controller cord with putty in order to prevent the possible entry of dew, water droplets, cockroaches, other insects, etc.**

When using the switch box
- When installing on the switch box, seal the connections between the switch box and wiring pipe with putty.

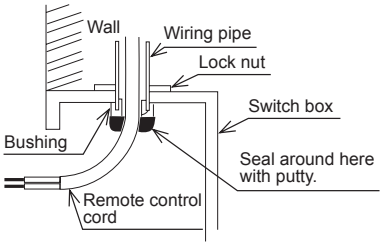

When installing directly on the wall
- When opening a hole using a drill for the remote controller cord (or when taking the cord out of the back of the remote controller), seal the hole with putty.
- When routing the cord via the portion cut off from the upper cover, similarly seal that portion with putty.
- When taking the remote controller cord from back of the controller, use surface raceways.

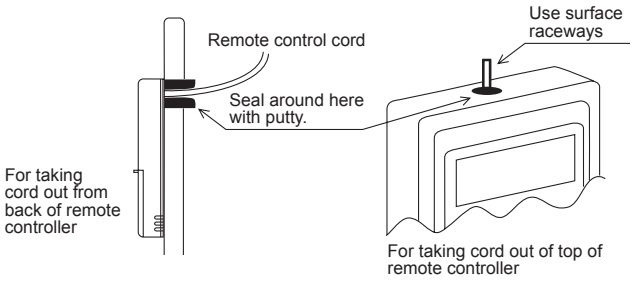

3. **Remove the remote controller cover.**
   - Insert a flathead screwdriver into one of the open slots and move the screwdriver in the arrow direction.

⚠ CAUTION	• Remove the cover carefully so as to avoid any damage. • Do not turn the screwdriver in the slot. Doing so may damage the slot.

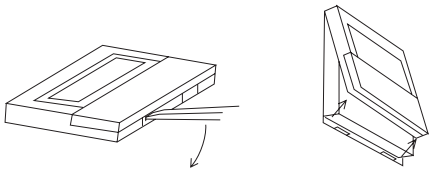

4. **Install the lower case on the switch box or directly on the wall.**

When using the switch box

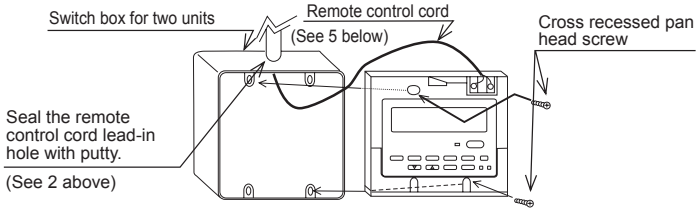

When installing directly on the wall

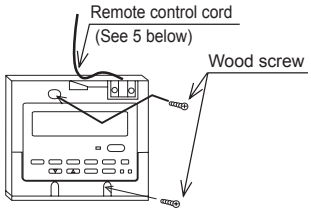

⚠ CAUTION	Do not tighten the screws too tight. Doing so may deform or crack the lower cover.

NOTE:
- Choose a flat plane for installation.
- Fasten the switch box at more than two places when installing directly on the wall.
- When reinstalling on the wall, fasten securely using anchors.

5. **Connect the remote control cord to the remote controller terminal block.**
   For the remote control, obtain a 2-core cable between 0.3 and 1.25 mm² at the site.

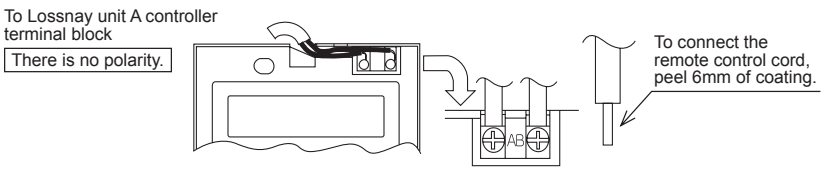

⚠ CAUTION	Do not use crimp terminals to connect to remote controller terminal blocks. The terminals may contact the board and cause trouble or contact the cover and damage the cover.
⚠ CAUTION	Prevent remote cord chips from getting into the remote controller. Electric shock or malfunction may result.

6. **Wiring hole for installing directly on the wall (or open wiring)**
   - Cut off the shaded area from the upper cover using a knife, nippers, etc.
   - Take out the remote control cord connected to the terminal block via this portion.

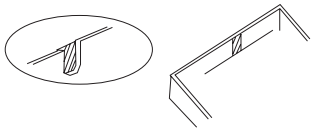

7. **Install the cover to the remote controller.**

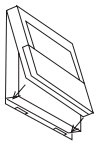

First, hook the cover to the two upper claws and then fit it to the remote controller.

⚠ CAUTION	Press the cover until it snaps shut. If not, it may fall off.

NOTE: A protection sheet is stuck to the operation section. Peel off this protection sheet before use.

12.7 Test Run

Operation	Relevant button	Relevant display items	Sequence
1. Starting the Lossnay unit	ON/OFF Operation lamp	"High"	Press the [ON/OFF] button and confirm that the Operation lamp turns on.
2. Setting the ventilation mode		HEAT EX. "HEAT EX." non-automatic	Press the Function selector button: Each time it is pressed, the corresponding display will change in accordance with the sequence [HEAT EX.] (non-automatic) --> [BY-PASS] (non-automatic) --> [AUTO].
3. Selecting the fan speed		"Low" "Extra High"	Press the Fan Speed Adjustment button to select either Low or High (Extra High) fan speed. High and Extra-High can be selectable by initial setting.
4. Selecting the Extra Low fan speed*1*2		"Extra Low"	Press the "Extra Low" fan speed button. Extra low operation will begin. Pressing the Fan Speed Adjustment button will cause the fan speed to revert to its original speed (before the Extra low mode began). Pressing the Extra Low fan speed button again will return operation to Extra low mode.
5. Stopping the Lossnay unit	ON/OFF Operation lamp		Press the [ON/OFF] button.*2 (Press the [ON/OFF] button to turn off the Operation lamp.)

*1 If you press a button for a feature that is not installed at the Lossnay unit, the remote controller will display the "NOT AVAILABLE" message.
*2 If set to "24-hour Ventilation", pressing the [ON/OFF] button will cause this to be displayed in the dot display "24HR VENTILATION", and the operation will switch to Extra low fan speed mode. To stop operation, press the [ON/OFF] button twice within 3 seconds, or press and hold the [ON/OFF] button for 5 seconds.

If error code is displayed, refer to the following table.

Error code	Cause	Action
0900	The SW2 trial-operation switch from the Lossnay controll box is On.	Turn off the trial-operation switch.
6608	If two or more Lossnay units are used together, "6608" may indicate that the correct setting has not been performed using the main/sub switches.	Turn off the power supply and use the main/sub switches to specify one Lossnay unit as the main and the others as sub. Turn the power supply back on. Note that all Lossnay units are specified as main before shipment from the manufacturing plant.
	If two remote controllers are used together, "6608" may indicate that one of the controllers is not connected.	Turn off the power supply, connect the remote controller, then turn the power supply back on.
	If two remote controllers are used together, "6608" may indicate that both of these controllers are not set automatically when the power is turned on.	Turn off the power supply, then turn it back on.
	Multiple transmission cables are wired with multi core cables.	For the applied transmission cable, wire the transmission cables away from the other transmission cable.
	Communication error (M-NET side)	Turn off the power supply and contact the distributor.
4116	A circuit error has occurred in the Lossnay unit.	
3126	Temperature error (OA side).	
5101	An error has occurred in the Lossnay thermistor (OA side).	
5102	An error has occurred in the Lossnay thermistor (RA side).	
3602	An error has occurred in the damper motor.	
6600	Multiple address error (M-NET side)	
6602 6603 6606 6607	Communication error (M-NET side)	

12.8 Function Selection

Function selection of remote controller

The setting of the following remote controller functions can be changed using the remote controller function selection mode. Change the setting when needed.

Item 1	Item 2		Item 3 (Setting content)
[1] Change Language (“CHANGE LANGUAGE”)	Language setting to display		Display in multiple languages is possible.
[2] Function limit (“FUNCTION SELECTION”)	(1) Operation function limit setting (operation lock) (“LOCKING FUNCTION”)		Setting the range of operation limit (operation lock)
	(2) 24-hour ventilation setting*2*6 (“24HR VENTILATION”)		Sets whether the [① ON/OFF] button stops operation completely or initiates Extra low operation.
[3] Mode selection (“MODE SELECTION”)	(1) Use of clock setting*3 (“CLOCK”)		Setting the use or non-use of clock function
	(2) Timer function setting (“WEEKLY TIMER”)		Setting the timer type
	(3) Contact number setting for error situation (“CALL.”)		Contact number display in case of error Setting the telephone number
[4] Display change (“DISP MODE SETTING”)	(1) Filter cleaning setting (“MAINTENANCE SIGN”)	(SW5-5)*5	Set the schedule for “FILTER” indicator to appear after 3000-hour use, or no indication
	(2) Lossnay cores cleaning setting (“MAINTENANCE SIGN”)	_____	Set the schedule for “CORE” indicator to appear after 6000-hour use, or no indication
	(3) SA (Supply Air) Temperature display setting (“TEMPERATURE DISP”)	_____	Sets whether the SA (Supply Air) Temperature (Calculated value) display or not.
	(4) OA (Outdoor Air) Temperature display setting (“TEMPERATURE DISP”)	_____	Sets whether the OA (Outdoor Air) Temperature (measured at the sensor in the LOSSNAY unit) display or not.
	(5) RA (Room Air) Temperature display setting (“TEMPERATURE DISP”)	_____	Sets whether the RA (Room Air) Temperature (measured at the sensor in the LOSSNAY unit) display or not.
	(6) Temperature cxchange efficiency setting (“EXCHANGE EFFICIENCY”)	_____	Sets whether the temperature exchange efficiency.
[5] Installation settings*1 *2 (“LOSSNAY FUNCTION”)	(1) Supply fan speed setting (“SA SETTING”)	(SW2-4,9)*5	Sets Extra High/High fan speed selection , and Multi Ventilation modes
	(2) Exhaust fan speed setting (“EA SETTING”)	(SW2-5,10)*5	Sets Extra High/High fan speed selection , and Multi Ventilation modes
	(3) Power supply/exhaust when operation starts (“POWER VENT START”)	(SW2-3)*5	Switching to power supply/exhaust when operation starts
	(4) Subordinate Lossnay settings*4 (“SUB SET”)	_____	Enable/disable subordinate Lossnay unit supply and exhaust fan speed settings.
	(5) Power supply ON/OFF/AUTO (“RECOVERY SETTING”)	(SW2-6)*5 (SW5-4)*5	Controls stop and start operation by turning the power supply (220-240 V) for the Lossnay on and off.
	(6) Operation monitor output selection (“OPERATION MONITOR”)	(SW5-2)*5	Sets whether the operation monitor will apply to the exhaust fan or the supply fan.
	(7) Exhaust fan speed selection for cold region intermittent operation (“EA SETTING INTERMIT”)	(SW5-9)*5	Sets exhaust fan speed for cold region intermittent operation.
	(8) Night purge setting*3 (“NIGHT PURGE”)	_____	Enables/disables Night purge.
	(9) Bypass automatic ventilation priority setting (“BYPASS SETTING”)	(SW2-7)*5	Selects the auto ventilation adjustment (AUTO) pattern.
[6] Interlocking settings*1 *2 (“INTERLOCK SETTING”)	(1) Interlock mode setting (“INTERLOCK MODE”)	(SW5-7,8)*5	These settings indicate how Lossnay should operate when external devices are started or stopped.
	(2) Pulse input setting (“INPUT SIGNAL”)	(SW2-2)*5	Set when pulse signal equipment is connected to an external input.
	(3) Delayed operation settings (“DELAY OPERATION”)	(SW5-1)*5	Setting for delay (of operation at startup of heating or cooling)
	(4) Exhaust operation settings for air conditioner defrosting (“EA SETTING DEFROST”)	(SW5-3)*5	Stopping exhaust fan when defrosting air conditioner

[5] Installation settings and [6] Interlocking settings are selection modes that allow overriding of Lossnay unit Dip switches settings via remote controllers.

*1 When a remote controller is set to factory setting, the system operates according to the main unit Dip switch settings. When the remote controller settings are changed from the defaults, the system operates according to those settings. (The main unit switch settings are overridden.)

*2 If two remote controllers are used, these settings can be performed only for the “main” remote controller. These settings will be skipped for the “sub” remote controller and may not be modified. The designation of main and sub remote controller and are determined automatically upon main unit power-up. The remote controller for which [5] and [6] are displayed in the Function Selection mode is the main remote controller.

*3 Clock use must be set for Weekly timer and Night purge operation.

*4 Applies only to the following functions:
[Supply fan], [Exhaust fan], [Start up power supply and exhaust]

*5 Indicates Dip switches in the Lossnay control box.

*6 For the Lossnay models without those functions, those setting items will be nondisplay.

NOTE

When the functions of the Lossnay unit were changed by function selection after installation, always indicate the set contents by entering ○ or other mark in the appropriate check field of the tables shown in page 7 and 8. (Settings may be lost if the remote controller malfunctions.)
When replacing a remote controller, specify the same settings as before the replacement.

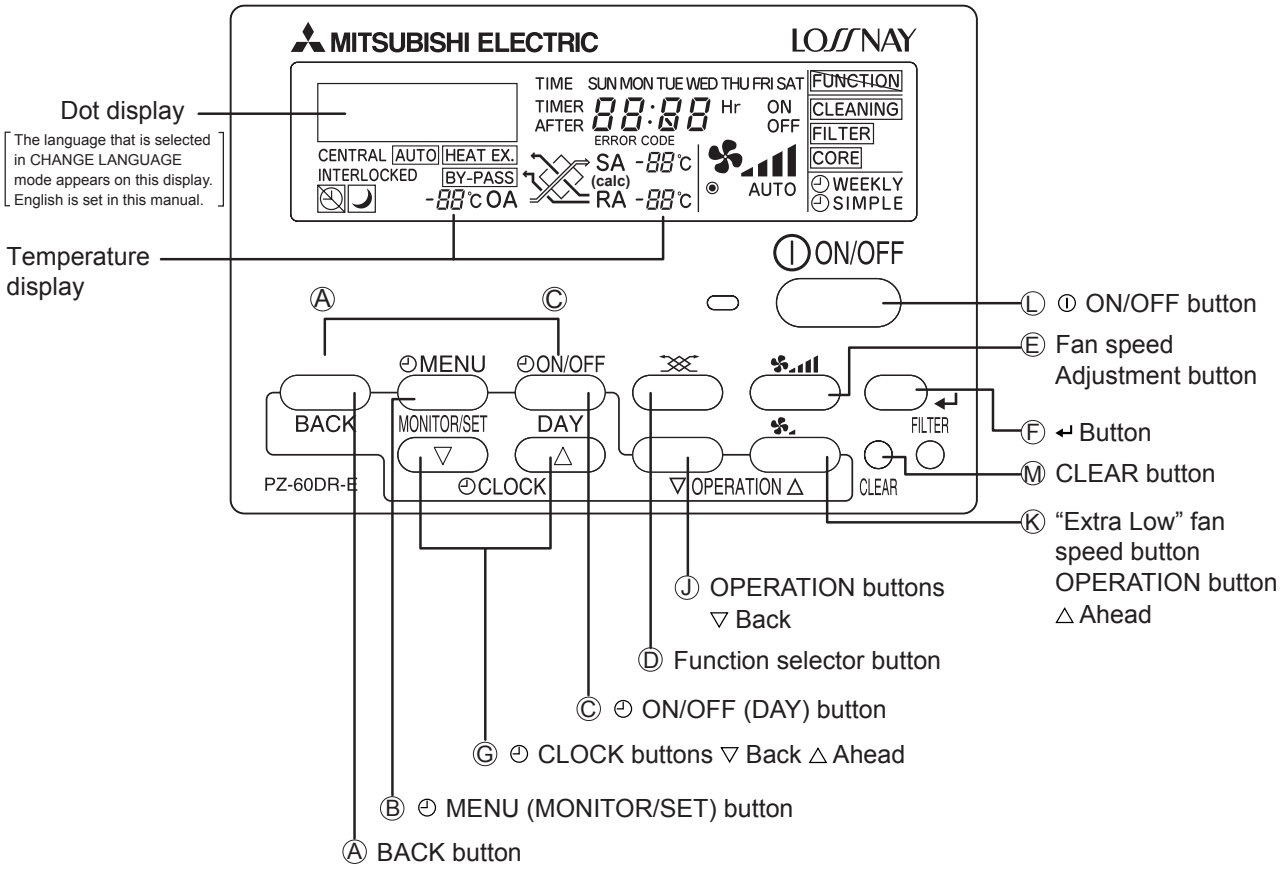

[Function selection flowchart]

[1] Normal display
(Display when the Lossnay unit is not running)

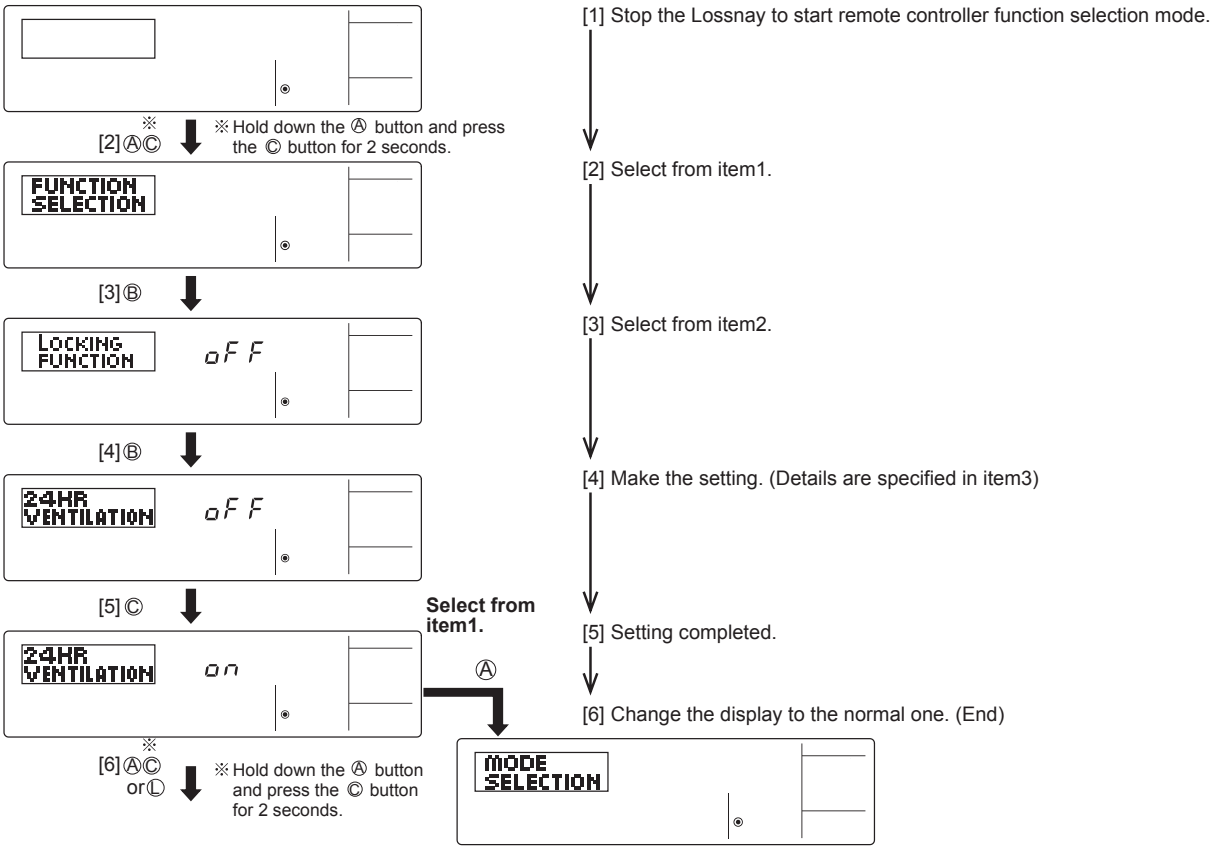

- If the remote controller Function Selection mode is entered during timer operation, the timer operation will be cancelled. Set timer operation after completing the remote controller Function Selection mode.
- When using two remote controllers, if one remote controller is set to remote controller Function Selection mode, "FUNCTION" will be displayed in the other remote controller and its operation will be disabled.
- Button response may at times be slow due to communication processing; this is not a malfunction.

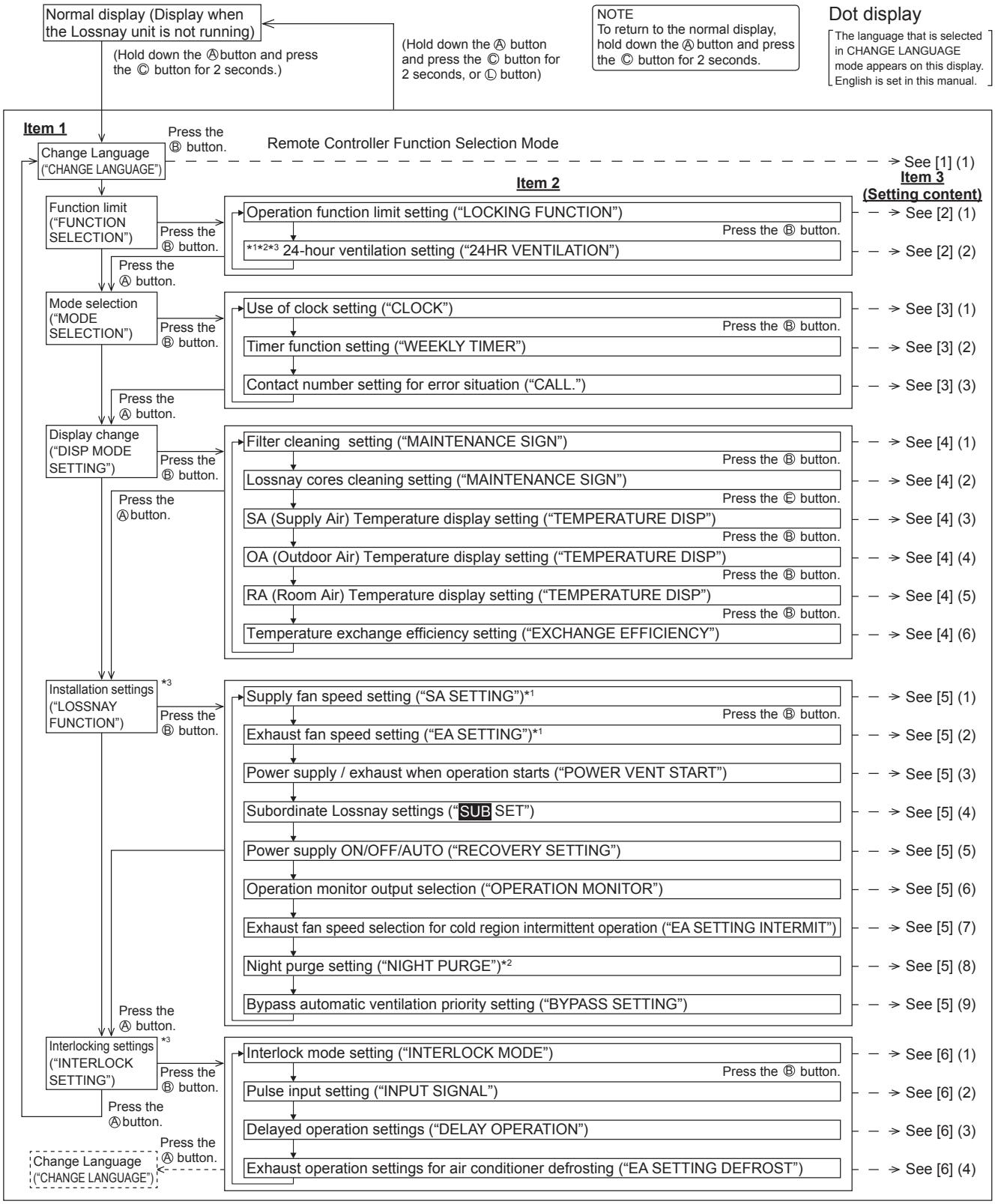

*1 For the Lossnay models without those functions, those setting items will be nondisplay.
*2 Those settings can be disabled depending on the other setting conditions.
*3 When two remote controllers are used, the settings will be displayed only in the main remote controller.

[1] Change Language

The language that appears on the dot display can be selected.
• Press the [◴ MENU] button to change the language.
Japanese (ニホンゴ) (ja), English (en), German (de), Spanish (es), Russian (ru), Italian (it), Chinese (zh), French (fr)

[2] Function limit

(1) Operation function limit setting (operation lock)
To switch the setting, press the [◴ ON/OFF] button.

Dot display	Display	Function	Check
LOCKING FUNCTION	oFF	Operation lock setting is not made. (Factory setting)	
	no1	Operation lock setting is made on all buttons other than the [ⓘ ON/OFF] button.	
	no2	Operation lock setting is made on all buttons.	

* To make the operation lock setting valid on the normal screen, it is necessary to press buttons (Press and hold down the FILTER and [◴ ON/OFF] buttons at the same time for 2 seconds.) on the normal display after the above setting is made.
* The same operation is used to cancel the lock.

(2) 24-hour ventilation setting
Sets whether to stop operation completely or initiate Extra low operation by pressing the [ⓘ ON/OFF] button during operation. 24-hour Ventilation cannot be set when the pulse input setting is ON in the interlocking settings.
To switch the setting, press the [◴ ON/OFF] button.

Dot display	Display	Function	Check
24HR VENTILATION	oFF	Pressing the [ⓘ ON/OFF] button during operation stops operation. (Factory setting)	
	on	Pressing the [ⓘ ON/OFF] button during operation initiates Extra low operation. Pressing the [ⓘ ON/OFF] button twice within three seconds, or pressing and holding it for five seconds, stops operation.	

* When 24-hour Ventilation is set to on, "24HR VENTILATION" will be displayed in the dot display during Extra low operation. The supply fan will stop and the exhaust fan will perform low notch operation if the system enters cold region intermittent mode during 24 hours operation.
* For the Lossnay models without those functions, those setting items will be nondisplay.

[3] Mode selection

(1) Use of clock setting
To switch the setting, press the [◴ ON/OFF] button.

Dot display	Display	Function	Check
CLOCK	oFF	The clock function cannot be used.	
	on	The clock function can be used. (Factory setting)	

* Set to ON to enable Weekly timer and Night purge.

(2) Timer function setting
Selects whether to use a Weekly timer, Simple timer, or not to use any timer.
To switch the setting, press the [◴ ON/OFF] button.

Dot display	Function	Check
WEEKLY TIMER	The weekly timer can be used. (Factory setting) When the use of clock setting is OFF, the "WEEKLY TIMER" cannot be used.	
SIMPLE TIMER	The simple timer can be used.	
TIMER MODE OFF	The timer mode cannot be used.	

(3) Contact number setting for error situation
To switch the setting, press the [◴ ON/OFF] button.

Dot display	Function	Check
CALL OFF	The set contact numbers are not displayed in case of error. (Factory setting)	
CALL 0120 XXXXXXXX	The set contact numbers are displayed in case of error.	

* Setting the contact numbers
To set the contact numbers, follow the following procedures.
Move the flashing cursor to set numbers. Press the OPERATION buttons to move the cursor to the right (left). Press the [◴ CLOCK] buttons to set the numbers.
Pressing the CLEAR button will clear the set number.

[4] Display change

(1) Filter cleaning setting (SW5-5)
Set to OFF to disable Filter maintenance display.
To switch the setting, press the [◴ ON/OFF] button.

Dot display	Display	Other indicators	Function	Check
MAINTENAN-SE SIGN	on	CLEANING FILTER	With maintenance sign (cumulative operation time : 3000 hours)*	
	oFF	CLEANING FILTER	No maintenance sign (Factory setting)	

* For Extra low fan speed, half of the actual operation time is added to the normal cumulative time.

(2) Lossnay cores cleaning setting
Set to on to enable Lossnay core maintenance display.
To switch the setting, press the [◴ ON/OFF] button.

Dot display	Display	Other indicators	Function	Check
MAINTENAN-SE SIGN	on	CLEANING CORE	With maintenance sign (cumulative operation time: 6000 hours)*	
	oFF	CLEANING CORE	No maintenance sign (Factory setting)	

* For Extra low fan speed, half of the actual operation time is added to the normal cumulative time.

(3) SA Temperature Display Setting
Set whether or not to display the SA temperature. Press the [◴ ON/OFF] button to switch between the following settings.

Dot display	Display	Other indicators	Function	Check
TEMPERA-TURE DISP	on	SA	Temperature displayed (factory setting)	
	oFF	SA	Temperature not displayed	

* The indicated temperature is the value of the Lossnay set as the main unit.
* During By-pass operation, the SA temperature is not indicated even if display is set to on.

(4) OA Temperature Display Setting
Set whether or not to display the OA temperature. Press the [◴ ON/OFF] button to switch between the following settings.

Dot display	Display	Other indicators	Function	Check
TEMPERA-TURE DISP	on	OA	Temperature displayed (factory setting)	
	oFF	OA	Temperature not displayed	

* The indicated temperature is the measured OA intake temperature in the Lossnay unit set as the main unit. The indicated OA temperature may differ from the actual OA temperature.

(5) RA Temperature Display Setting
Set whether or not to display the RA temperature. Press the [◴ ON/OFF] button to switch between the following settings.

Dot display	Display	Other indicators	Function	Check
TEMPERA-TURE DISP	on	RA	Temperature displayed (factory setting)	
	oFF	RA	Temperature not displayed	

* The indicated temperature is the measured RA intake temperature in the Lossnay unit set as the main unit. The indicated RA temperature may differ from the actual RA temperature.
* During By-pass operation, the RA temperature is not indicated even if display is set to on.

(6) Exchange Efficiency Correction
Correct the exchange efficiency for calculating the SA temperature (calculated value). Use the [Ⓖ CLOCK buttons ▽ Back] to chage the value by -1%, and use the [Ⓖ CLOCK buttons △ Ahead] to change the value by +1%.
* Setting range: 30 to 99%

Dot display	Display	Function	Check
EXCHANGE EFFICIENCY	30~99	Factory setting: 70(%)	

[5] How to Display the Temperature

Each press of the Return button switches between the display and non-display of the OA/RA inlet temperature*1 and heat-exchanged SA temperature (calculated value)*2 . (the temperature is not displayed when the temperature display setting is seto to OFF.)

Ventilation - tilstande	Operation Section	Display(example)
HEAT EX.	BACK	HEAT EX. 10℃OA SA 21℃ (calc) RA 25℃
BY-PASS	BACK	BY-PASS 18℃OA SA RA

*1 The temperatures displayed on the remote controller are the temperatures detected at the inlet port of the product main unit, and may differ from the actual OA temperature and RA temperature.

*2 The calculated value for standard exchange efficiency is displayed, so the indicated temperature may differ from the actual SA temperature. If you want to display a value that is closer to the actual temperature, perform exchange efficiency correction.
•During By-pass operation, the temperature is not displayed for the RA and SA (calculated value).

Note:
If a temperature display setting is set to OFF (not displayed) in the switch display settings of the remote controller function selector, the temperature for that location is not displayed.
•If the temperature sensor detection temperature becomes 40°C or more or -10°C or less, the indications for both RA and OA become "- -", and the indication for SA also becomes "- -".
•If an error occurs, the correct temperature may not be displayed.

[5] Installation settings

(1) Supply fan speed setting (SW2-4,9)
Set supply to Extra High/High fan speed notch selection or Low fixed (multi ventilation mode).
To switch the setting, press the [◷ ON/OFF] button.

Dot display	Display	Function	Check
SA SETTING	SH : L	Used at "Extra High" and "Low" fan speed	
	H : L	Used at "High" and "Low" fan speed (Factory setting)	
	L	Fixed at "Low" fan speed (multi ventilation mode)	

(2) Exhaust fan speed setting (SW2-5,10)
Set exhaust to Extra High/High fan speed notch selection or Low fixed (multi ventilation mode).
To switch the setting, press the [◷ ON/OFF] button.

Dot display	Display	Function	Check
EA SETTING	SH : L	Used at "Extra High" and "Low" fan speed	
	H : L	Used at "High" and "Low" fan speed (Factory setting)	
	L	Fixed at "Low" fan speed (multi ventilation mode)	

(3) Power supply / exhaust when operation starts (SW2-3)
Set whether or not to perform power exhaust (30 minutes of fixed High (Extra High) fan speed) at start-up. When set to 24-hour Ventilation, pressing the [⏻ ON/OFF] button stops and re-starts operation.
To switch the setting, press the [◷ ON/OFF] button.

Dot display	Display	Function	Check
POWER VENT START	oFF	Normal (Factory setting)	
	on	Power supply / exhaust is performed at start-up (After 30 minutes, the system switches to enable fan speed adjustment from the remote controller)	

* If power supply / exhaust is performed at start-up, the notch can be changed with the Fan speed Adjustment button.

(4) Subordinate Lossnay settings
Enables/disables usage of the supply and exhaust fan speed [[5] (1) to (3) above] remote controller settings for the subordinate Lossnay. If set to "dIP", only the main Lossnay will operate at the remote controller fan speed settings. The subordinate Lossnay will operate using the main unit Dip switch settings.
To switch the setting, press the [◷ ON/OFF] button.

Dot display	Display	Function	Check
SUB SET	RC	Enables function settings for the subordinate Lossnay via the remote controller. (Factory setting)	
	dIP	Disables function settings for the subordinate Lossnay via the remote controller.	

(5) Power supply ON/OFF/AUTO (SW2-6) (SW5-4)
Controls stop and start operation by turning the power supply (220-240V) for the Lossnay on and off.
To switch the setting, press the [◷ ON/OFF] button.

Dot display	Display	Function	Check
RECOVERY SETTING	oFF	Stop when the power is on (Factory setting)	
	on	Start when the power is on	
	AUΓo	Resume at the same operation mode (stop or start) before power off	

(6) Operation monitor output selection (SW5-2)
Selects whether the operation monitor output will apply to the exhaust fan (duing operation) or the supply fan.
To switch the setting, press the [◷ ON/OFF] button.

Dot display	Display	Function	Check
OPERATION MONITOR	1	Corresponds to opertation mode output exhaust fan (Factory setting)	
	2	Corresponds to operation mode output supply fan	

(7) Exhaust fan speed selection for cold region intermittent operation (SW5-9)
Selects the exhaust fan speed during cold region intermittent operation.
To switch the setting, press the [◷ ON/OFF] button.

Dot display	Display	Function	Check
EA SETTING INTERMIT.	oFF	Exhaust fan stops.	
	Lo	Exhaust fan operates at "Low" (fixed) fan speed.	
	on	Exhaust fan operates normally (with no notch Change). (Factory setting)	

(8) Night purge setting
Night purge operation is used in the summer to automatically ventilate a room at night while the air conditioner is stopped, to discharge accumulated heat and thereby reduce the air conditioning load the next morning. Enables or disables Night purge operation.
To switch the setting, press the [◷ ON/OFF] button.

Dot display	Display	Function	Check
NIGHT PURGE	oFF	Night purge mode is inactive. (Factory setting)	
	on	Night purge mode is active.	

* See page 14 of the Operation Manual for details on Night purge.
* Night purge cannot be used with the Simple timer.

(9) Bypass automatic ventilation priority setting (SW2-7)
Selects the auto ventilation adjustment (AUTO) pattern.
To switch the setting, press the [◷ ON/OFF] button.

Dot display	Display	Function	Check
BYPASS SETTING	1	Normal (Factory setting)*1	
	2	Outdoor air cooling priority mode*2	

*1 When the night purge is set by the remote controller, night purge operation starts at a temperature of 28°C (within 24 hours).
*2 When the night purge is set by the remote controller, night purge operation starts at a temperature of 17°C (within 24 hours).

[6] Interlocking settings

(1) Interlock mode setting (SW5-7,8)
These settings indicate how Lossnay should operate when external devices are started or stopped.
To switch the setting, press the [◷ ON/OFF] button.

Dot display	Display	Function	Check
INTERLOCK MODE	onoF	ON/OFF interlock (Factory setting)	
	on	ON interlock	
	oFF	OFF interlock	
	oUΓ*	External input given priority	

* External input signal priority cannot be set when the pulse input setting is on.

(2) Pulse input setting (SW2-2)
Set as shown when connecting the pulse signal equipment from a building maintenance system to an external input.
To switch the setting, press the [◷ ON/OFF] button.

Dot display	Display	Function	Check
INPUT SIGNAL	oFF	No pulse input (Factory setting)	
	on	Pulse input	

* 24-hour Ventilation cannot be set when the pulse input setting is on.

(3) Delayed operation settings (SW5-1)
Selects whether or not to perform delayed operation when either an air conditioner or external equipment is running.
To switch the setting, press the [◷ ON/OFF] button.

Dot display	Display	Function	Check
DELAY OPERATION	oFF	No operation delay (Factory setting)	
	on	Operation delay of 30 minutes	

* Delayed operation cannot be used when the pulse input setting is on.

(4) Exhaust operation settings for air conditioner defrosting (SW5-3)
Set the operation of the exhaust fan (with the air supply fan is stopped) during Mitsubishi air conditioner defrost mode when the Lossnay unit is connected to the air conditioner with a duct.
To switch the setting, press the [◷ ON/OFF] button.

Dot display	Display	Function	Check
EA SETTING DEFROST	oFF	Stop	
	on	Operation (Factory setting)	

13. Lossnay Remote Controller (PZ-41SLB-E)

Operation

[2CONTROLLERS] Display
Displayed when two Lossnay remote controllers operate the Lossnay unit(s). Note that the most recent operation request from either controller is given priority.

Ventilation Modes
Indicates the ventilation mode status.

Energy recovery (Heat exchange) HEAT EX.

Bypass BY-PASS

Automatic (Heat ex./Bypass) AUTO HEAT EX. or BY-PASS AUTO

Power Display
Displayed while the Lossnay remote controller is on.

[CHECK] Display
Displayed together with the malfunctioning unit (three digits) and an error code (four digits).

Delay time Display
Displays delay time.

Delay setting SETTING
XX MIN.DELAYED (XX:0-60)
During delay operation
XX MIN.DELAYED (XX:1-60)

Ventilation Mode Selector Button
Used to select the ventilation mode from Energy recovery (Heat exchange), Bypass or automatic.

[DELAY START] Button
Sets delay time.

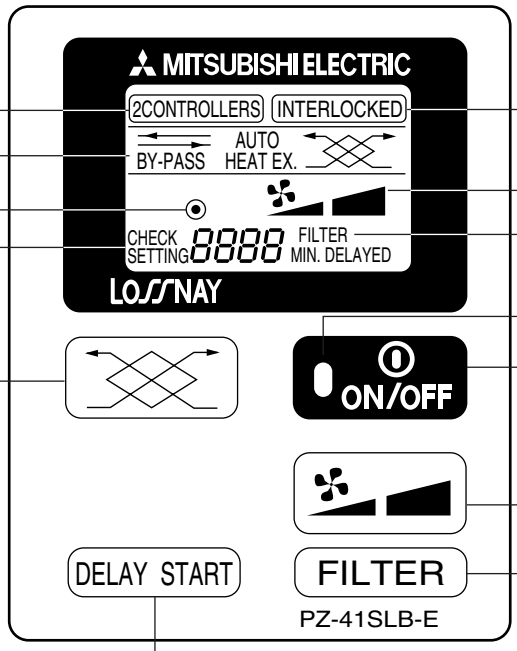

[INTERLOCKED] Display
Displayed when the Lossnay operates via interlocked indoor unit or external signal.

Fan Speed Display
Displays the selected fan speed.

[FILTER] Display
Displayed when the accumulated operating time reaches the time set for air filter maintenance.

Operation lamp
On during operation. Flashes when a malfunction occurs.

[ON/OFF] Button
Switches between run and stop. The lamp on the button stays lit during operation.

Fan Speed Adjustment Button
Used to select the fan speed of either "Low" or "High".

Low → High

[FILTER] Button
Press two times to reset the filter sign display.

Note:

- When power is restored after an outage or when the breaker for an electric junction box is reset, all modes will return to the condition before the supply of power was interrupted.

(For details, refer to the PZ-41SLB-E Instruction Book and Installation Manual or LGH-RX4 Technical Manual.)

14. Lossnay M-NET Remote Controller (PZ-52SF-E)

Operation

[CENTRAL] Display
Displayed when remote operation is prohibited by a centralized control unit, etc.

Ventilation Modes
Indicates the ventilation mode.

Energy recovery (Heat exchange.)	HEAT EX.
Bypass	BY-PASS
Automatic (Heat ex./Bypass)	AUTO

[CHECK] Display
Displayed with the address of the malfunctioning unit (three digits) and the error code (four digits). (For details, refer to the "11.Troubleshooting" section)

[NOT AVAILABLE] Display
Displayed when the Lossnay unit cannot perform the function that has been requested. Display flashes simultaneously with the display of the unavailable function.

[Function Selector] Button
Used to select the ventilation mode from among energy recovery (Heat exchange), bypass, or automatic.

[FILTER] Button
Press two times to reset the filter display.

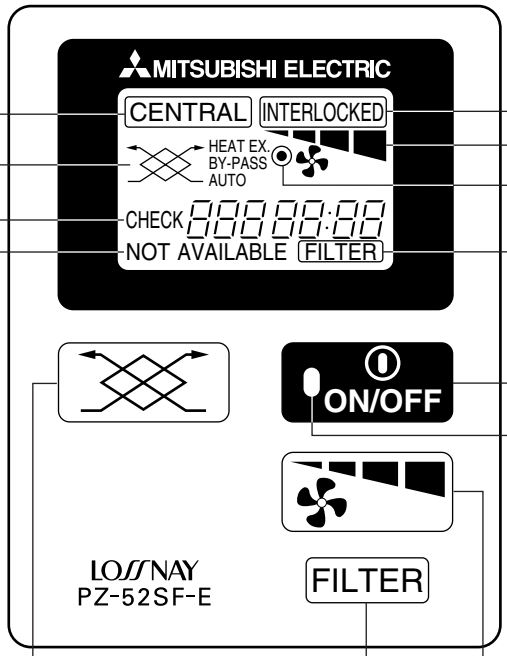

[INTERLOCKED] Display
Displayed when the Lossnay unit starts operation via interlocked indoor unit or external signal.

[Fan speed] Display
Displays the selected fan speed.

Power Display
Indicates that the Lossnay remote controller is on.

[FILTER] Display
Displayed when the operating time reaches the time scheduled for air filter maintenance.

[ON/OFF] Button
Switches between start and stop. The lamp on the button stays lit during operation.

Operation lamp
On during operation; flashes when a malfunction occurs.

[Fan Speed Adjustment] Button*
Used to select the fan speed of either "Low" or "High".

Low → High

***Note:**
- If this button is pressed when trying to switch the fan speed of a Lossnay unit not equipped with the fan speed adjustment, the fan speed display and the "NOT AVAILABLE" display flash and the fan speed does not change.

(For details, refer to the PZ-52SF-E Instruction Book and Installation Manual or LGH-RX4 Technical Manual.)

PZ-52SF-E remote controller cannot be used on Lossnay units set for interlocked operation with Mr. Slim units.

15. Appendix

15.1 Centralized Controller (AG-150A)

15.1.1 Adjusting Indoor Unit Operations

The setting for the control of air conditioning units (general equipments, PWFY) and the permit/prohibit setting from the local remote controller are made on this screen.

* The screen will show the status of the units at the time the screen is opened, any change that may take place after the screen is opened will not be reflected.
* The changes made on the screen will not be reflected until the OK button is pressed.

(1) Air conditioning unit group

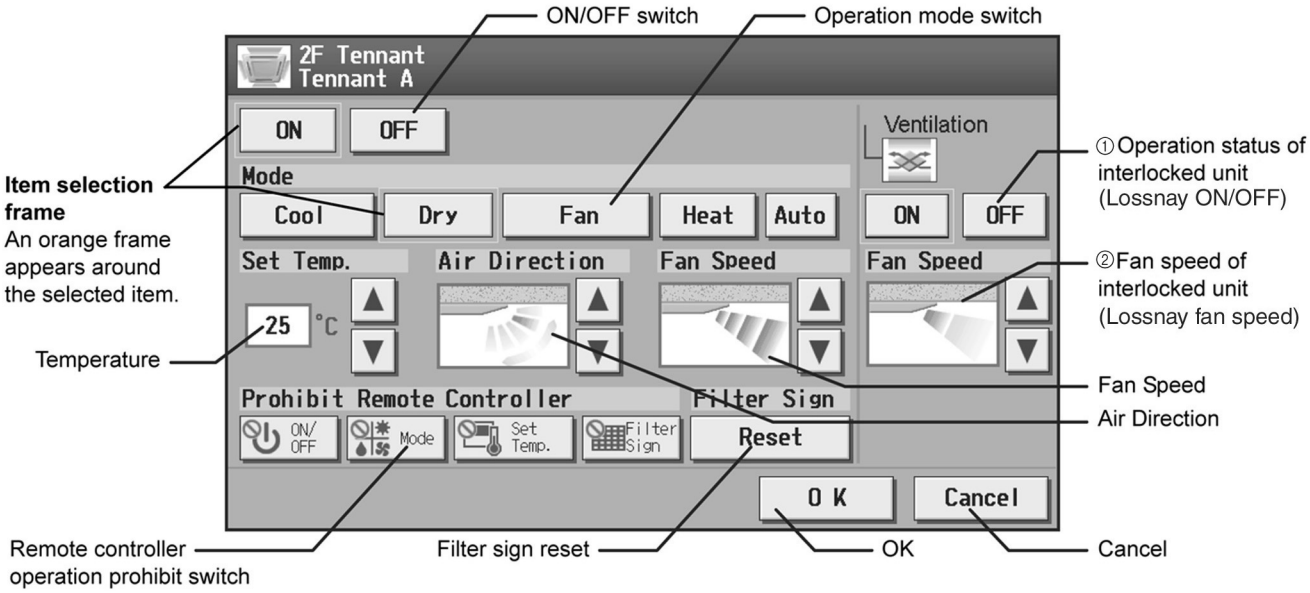

	Function	Operation method	Display
①	Ventilation ON/OFF	Select the ON/OFF status for the interlocked unit.	An orange frame will appear around the selected operation status.
②	Ventilation Fan speed	Set the fan speed with the Up/Down arrows below “Fan Speed”.	2-speed model: → →··· (Low) (High) (Fan speed setting is not available on some indoor units.)

* For details on other function settings, refer to the manual for the AG-150A.

(2) Ventilation equipment (LOSSNAY) group

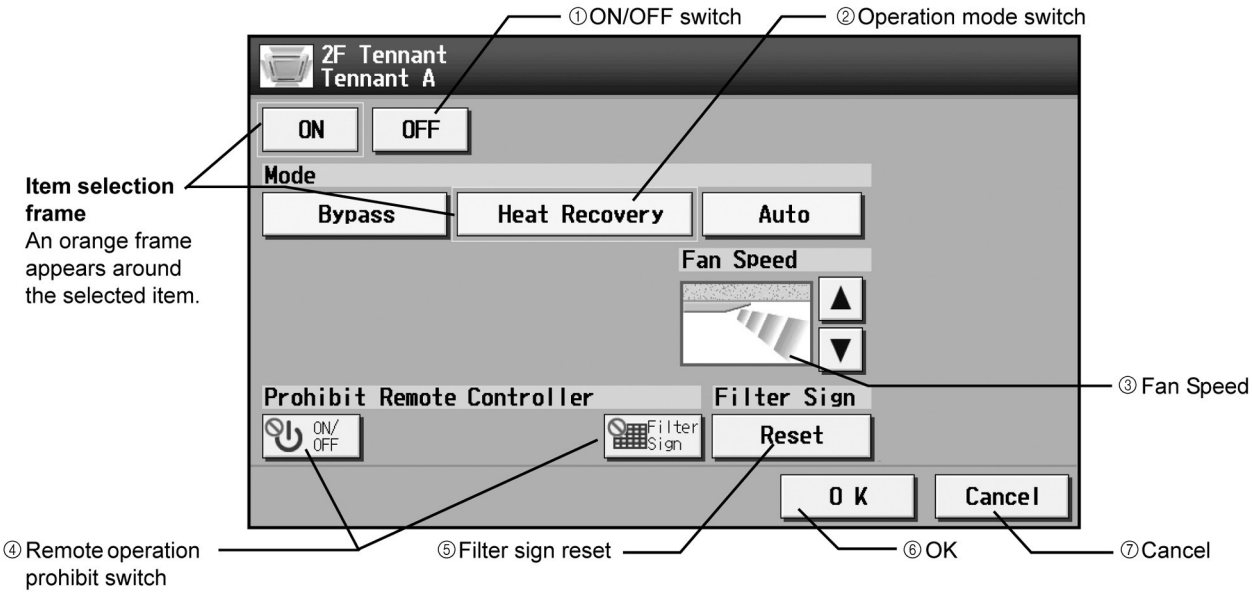

	Function	Operation method	Display
①	ON/OFF	Select the operation status (ON or OFF).	An orange frame will appear around the selected button.
②	MODE	Select the desired operation mode from one of the icons below “Mode”.	An orange frame will appear around the selected mode.
③	Fan speed	Use the Up/Down arrows below “Fun Speed” to set the fan speed.	2-speed model: → (Low) → (High) →… (Fan speed setting is not available on some indoor units.)
④	Remote Prohibit controller	Press the button that corresponds to the desired function and setting to permit or prohibit the operation from the remote controller. The functions that can be prohibited are as follows: ON/OFF and filter sign reset.	Pressing of each button toggles through the following three options: Retention of current status → Permit → Prohibit [Retention of current status / Permit / Prohibit] ON/OFF Filter sign reset
⑤	Filter sign reset	Press “Reset” under “Filter Sign”.	Filter cleaning warning sign will be cleared. (Cumulative operation time is reset.)
⑥	OK	Press the OK button to reflect the change.	Pressing the OK button saves the setting and takes the screen back to the previous screen (Floor layout or Block display).
⑦	Cancel	Press the Cancel button to cancel the change.	Pressing the Cancel button cancels the change and takes the screen back to the previous screen (Floor layout or Block display).

15.1.2 Group Setting

Touch the [Groups] tab in the screen that appears when [Initial Settings] on the menu bar in the setting change window is touched to open the group setting window and set and register the group names for the air conditioning units or general equipment to be connected to AG-150A.

Note: If the user logs in as a building manager, some of the operations may be prohibited.

Note: If the system is connected to the TG-2000A, make all settings and changes from the TG-2000A so that the data in TG-2000A and AG-150A will match.

Note: A contact on the genera interface device is regarded as one unit. The number of units that can be connected to AG-150A is up to 50.

Note: Air-conditioners and general equipment cannot be in the same group.

Note: Remote controllers or system controllers cannot be connected to general equipment.

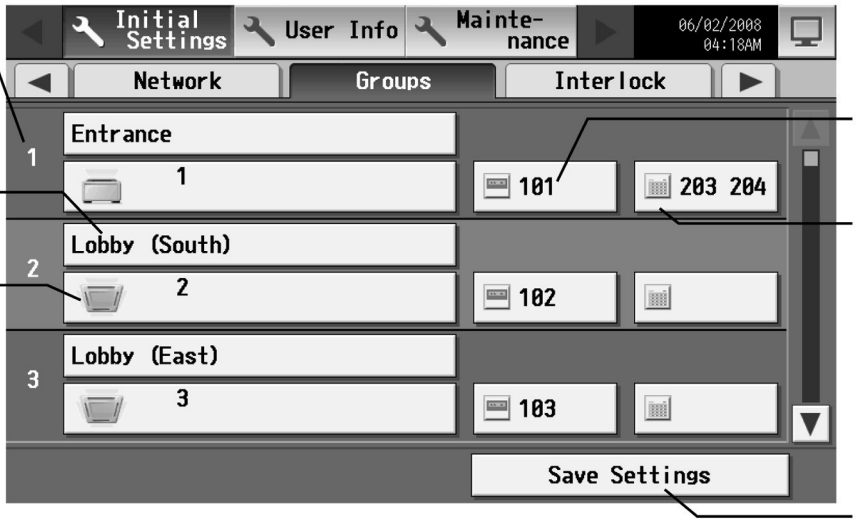

Group No.
Group numbers will be displayed here.

Group Name Input button

Unit selection button

Remote controller selection button

System controller selection button

Save Setting button

1) Setting the Group Name

Press the Group name input button, and enter the group name on the keyboard that appears in 20 characters or less.

Note: The following characters cannot be used in the group name: < > & " '

2) Registering air conditioner units in the group

(1) To register air conditioning units, select the unit selection button of the group to which the air conditioning units will be assigned. Touch the model selection button on the window that appears to display air conditioning units. (To register a ventilation device call up "LOSSNAY", and to register a water heater call up "Hot water supply" on the screen.) Then touch the numbers that are assigned to the units to register. An orange frame will appear around the units that are selected.
Touch again to deselect the selected item (no orange frame).
Press the [OK] button to save the changes, or touch the [Cancel] button to go back to the previous screen without saving any changes.

Note: A maximum of 16 air conditioner units can be registered in one group.

Note: To change the registered units to air-conditioners in the group in which general equipment is registered, disconnect the general equipment first.

Note: Only the same type of equipment (e.g., only the air conditioning units) can be registered to each group.

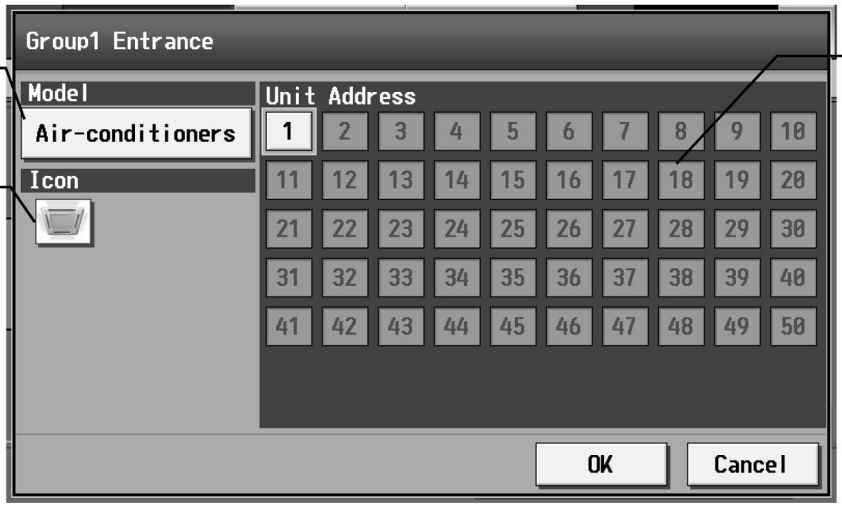

Model selection button

Icon selection button

Unit selection button

(2) To change the icons, touch the icon selection button, and select the desired icon from the ones that appear.

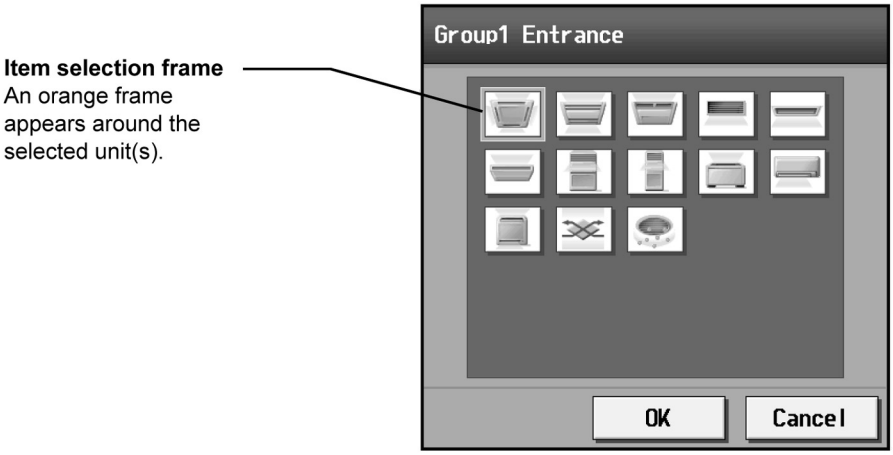

(3) To register a remote controller to a group, touch the remote controller selection button to bring up the remote controller selection window, and then touch the numbers that are assigned to the units to resister. An orange frame will appear around the selected items. Touch again to deselect the selected items. Touch again to deselect the selected item (no orange frame). Press the [OK] button to save the changes, or touch the [Cancel] button to go back to the previous screen without saving any changes.

Note: A maximum of 2 remote controllers can be registered in one group.

Note: MA remote controllers do not need to be registered to a group.

* Only one remote controller can be connected to a system to which three system controllers are connected. No remote controllers can be connected to a system to which four system controllers are connected. (The maximum connectable number is four including system controllers.)
* The remote controllers that are registered to another group will be grayed out and not available for selection.

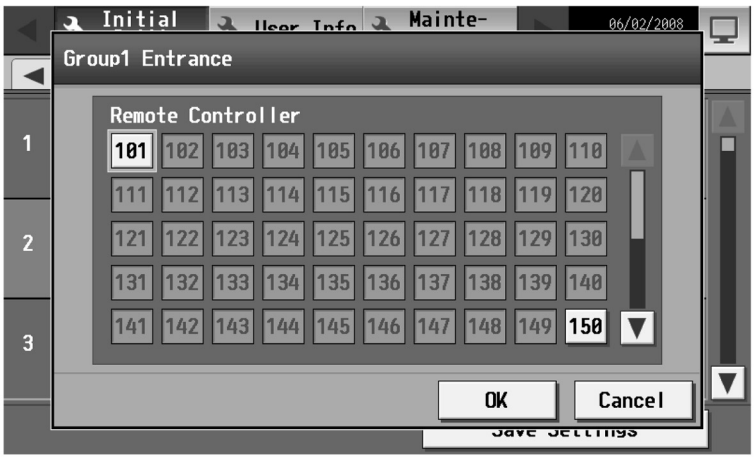

(4) To register a system controller to a group, touch the system controller selection button to bring up the system controller selection window, and then touch the numbers that are assigned to the unit to resister. An orange frame will appear around the selected items. Touch again to deselect the selected items. Touch again to deselect the selected item (no orange frame). Press the [OK] button to save the changes, or touch the [Cancel] button to go back to the previous screen without saving any changes.

Note: The combined number of system controllers and remote controls cannot exceed four.

Note: K-transmission converters do not need to be registered.

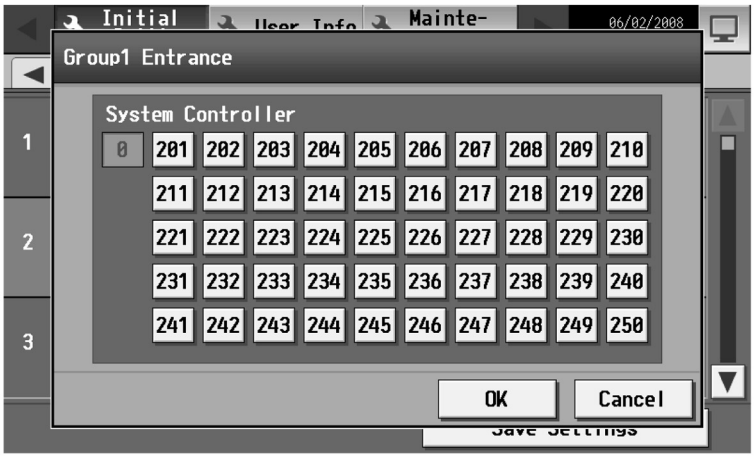

(5) Press [Save setting] on the group setting window to save the settings.
* When changes are made to the settings, it will take a few minutes for the screen to return to the Main menu.

3) Registering general equipment in the group

(1) To register general equipment, touch the unit selection button of the group to set. Select [General equipment (via PAC-YG66DCA)] on the window that appears to bring up the general equipment registration window. Next, touch the unit number of the general interface (PAC-YG66DCA) that is connected to the general equipment to be registered. (A yellow green frame will appear around the selected items.) Select the contact number to which the general equipment is connected, and touch the number assigned to another unit to register the first selected item to the group (The yellow green frame will change to an orange frame.) The item with a yellow green frame is the currently selected unit, and the ones with an orange frame are the units that are already registered to a group. To cancel the connection, select the unit number and touch the selected contact number to deselect it (no orange frame). Press the [OK] button to save the changes, or touch the [Cancel] button to go back to the previous screen without saving any changes.

Note: A maximum of 16 general equipment can be registered in one group.

Note: To change the registered units to general equipment in the group in which air-conditioners are registered, disconnect the air-conditioners first.

Note: Only general equipments can be registered to the same group (no air conditioning units, LOSSNAY units, or PWFY).

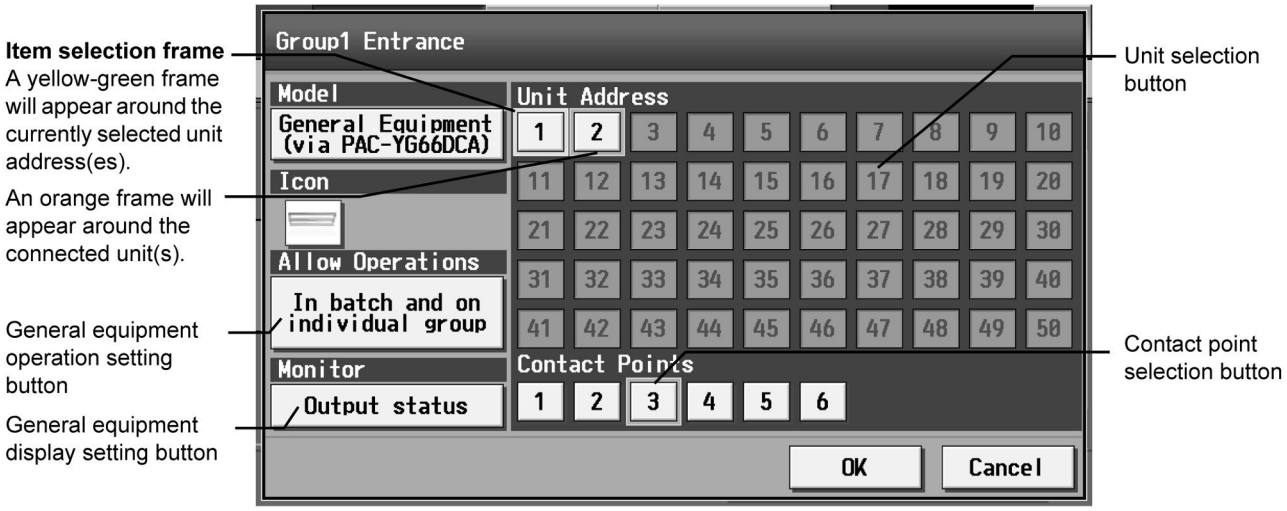

(2) To change the icons, touch the icon selection button, and select the desired icon from the ones that appear.

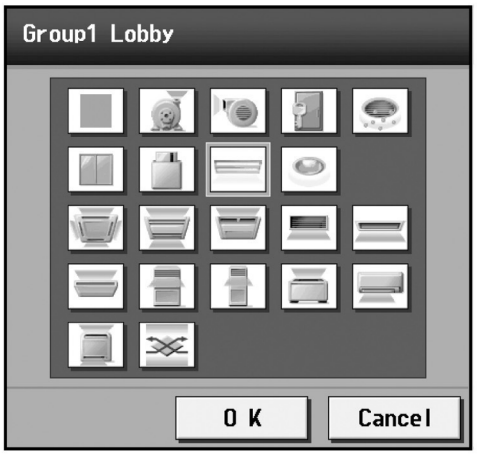

(3) In the [Allow Operation] section, select whether to enable or disable the ON/OFF operation on the Web browser or on the TG-2000A operation screen. Select [In batch and on individual group] to enable only when the collective operation is performed. Select [On individual group] to enable in each group. Select [No operation (Monitor only)] to disable.

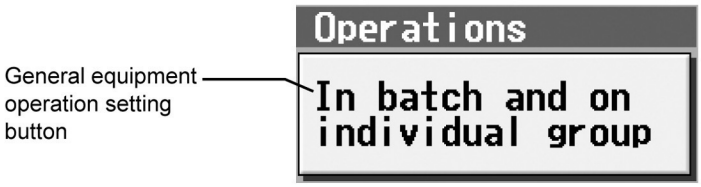

(4) In the [Monitor] section, select whether to display I/P to or from the general equipment on the monitor screen.

(5) Press the [Save setting] on the group setting window to save the settings.

15.1.3 Interlocked Setting

To interlock the ON/OFF operation of LOSSNAY and indoor units, touch [Interlock] on the window that appears when [Initial Settings] on the menu bar in the setting change window is touched, and make the interlock settings.

Note: If the user logs in as a building manager, the operations may be prohibited.

Note: If the system is connected to the TG-2000A, make all settings and changes from the TG-2000A so that the data in TG-2000A and AG-150A will match.

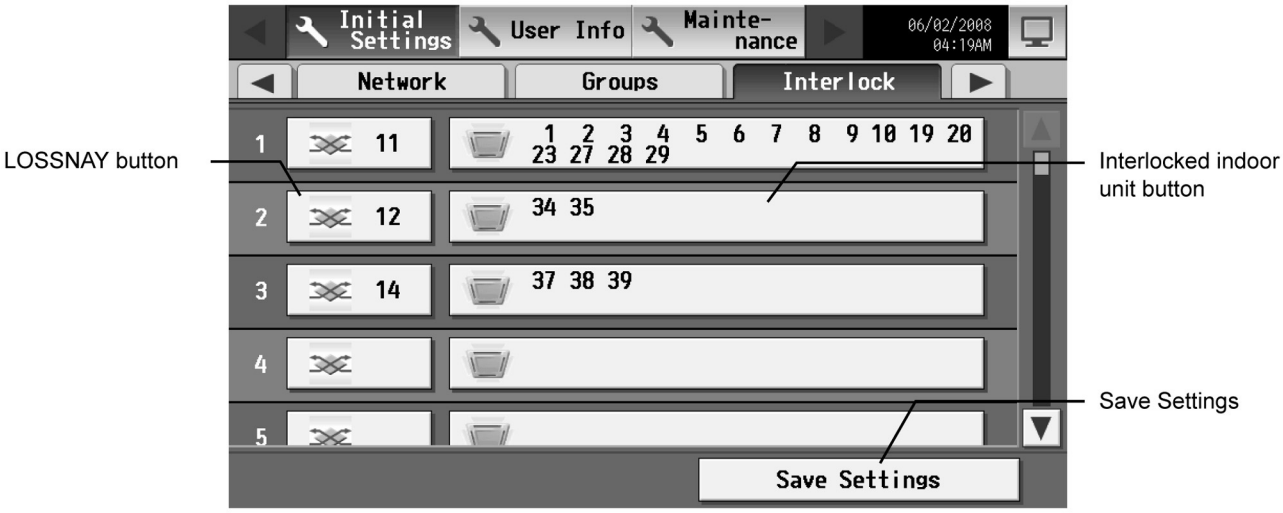

(1) To make the interlock setting for a LOSSNAY, first, touch the LOSSNAY button to bring up the LOSSNAY selection window. Touch the number assigned to the unit to be registered to select it. An orange frame will appear around the selected items. Touch again to deselect the selected items. Touch again to deselect the selected item (no orange frame). Press the [OK] button to save the changes, or touch the [Cancel] button to go back to the previous screen without saving any changes.

(2) Touch the Interlocked indoor unit button to bring up the interlocked indoor unit selection window, and touch the number assigned to the unit to register. An orange frame will appear around the selected items. Touch again to deselect the selected items. Touch again to deselect the selected item (no orange frame). Press the [OK] button to save the changes, or touch the [Cancel] button to go back to the previous screen without saving any changes.

Note: A maximum of 16 indoor units can be registered to operate with one ventilator.

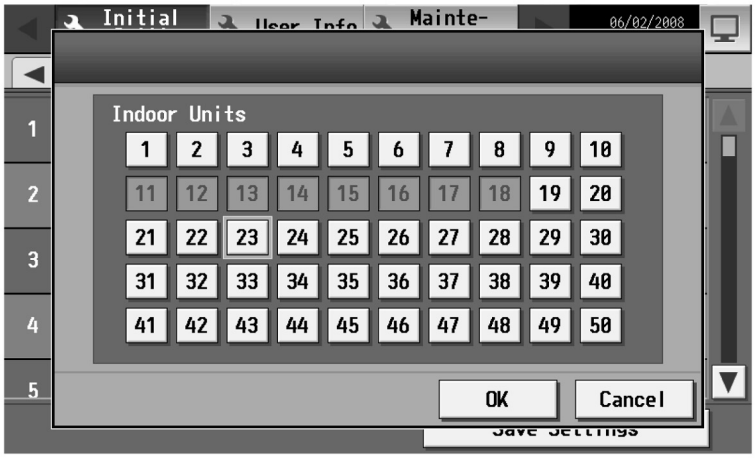

(3) Press the [Save setting] on the LOSSNAY interlock setting window to save the settings.

* When changes are made to the settings, it will take a few minutes for the screen to return to the Main menu.

15.2 Remote Controllers for Mr. Slim indoor units

MA remote controller (PAR-21MAA)

Without Lossnay interlock and indicators.

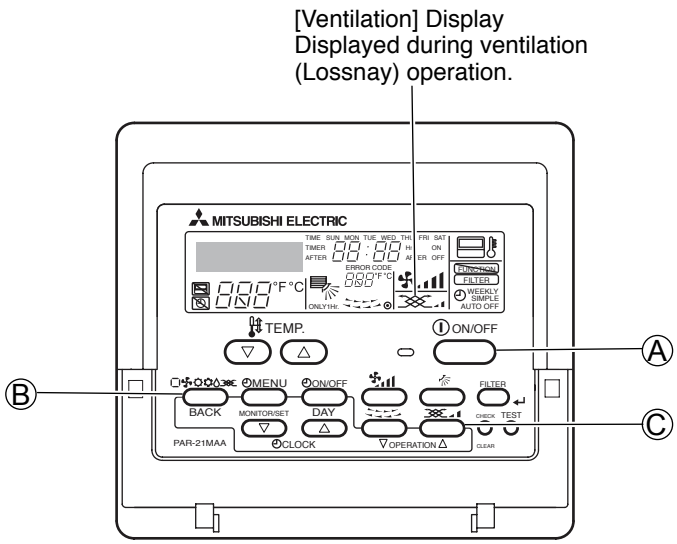

15.2.1 Method for operating Lossnay with A-control remote controller (when interlocked with Mr. Slim)

When operating Lossnay separately

- Press the “ON/OFF” button Ⓐ.
- Press the “Selecting operation” button Ⓑ. The display will show .
  - Use this function when only ventilation is necessary and there isn’t a need for heating or cooling.
  - The does not display when the unit is not interlocked with a ventilation unit.

When changing Lossnay fan speed

- Press the “Ventilation” button Ⓒ.

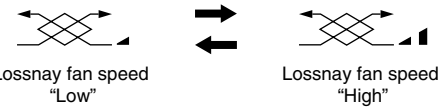

  - The setting changes each time the button is pressed.

When running interlocked ventilation operation

- Press the “ON/OFF” button Ⓐ.
  - If there is an interlocked Lossnay unit, it will start operating automatically.
- Press the “Ventilation” button Ⓒ.
  - The Lossnay fan speed can be set to High or Low.

15.2.2 Function Selection

Perform only when change is necessary with Mr. Slim indoor unit.
(Cannot be performed with CITY MULTI control system.)

Set the functions of each indoor unit from the remote controller as required (See Table 1 for a list of functions).
Table 1. Function List (For a detailed description of the factory settings and mode of each indoor unit, refer to the indoor unit installation manual.)

Function	Settings	Mode number	Setting number	Check	Unit address number
Power failure automatic recovery	Not available	01	1		Unit address number 00
	Available (Wait for approximately four minutes after power is restored.)	01	2		
Measuring Indoor temperature	operating a verage	02	1		
	Set by indoor unit's remote controller	02	2		
	Remote controller's internal sensor	02	3		These items are set for all indoor units.
LOSSNAY connectivity	Not Supported (factory setting)	03	1		
	Supported (indoor unit is not equipped with outdoor-air intake)	03	2		
	Supported (indoor unit is equipped with outdoor-air intake)	03	3		
Power voltage	240 V	04	1		
	220 V, 230 V	04	2		
AUTO mode	Energy-saving cycle automatically enabled	05	1		
	Energy-saving cycle automatically disabled	05	2		
Filter sign	100 Hr	07	1		Unit address number 01 to 04 or AL
	2500 Hr	07	2		
	No filter sign indicator	07	3		
Fan speed	Quiet / Standard (PL(H)(A)-P·AA type)	08	1		
	Standard / High ceiling ① (PL(H)(A)-P·AA type)	08	2		
	High ceiling / High ceiling ② (PL(H)(A)-P·AA type)	08	3		
Number of air outlets	Four directions	09	1		
	Three directions	09	2		
	Two directions	09	3		These items are set for each indoor unit.
Installed options (high-performance filter)	Not supported	10	1		
	Supported	10	2		
Up/down vane setting	No vanes	11	1		
	Equipped with vanes (No. 1 set)	11	2		
	Equipped with vanes (No. 2 set)	11	3		
Energy-saving air flow (Heating mode)	Disabled	12	1		
	Enabled	12	2		
Humidifier (Direct Add-on type)	Not supported	13	1		
	Supported	13	2		

NOTE: If indoor unit functions were changed after installation was complete, always indicate the set contents by entering ◯ or other mark in the appropriate check field of Table 1.

[Function selection workflow]
The following is an example of "Room temperature detection position" of Table 1.
(For the actual setting procedure, see [Setting procedure] ① to ⑩.)

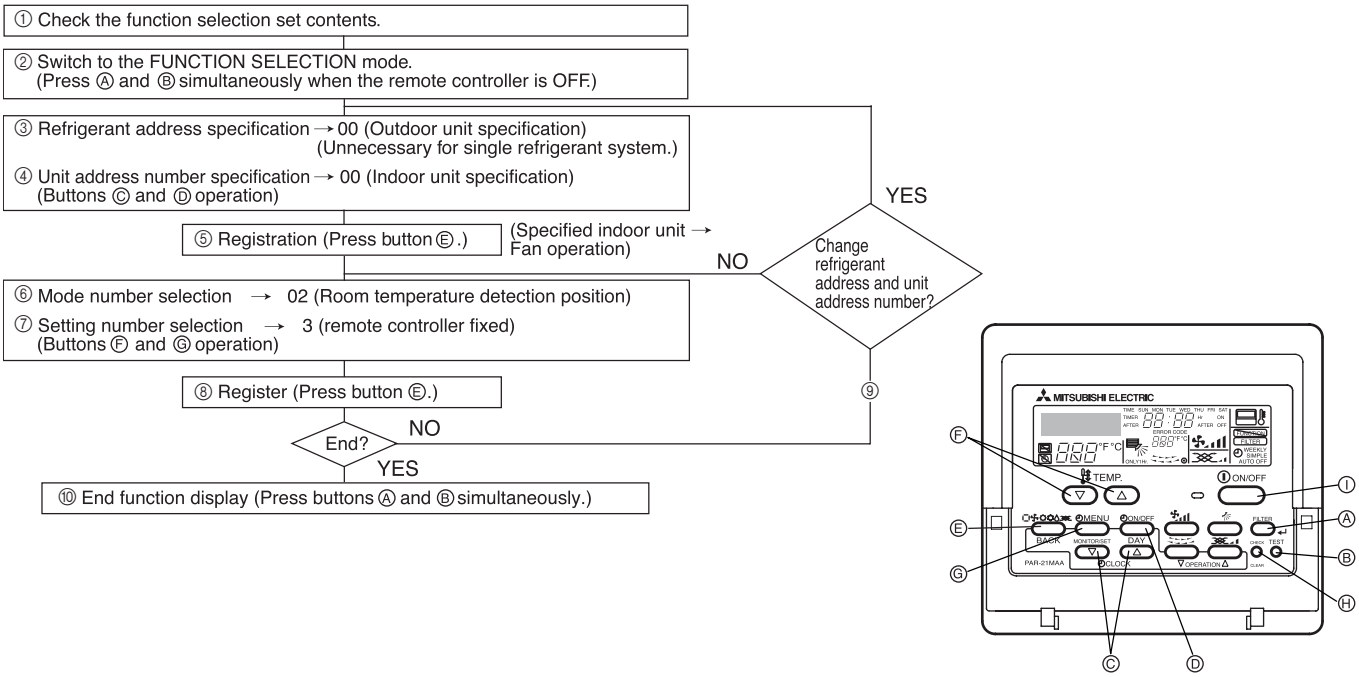

[Procedure] (Set only when change is necessary.)

① Check the settings of each mode. When the mode settings were changed by function selection, the functions of that mode also change.
Check the settings as described in steps ② to ⑦ and change the setting based on the entries in the Table 1 function selection. For factory settings, see the indoor unit installation manual.

② Set the remote controller to OFF.
Press and hold down the Ⓐ [FILTER] and Ⓑ [TEST] buttons simultaneously for at least two seconds.
"FUNCTION"blinks for a while, then the remote controller display changes to the display shown below.

③ Set the outdoor unit refrigerant address number.
When the Ⓒ [TIMER SET (▽) and (△)] buttons are pressed, the refrigerant address number decreases and increases between 00 and 15.
Set it to the refrigerant address number that has function you want to select.
(This step is unnecessary for a single refrigerant system.)

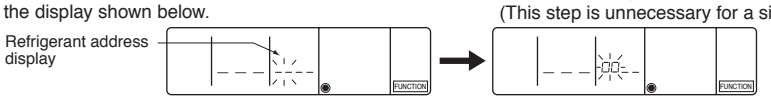

* If the remote controller turns OFF after the "FUNCTION" and room temperature displays " 88 " have flashed for two seconds, there probably is an error in the communication. verify that there are no sources of electronic noise near the transmission line.

NOTE: If you make a mistake during operation, end function selection by step ⑩ and repeat selection from step ②.

④ Set the indoor unit address number.
Press the Ⓓ [Timer selection] button. The unit address number display "– –" flashes.

When the Ⓒ [TIMER SET (▽) and (△)] buttons are pressed, the unit address number changes in 00 → 01 → 02 → 03 → 04 → AL order. Set it to the unit address number of the indoor unit whose functions you want to set.

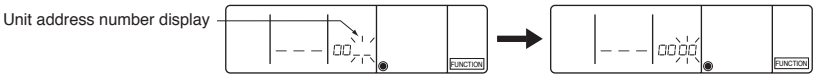

* When setting mode 1 to 3, set the unit address number to "00".
* When setting modes 7 to 11:
- When setting for each indoor unit, set the unit address number to "01-04".
- When batch setting for all indoor units, set the unit address number to "AL".

⑤ Refrigerant address and unit address number registration
Press the Ⓔ [Mode selection] button. The refrigerant address and unit address number are registered.
The mode number display "– –"will flash

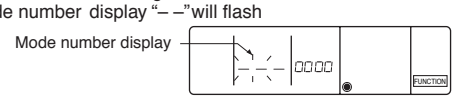

* When " 88 " flashes at the room temperature display, the selected refrigerant address is not in the system.
When "F" is displayed at the unit address number display, and when it flashes with the refrigerant address display, the selected unit address number does not exist. Reset the refrigerant address and unit address number by repeating steps ② and ③.

When registered via the Ⓔ [Mode selection] button, the registered indoor unit begins fan operation. When you want to know the location of the indoor units of the unit address number whose functions were selected, check here. When the unit address number is 00 or AL, all the indoor units of the selected refrigerant address perform the fan operation.

Ex) When refrigerant address 00, unit address number = 02 registered

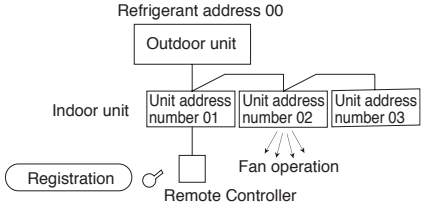

* If different refrigerant systems are grouped and an indoor unit other than the specified refrigerant address performs the fan operation, the refrigerant address set here is probably duplicated.
Recheck the refrigerant address at the outdoor unit rotary switches.

⑥ Mode number selection
Select the mode number you want to set with the Ⓕ [TEMP. (▽) and (△)] buttons. (Only mode numbers that can be switched are able to be selected.)

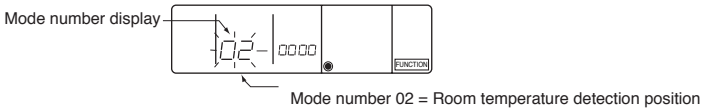

⑦ Select the functions of the selected mode
When the Ⓖ [Timer selection] button is pressed, the current setting number flashes. Use this to check the currently set contents.

Select the setting number using the Ⓕ [TEMP. (▽) and (△)] buttons.

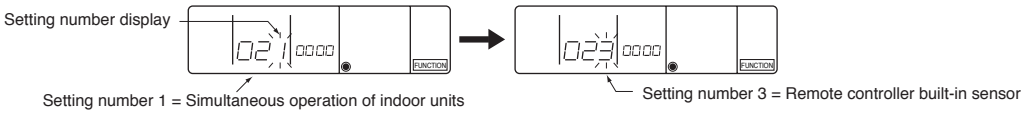

⑧ The contents set at steps ③ to ⑦ are registered.
When the Ⓔ [Mode selection] button is pressed, the mode number and setting number flash and registration begins. The flashing mode number and setting number change to a steady light and setting ends

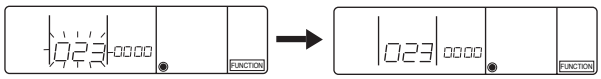

* When "– –"appears at the mode number, setting number displays, and " 88 " flashes at the room temperature display, here is probably an error in the communication. Verify that there are no sources of electronic noise near the transmission line.

⑨ To select more functions, repeat steps ③ to ⑧.

⑩ End function selection.
Press and hold down the Ⓐ [FILTER] and Ⓑ [TEST] buttons simultaneously for at least two seconds.
The function selection display will disappear and the remote controller returns to the air conditioner off display.

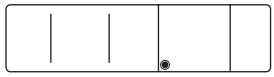

* Do not operate the air conditioner from the remote controller for 30 seconds after function selection is complete.

NOTE: When the functions of an indoor unit were changed by function selection after installation is complete, always indicate the set contents by entering ○ or other mark in the appropriate field of Table 1 function selection.

15.3 ME Remote Controller (PAR-F27MEA)

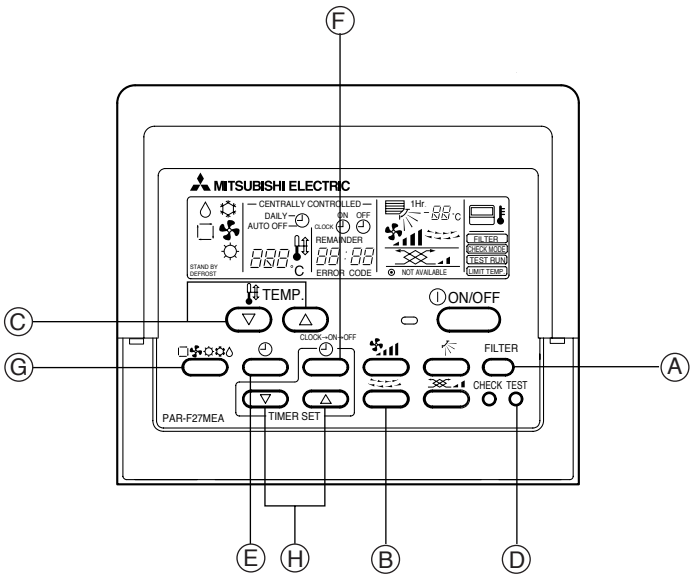

15.3.1 Operating Lossnay with ME remote Controller (When Interlocked with City Multi Indoor Unit)

Operation method is same as A-control remote controller. Refer to page C-100.

15.3.2 Initial registration mode

Register the address of the indoor unit with the remote controller.

① Stop the remote controller by pressing the [ON/OFF] button.
- If the indoor unit is not registered, “HO” appears in the room temperature display. Follow step 2.

② Display “INDOOR UNIT ADDRESS NO.”
- Press and hold down the [FILTER] button (shown as Ⓐ) and the “Louver” button (shown as Ⓑ) simultaneously for two seconds.

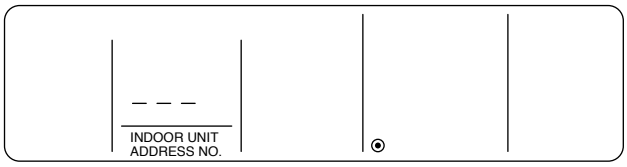

15.3.3 Interlocked registration

③ Display the “OA UNIT ADDRESS NO.”
- Press the “Operation mode” button (shown as Ⓖ).
  Press once again to return to “INDOOR UNIT ADDRESS NO.” shown in Step ②.

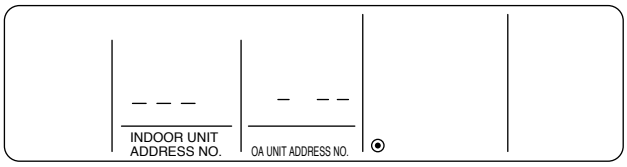

Both “INDOOR UNIT ADDRESS NO.” and “OA UNIT ADDRESS NO.” will appear simultaneously.

- Use the ▲ and ▼ [TEMP] buttons (shown as Ⓒ) to select the address of the indoor unit to be interlocked.
- Use the ▲ and ▼ [TIMER SET] buttons (shown as Ⓗ) to select the address of the Lossnay unit to be registered.

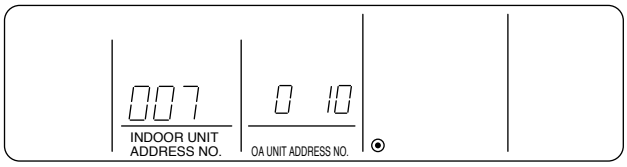

④ To register the interlocked operation of the Lossnay unit and the indoor unit.

- Use the [TEST RUN] buttons (shown as Ⓓ) to register the interlock between the Lossnay indicated in “OA UNIT ADDRESS NO.” and the indoor unit indicated in “INDOOR UNIT ADDRESS NO.”

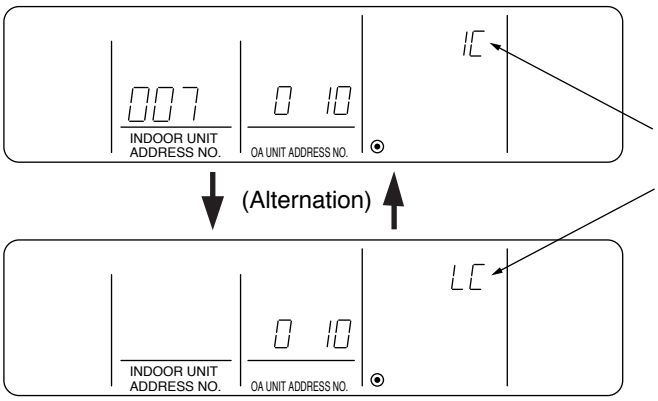

- When registration has been completed successfully, the display alternates between the two displays shown in the figure.
- If there is an error in the registration, “ 88 ” will flash to indicate the number of the unit.

⑤ To return to the normal operation mode.

- Press and hold down both the [FILTER] button (shown as Ⓐ) and the “Louver” button (shown as Ⓑ) at the same time. The function returns the unit to the normal operation mode. (OFF)

Note:

- Set the indoor unit to the smallest address number in a group followed by the Lossnay unit. If this is not performed, the Lossnay unit will not operate.
- If there are multiple indoor units to be interlocked with the Lossnay unit, perform Steps ③ and ④ above for each.

15.3.4 Searching for interlocked registered units

⑥ Display the indoor unit address number at “OA UNIT ADDRESS NO.”

- Press the “Operation mode” button (shown as Ⓖ).
  Press once again to return to “INDOOR UNIT ADDRESS NO.” shown in Step ②.

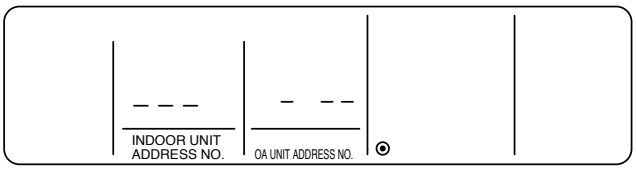

⑦ Use the ▲ and ▼ [TIMER SET] buttons (shown as Ⓗ) to select the address of the indoor unit to be registered.

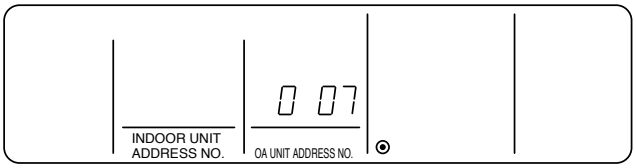

⑧ Press the “Timer/continuous” button (shown as Ⓔ) to alternate between the two displays.

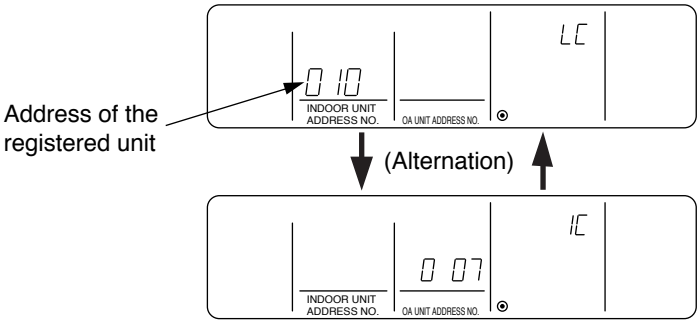

⑨ Press the “Timer/continuous” button (shown as Ⓔ) again. The display will now alternate between the registered unit and the address of the next registered unit. (Display is the same as in step ⑧.)

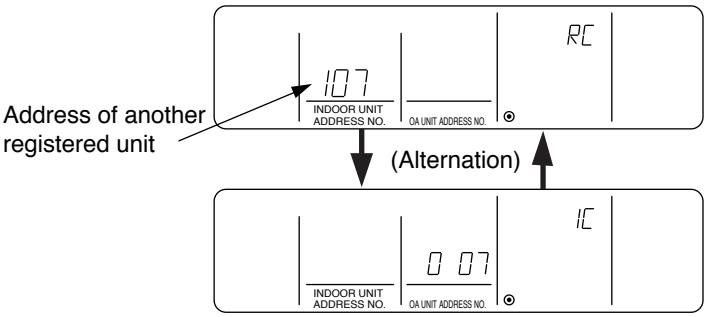

⑩ To return to the normal operation mode.
Press and hold down the [FILTER] button (shown as Ⓐ) and the “Louver” button (shown as Ⓑ) simultaneously to return the unit to the normal operation mode (OFF).

15.3.5 To delete linked unit entries

⑪ From the initial registration mode display, perform an address search for linked units. Display the addresses of the Lossnay units to be deleted. Press the “Time conversion” button (shown as Ⓕ) twice to delete these units, which are displayed according to their address number with the indoor unit.

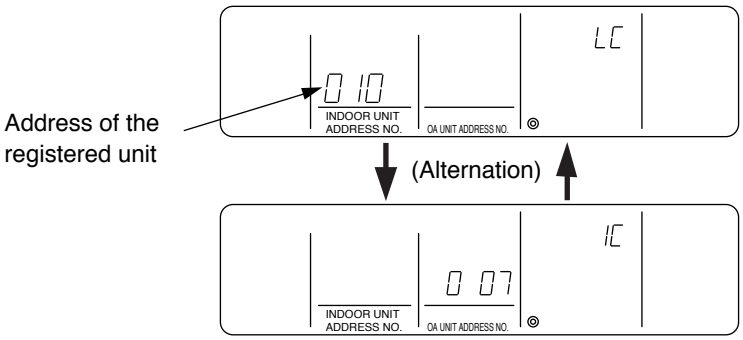

When the above is displayed, press the “Time conversion” button (shown as Ⓕ) twice.

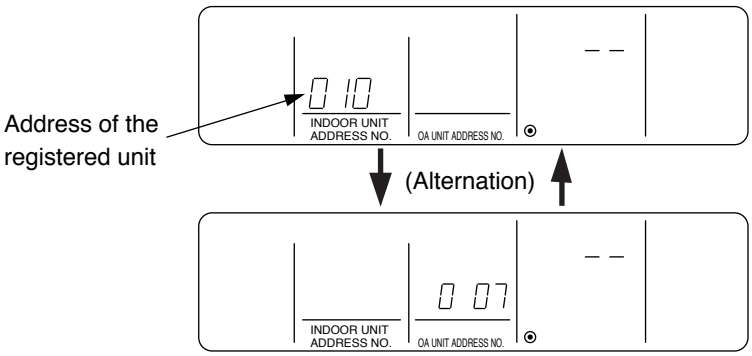

If there is a transmission error, the properties will flash as “ 88 ”. Check the wiring and the address, then perform step ⑪ again.

⑫ To return to the normal operation mode.
Press and hold down the [FILTER] button (shown as Ⓐ) and the “Louver” button (shown as Ⓑ) simultaneously to return the unit to the normal operation mode (OFF).

MITSUBISHI ELECTRIC CORPORATION

Y10-002 Jan.2010 <MEE>

Specifications subject to change without notice.