MITSUBISHI ELECTRIC

HVAC Advanced Products Division

Mr. SLIM®

Split-ductless A/C and Heat Pumps

SUBMITTAL DATA: PLA-A30BA & PUY-A30NHA

30,000 BTU/H CEILING CASSETTE AIR-CONDITIONING SYSTEM

Job Name: Location: Date:

Purchaser: Engineer:

Submitted to: For ☐ Reference ☐ Approval ☐ Construction

Unit Designation: Schedule No.:

GENERAL FEATURES

- Compact side-discharge outdoor unit
- Quiet operation—indoor and outdoor units
- Built-in drain lift mechanism for condensate removal; lifts to 33-7/16 in.
- Wide air flow pattern for better air distribution
- Auto wave airflow in heating mode—unit independently cycles through horizontal and vertical positions for more even heat distribution
- Independent vane adjustment
- Automatic fan speed control
- Self-check function—integrated diagnostics
- Advanced microprocessor control
- Hard-wired, wall-mounted, remote controller (PAR-21MAA)
- Limited warranty: five years on parts and defects and seven years on compressors

OPTIONAL ACCESSORIES

Indoor Unit

- Multi-function Casement (PAC-SH53TM-E)
- Air Outlet Shutter Plates (PAC-SH51SP-E)
- Wireless Signal Receiver (PAR-SA9FA-E)
- Wireless Remote Controller (PAR-FL32MA)
- i-see Sensor Corner Panel (PAC-SA1ME-E)
- High-efficiency (MERV 10) Filter (PAC-SH59KF-E)

Outdoor Unit

- M-NET Adapter (PAC-SF80MA-E)
- Air Outlet Guide (PAC-SG59SG-E)
- Wind Baffle (WB-PA2)

Cooling*

Rated Capacity . . . . . 30,000 Btu/h
Minimum Capacity . . . . . 12,000 Btu/h
SEER . . . . . 13.6 Btu/h/W
Total Input . . . . . 4,100 W
Power Supply . . . . . 208 / 230V, 1-Phase, 60 Hz
Breaker Size . . . . . 30 A

* Rating Conditions (Cooling) - Indoor: 80°F (27°C) DB, 67°F (19°C) WB. Outdoor: 95°F (35°C) DB, 75°F (24°C) WB.

Voltage

Indoor - Outdoor S1-S2 . . . . . AC 208 / 230V
Indoor - Outdoor S2-S3 . . . . . DC 24V
Indoor - Remote Controller . . . . . DC 12V

OPERATING RANGE

		Indoor Intake Air Temp.	Outdoor Intake Air Temp.
Cooling	Maximum	95°F (35°C) DB, 71°F (22°C) WB	115°F (46°C) DB
	Minimum	67°F (19°C) DB, 57°F (14°C) WB	0°F** (-18°C) DB

** With optional wind baffle accessory installed. If not installed, the minimum temperature will be 23°F (-5°C) DB.

Indoor Unit: PLA-A30BA

Remote Controller: PAR-21MAA

Outdoor Unit: PUY-A30NHA

Indoor Unit

MCA . . . . . 1 A
Fan Motor . . . . . 0.51 F.L.A.
Fan Motor Output . . . . . 50 W
Airflow (Lo - M1 - M2 - Hi) . . . . . 490 - 570 - 640 - 740 Dry CFM
460 - 530 - 600 - 710 Wet CFM
Sound Level (Lo - M1 - M2 - Hi) . . . . . 28 - 30 - 32 - 34 dB(A)

DIMENSIONS	UNIT INCHES / MM	PANEL INCHES / MM
W	33-1/16 / 840	37-3/8 / 950
D	33-1/16 / 840	37-3/8 / 950
H	10-3/16 / 258	1-3/8 / 35

Weight (Unit/Grille)
lbs. . . . . 51 / 13
kg . . . . . 23 / 6
Field Drainpipe Size O.D. . . . . 1-1/4" / 32 mm
Wall-mounted Remote Controller PAR-21MAA
(See Data Submittal Sheet)

Outdoor Unit

Compressor . . . . . DC Inverter-driven Rotary
MCA . . . . . 25 A
Fan Motor . . . . . 0.75 F.L.A.
Sound Pressure Level . . . . . 48 dB(A)

DIMENSIONS	INCHES / MM
W	37-3/8 / 950
D	13 + 1-3/16 / 330 + 30
H	37-1/8 / 943

Weight . . . . . 163 lbs. / 74 kg
Refrigerant Type R410A
Refrigerant Pipe Size O.D.
Gas Side . . . . . 5/8" / 15.88 mm
Liquid Side . . . . . 3/8" / 9.52 mm
Max. Refrigerant Pipe Length . . . . . 165' / 50 m
Max. Refrigerant Pipe Height Difference . . . . . 100' / 30 m
Connection Method . . . . . Flared

R410A INVERTER

DIMENSIONS: PLA-A30BA

Unit : inch(mm)

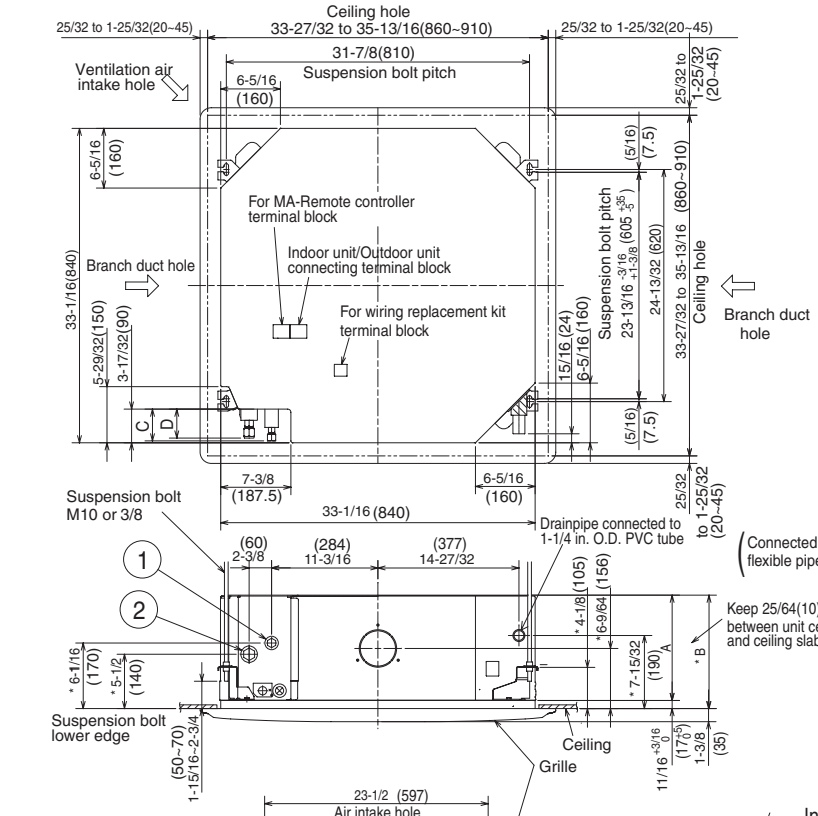

Detail connecting of branch duct (nominal 6" round or nominal 4 x 14" rectangular)

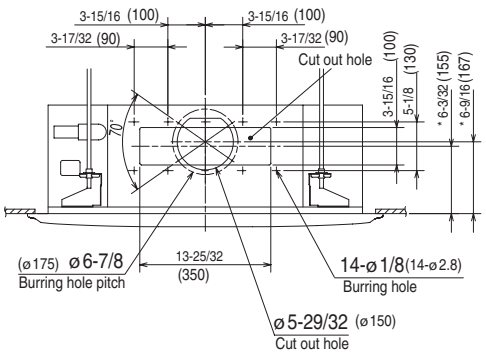

Detail drawing of ventilation air intake connection

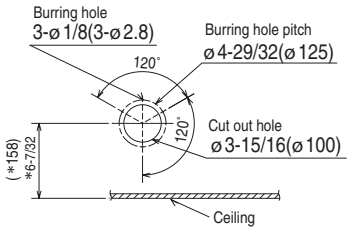

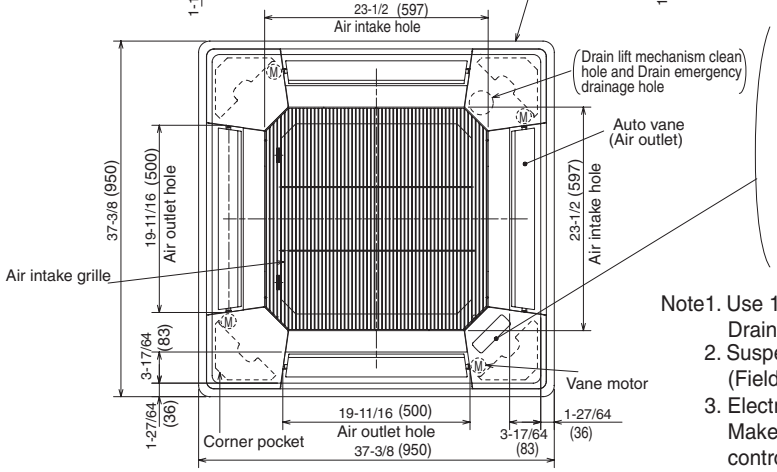

In case of standard grille

In case of wireless remote controller

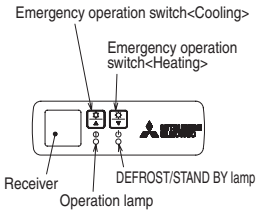

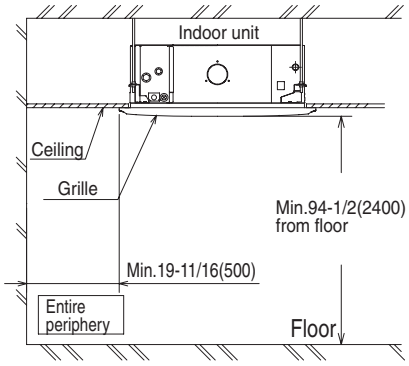

Note1. Use 1-1/4 in. O.D. (32) PVC TUBE.
Drain lift mechanism is included.
2. Suspension bolt, use M10 or W3/8.
(Field supplied)
3. Electrical box may be removed for service purposes.
Make sure to slack the electrical wire little bit for control/power wires connection.
4. The height of the indoor unit is adjustable with the grille attached.
5. For the installation of the optional high efficiency filter, the optional multi-functional casement is required.
1) Add 5-5/16 (135mm) to the dimensions marked with an * in the figures
2) The optional high efficiency filter required optional multi-functional casement.
6. When installing the branch ducts, be sure to insulate adequately. Otherwise condensation may occur.
7. As for necessary installation/service space, please refer to the bottom left figure.

Models	①	②	A	B	C	D
PLA-A12BA PLA-A18BA	Refrigerant pipe ····ø6.35mm Flared connection ····1/4	Refrigerant pipe ····ø12.7mm Flared connection ····1/2	9-1/2 (241)	10-3/16 (258)	3-5/32 (80)	2-29/32 (74)
PLA-A24BA PLA-A30BA	Refrigerant pipe ····ø9.52mm Flared connection ····3/8	Refrigerant pipe ····ø15.88mm Flared connection ····5/8				
PLA-A36BA PLA-A42BA			11-1/16 (281)	11-3/4 (298)	3-11/32 (85)	3-1/32 (77)

DIMENSIONS: PUY-A30NHA

Unit : mm<inch>

1 FREE SPACE (Around the unit)

The diagram below shows a basic example.
Explantion of particular details are given in the installation manuals etc.

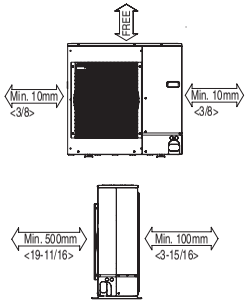

2 SERVICE SPACE

Dimensions of space needed for service access are shown in the below diagram.

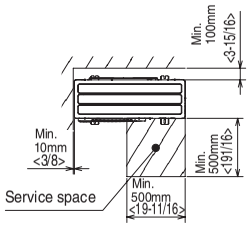

3 FOUNDATION BOLTS

Please secure the unit firmly with 4 foundation (M10<W3/8>) bolts. (Bolts and washers must be purchased locally.)

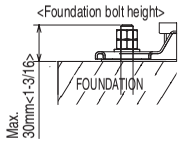

4 PIPING-WIRING DIRECTIONS

Piping and wiring connections can be made from 4 directions: front, right, rear and below.

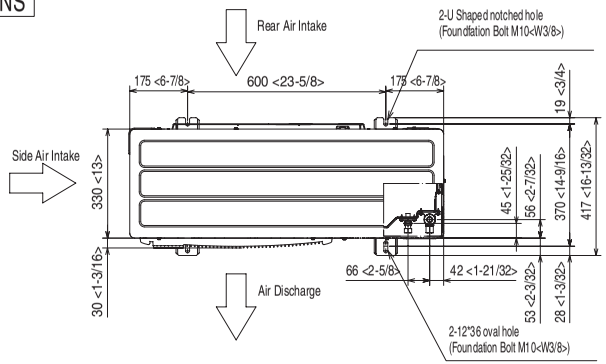

Example of Notes

1 ····Refrigerant GAS pipe connction (FLARE)[15.88<5/8>
2 ····Refrigerant LIQUID pipe connection (FLARE)[9.52<3/8>
*1 ····Indication of STOP VALVE connection location.

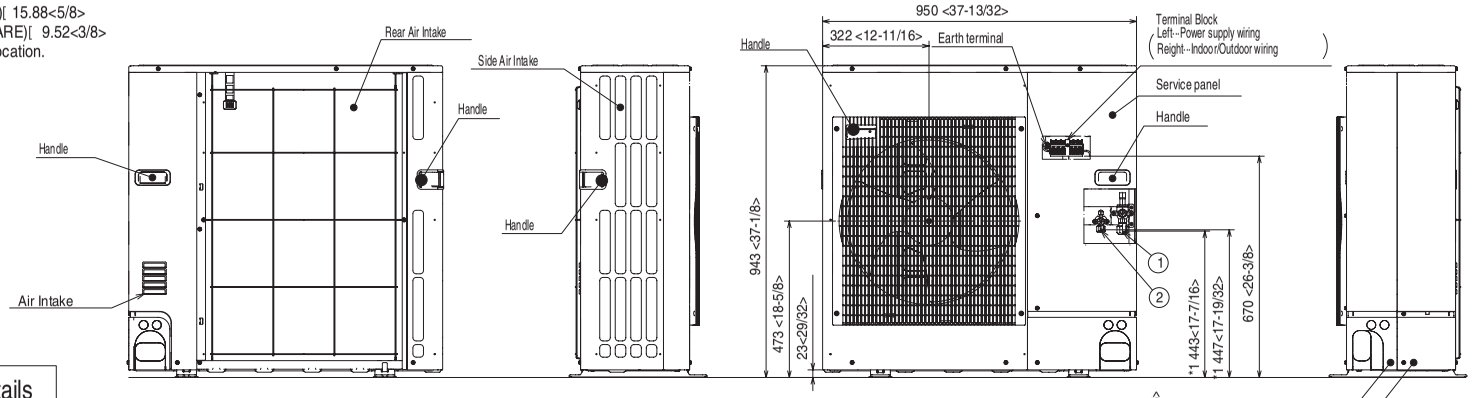

Piping Knockout Hole Details

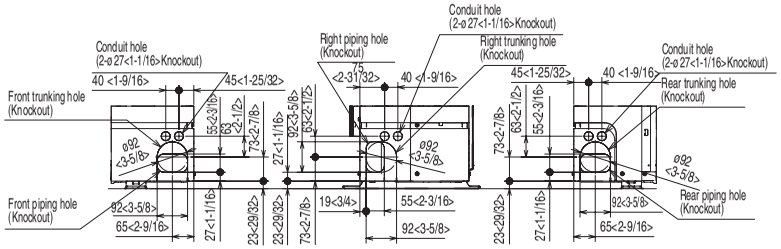

When installing the conduit, Set the attachment to the inner side of each panel.

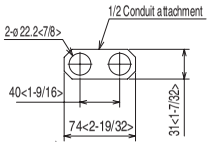

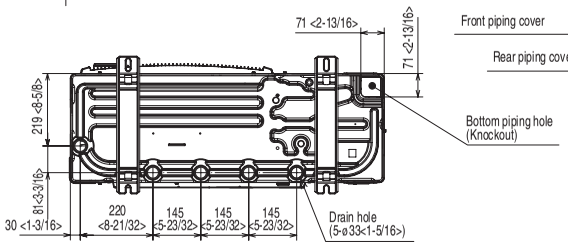

NOTES

C SD - PLA-A30BA / PUY-A30NHA - 200710 © MITSUBISHI ELECTRIC / HVAC 2007

HVAC Advanced Products Division
3400 Lawrenceville Suwanee Rd
Suwanee, GA 30024
Tele: 678-376-2900 • Fax: 800-889-9904
Toll Free: 800-433-4822 (#3)
www.mehvac.com

Specifications are subject to change without notice.