MITSUBISHI ELECTRIC
HVAC Advanced Products Division

Mr. SLIM
Split-ductless A/C and Heat Pumps

SUBMITTAL DATA: PLA-A24AA & PUZ-A24NHA

24,000 BTU/H CEILING CASSETTE HEAT PUMP SYSTEM

Job Name: Location: Date:

Purchaser: Engineer:

Submitted to: For ☐ Reference ☐ Approval ☐ Construction

Unit Designation: Schedule No.:

GENERAL FEATURES

- Limited Warranty – One year on parts and defects, six years on compressor
- Compact, side discharge outdoor unit
- Quiet operation – indoor and outdoor units
- Auto-restart following a power outage
- Self-check function – onboard diagnostics
- Advanced microprocessor control
- Built-in drain lift mechanism for condensate removal
- Zone control
- Hard-wired, wall-mounted, remote controller (PAR-21MAA)
- 2, 3, or 4 way air flow selection / 6" round or 4 X 14" rectangular branch duct connection
- 4" ventilation air inlet
- Washable filter
- Auto changeover for cooling and heat

OPTIONAL FEATURES

- Multi-function casement
- High efficiency filter element
- Air outlet shutter plate(s)
- Wireless Remote Controller kit
- M-Net adapter
- Wind Baffle
- Air outlet guide

COOLING

Rated capacity . . . . . .24,000 Btu/h
Minimum capacity . . . . . 12,000 Btu/h
SEER . . . . . .13.4 Btu/h/W
Total input. . . . . .2500 W
Power supply . . . . . .208 / 230V, 1 Phase, 60 Hz
Breaker size . . . . . 25 A

HEATING

Rated capacity . . . . . 26,000 Btu/h
Minimum capacity . . . . . .12,000 Btu/h
Total input. . . . . .2570 W
HSPF (IV/V) (Btu/h/W). . . . . 8.5 / 6.8

VOLTAGE

Indoor - outdoor S1-S2 . . . . . AC 208/230V
Indoor - outdoor S2-S3 . . . . . DC 24V
Indoor - remote controller . . . . . DC

OPERATING RANGE

		Indoor intake air temp.	Outdoor intake air temp.
Cooling	Max	D.B. 95°F, W.B. 71°F	D.B. 115°F
	Min	D.B. 67°F, W.B. 57°F	D.B. 0°F *
Heating	Max	D.B. 80°F, W.B. 67°F	D.B. 70°F, D.B.59°F
	Min	D.B. 70°F, W.B. 60°F	D.B. 12°F, W.B. 10°F

* With wind baffle installed. If not installed, the minimum temperature will be 23°FDB.

Notes:

Indoor Unit: PLA-A24AA

Remote Controller: PAR-21MAA

Outdoor Unit: PUZ-A24NHA

INDOOR UNIT

MCA . . . . . 1 A
Fan motor . . . . . 0.79 F.L.A.
Fan motor output . . . . . .70 W
Airflow (Lo-M1-M2-Hi) . . . . . .530-570-640-710 Dry CFM
490-530-600-670 Wet CFM
Sound (level) (Lo-M1-M2-Hi) . . . . . .28-30-32-34 dB(A)

DIMENSIONS		UNIT	PANEL
inches	W	33-1/16	37-3/8
	D	33-1/16	37-3/8
	H	10-3/16	1-3/16
mm	W	840	950
	D	840	950
	H	258	30

WEIGHT (unit/panel)

Pounds . . . . . .53 / 11
Kg . . . . . .24 / 5
Field drain pipe Size I.D. (inches/mm) . . . . . 1 / 25.4
Wall-mounted remote controller PAR-21MAA
(see data submittal sheet)

OUTDOOR UNIT

Compressor . . . . . DC inverter/twin rotary
MCA 18
Fan motor . . . . . 0.75 F.L.A.
Sound level. . . . . .48 dB(A)

DIMENSIONS		INCHES	MM
	W	37-3/8	950
	D	13 + 1-3/16	330 + 30
	H	37-1/8	943

Weight (lbs/Kg) . . . . . .165 / 75
Refrigerant type R410A
Refrigerant pipe size O.D. (inches/mm)
gas side . . . . . .5/8 / 15.88
liquid side . . . . . 3/8 / 9.52
Max. refrigerant pipe length (ft/m) . . . . . 165 / 50
Max. refrigerant pipe height difference (ft/m) . . . . . .100 / 30
Connection method . . . . . flared

NOTES :
*1. Rating conditions (cooling)-indoor : D.B. 80°F, W.B. 67°F outdoor : D.B. 95°F, W.B. 75°F.
*2.Rating conditions (heating)-indoor : D.B. 70°F, W.B. 60°F outdoor : D.B. 17°F, W.B. 15°F.

R410A

INVERTER

DIMENSIONS: PLA-A24AA & PUZ-A24NHA

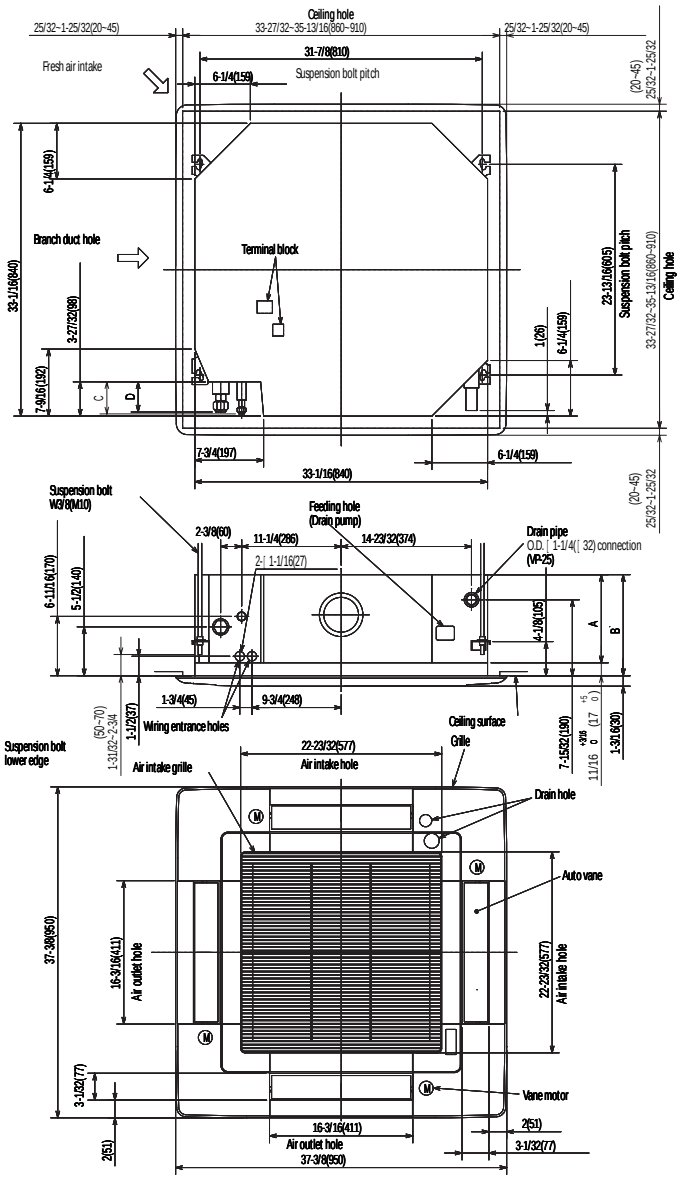

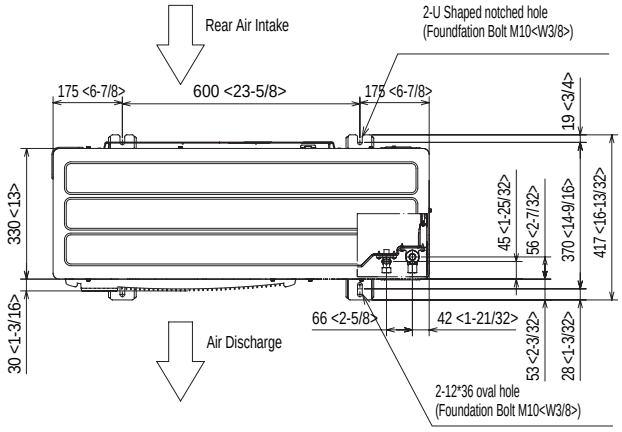

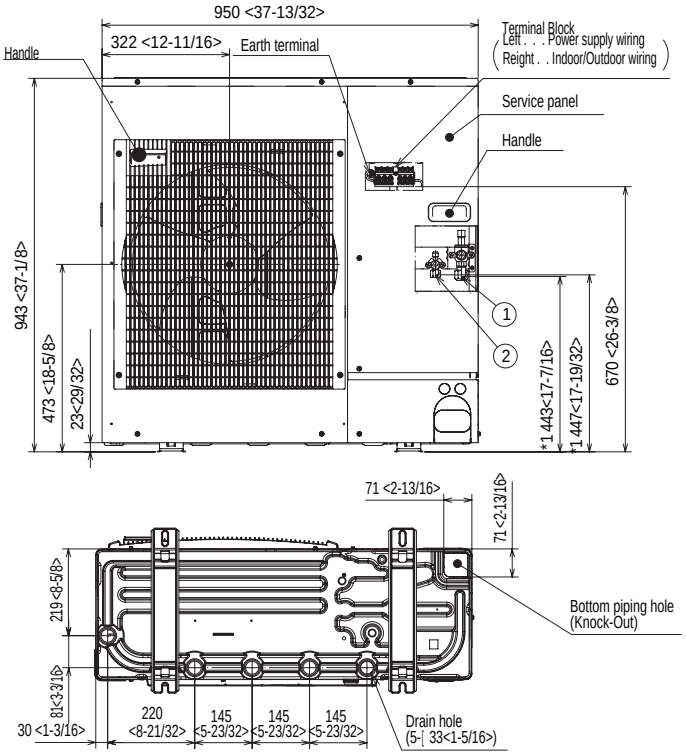

ARI PERFORMANCE CERTIFIED™
ARI Standard 210/240 UHP

ETL LISTED®

ISO 14001 JACO UKAS ENVIRONMENTAL MANAGEMENT 051

BVQI ISO 9001 UKAS QUALITY MANAGEMENT

Energy Star PARTNER

MITSUBISHI ELECTRIC

HVAC Advanced Products Division
Mitsubishi Electric & Electronics USA, Inc.

3400 Lawrenceville Suwanee Rd
Suwanee, GA 30024
Tele: 678-376-2900 • Fax: 800-889-9904
Toll Free: 800-433-4822 (#3)
www.mehvac.com

Specifications are subject to change without notice.

 © MITSUBISHI ELECTRIC / HVAC 2006