MITSUBISHI ELECTRIC

Air Conditioning Control System

# Centralized Controller EB-50GU-A/EB-50GU-J
# Installation and Instructions Manual

Safety notes are marked with ⚠**WARNING** or ⚠**CAUTION**, depending on the severity of possible consequences that may result when the instructions are not followed exactly as stated.
Proper installation is important for your safety and proper functioning of the units.
Thoroughly read the following safety precautions prior to installation.

To ensure safety and proper operation of the unit, the unit should only be installed by qualified personnel.
After reading this manual, pass the manual on to the end user to retain for future reference.
The users should keep this manual for future reference and refer to it as necessary. This manual should be made available to those who repair or relocate the units. Make sure that the manual is passed on to any future air conditioning system users.


1. Introduction ..... 7
1-1. Parts names ..... 7
1-2. Monitoring and operation of the air conditioners ..... 9
1-3. “Group” and “Block” Definitions ..... 9
2. Package contents ..... 10
3. Specifications ..... 12
3-1. Product specifications ..... 12
3-2. External dimensions ..... 13
4. System configuration ..... 14
4-1. Number of connectable units ..... 15
4-2. Setting M-NET address for various devices ..... 16
4-3. M-NET system setting example ..... 20
5. Installation ..... 22
5-1. Field-supplied items ..... 22
5-2. M-NET transmission cable length ..... 24
5-3. Installation ..... 26
6. Wiring connections ..... 30
6-1. Removing the cover to access the wiring ..... 30
6-2. Connecting protective ground wire ..... 31
6-3. Connecting M-NET transmission cables and DC power cables (24 VDC) ..... 32
6-4. Reinstalling the cover ..... 33
6-5. Connecting LAN cable ..... 34
7. Initial settings ..... 35
7-1. Quick IP address setting ..... 37
7-2. Network settings on the Web browser ..... 38
8. Test run ..... 39
8-1. Collective operation ON/OFF ..... 39
8-2. Service LEDs ..... 41
9. Product features ..... 43
10. External input/output ..... 49
10-1. External signal input function ..... 50
10-2. External signal output function ..... 54
11. Error code list ..... 56

# Safety precautions

- Thoroughly read the following safety precautions prior to installation.
- Observe these precautions carefully to ensure safety.

| | |
|---|---|
| ⚠ **WARNING** | Indicates a risk of death or serious injury. |
| ⚠ **CAUTION** | Indicates a risk of injury or structural damage. |

- Nomenclature

(Prohibited actions) (Do not touch) (No water) (No wet hands) (Fire hazards) (Electric shock hazards) (Injury hazards) (Important actions) (Grounding required)

- After reading this manual, pass the manual on to the end user to retain for future reference.
- The users should keep this manual for future reference and refer to it as necessary. This manual should be made available to those who repair or relocate the units. Make sure that the manual is passed on to any future air conditioning system users.

**All electric work must be performed by qualified personnel.**

## General precautions

### ⚠ WARNING

This appliance is not intended for use by persons (including children) with reduced physical, sensory or mental capabilities, or lack of experience and knowledge, unless they have been given supervision or instruction concerning use of the appliance by a person responsible for their safety.
Children should be supervised to ensure that they do not play with the appliance.

Do not install the controller in a place where large amounts of oil, steam, organic solvents, or corrosive gases, such as sulfuric gas, are present or where acidic/alkaline solutions or sprays are used frequently. These substances can compromise the performance of the controller or cause certain components of the controller to corrode, which can result in electric shock, malfunctions, smoke, or fire.

To reduce the risk of injury or electric shock, before spraying a chemical around the controller, stop the operation and cover the controller.

To reduce the risk of injury or electric shock, stop the operation and switch off the power supply before cleaning, maintaining, or inspecting the controller.

To reduce the risk of shorting, current leakage, electric shock, malfunctions, smoke, or fire, do not wash the controller with water or any other liquid.

To reduce the risk of electric shock, malfunctions, smoke or fire, do not operate the switches/buttons or touch other electrical parts with wet hands.

Properly install all required covers to keep moisture and dust out of the controller. Dust accumulation and water can cause electric shock, smoke, or fire.

To reduce the risk of injury, keep children away while installing, inspecting, or repairing the controller.

### ⚠ CAUTION

To reduce the risk of fire or explosion, do not place flammable materials or use flammable sprays around the controller.

To reduce the risk of damage to the controller, do not directly spray insecticide or other flammable sprays on the controller.

To reduce the risk of injury and electric shock, avoid contact with sharp edges of certain parts.

To reduce the risk of injury, wear protective gear when working on the controller.

## Precautions during installation

### ⚠ WARNING

Do not install the controller where there is a risk of leaking flammable gas.
If flammable gas accumulates around the controller, it may ignite and cause a fire or explosion.

Take appropriate safety measures against earthquakes to prevent the controller from causing injury.

Properly dispose of the packing materials. Plastic bags pose suffocation hazard to children.

To prevent injury, install the controller on a flat surface strong enough to support its weight.

### ⚠ CAUTION

To reduce the risk of shorting, current leakage, electric shock, malfunctions, smoke, or fire, do not install the controller in a place exposed to water or in a condensing environment.

Controller must be installed by qualified personnel according to the instructions detailed in this manual. Improper installation may result in electric shock or fire.

## Precautions during wiring

### ⚠ WARNING

To reduce the risk of damage to the controller, malfunctions, smoke, or fire, do not connect the power cable to the signal terminal block.

Properly secure the cables in place and provide adequate slack in the cables so as not to stress the terminals. Improperly connected cables may break, overheat, and cause smoke or fire.

To reduce the risk of injury or electric shock, switch off the main power before performing electrical work.

All electric work must be performed by a qualified electrician according to the local regulations, standards, and the instructions detailed in this manual.
Capacity shortage to the power supply circuit or improper installation may result in malfunction, electric shock, smoke, or fire.

To reduce the risk of electric shock, install a breaker and a residual current circuit breaker on the power supply.
To reduce the risk of electric shock, smoke, or fire, install a breaker for each controller.

Use properly rated breakers and fuses (breaker, local switch <switch + fuse>, no-fuse breaker). The use of a breaker with a breaking capacity greater than the specified capacity may cause electric shock, malfunctions, smoke, or fire.

To reduce the risk of current leakage, overheating, smoke, or fire, use properly rated cables with adequate current carrying capacity.

Proper grounding must be provided by a licensed electrician.
Do not connect the protective ground wire to a gas pipe, water pipe, lightning rod, or telephone wire. Improper grounding may result in electric shock, smoke, fire, or malfunction due to electrical noise interference.

### ⚠ CAUTION

To reduce the risk of electric shock, shorting, or malfunctions, keep wire pieces and sheath shavings out of the terminal block.

To reduce the risk of shorting, current leakage, electric shock, or malfunctions, keep the cables out of contact with controller edges.

To reduce the risk of electric shock, malfunctions, or fire, seal the gap between the cable access holes with putty.

## Precautions for moving or repairing the controller

### ⚠ WARNING

The controller should be repaired or moved only by qualified personnel. Do not disassemble or modify the controller.
Improper installation or repair may cause injury, electric shock, or fire.

### ⚠ CAUTION

To reduce the risk of shorting, electric shock, fire, or malfunction, do not touch the circuit board with tools or with your hands, and do not allow dust to accumulate on the circuit board.

## Additional precautions

To avoid damage to the controller, use appropriate tools to install, inspect, or repair the controller.

This controller is designed for exclusive use with the Building Management System by Mitsubishi Electric. The use of this controller for with other systems or for other purposes may cause malfunctions.

Take appropriate measures against electrical noise interference when installing the air conditioners in hospitals or facilities with radio communication capabilities.
Inverter, high-frequency medical, or wireless communication equipment as well as power generators may cause the air conditioning system to malfunction. Air conditioning system may also adversely affect the operation of these types of equipment by creating electrical noise.

To avoid malfunctions, do not bundle power cables and signal cables together, or place them in the same metallic conduit.

To reduce the risk of electric shock, install and wire the unit with the power to the PAC-SC51KUA power supply unit turned off.

To avoid causing damage or fire, do not apply an AC voltage or a voltage higher than 32 VDC to the M-NET or the power supply (24 VDC) terminal blocks on the controller.

To avoid damage to the controller, do not overtighten the screws.

To avoid damage to the controller, do not make holes on the controller cover.

Do not use solderless terminals to connect cables to the terminal block. Solderless terminals may come in contact with the circuit board and cause malfunctions.

To avoid deformation and malfunction, do not install the controller in direct sunlight or where the ambient temperature may exceed 55°C (131°F) or drop below -10°C (14°F).

Do not install the controller on the panel door of the metal control box.
Vibrations or shocks to the controller may damage the controller or cause the controller to fall.

To prevent unauthorized access, always use a security device such as a VPN router when connecting to the Internet.

# 1. Introduction

EB-50GU-A/EB-50GU-J is a centralized controller that can be operated over a Local Area Network (LAN).
Any connected air conditioning systems can be operated or monitored on the Web browser.
Refer to the Web browser instruction books (separate volume) for how to use the Web functions.
Hereinafter, EB-50GU-A and EB-50GU-J, unless otherwise specified, will be called “EB-50.”

## 1-1. Parts names

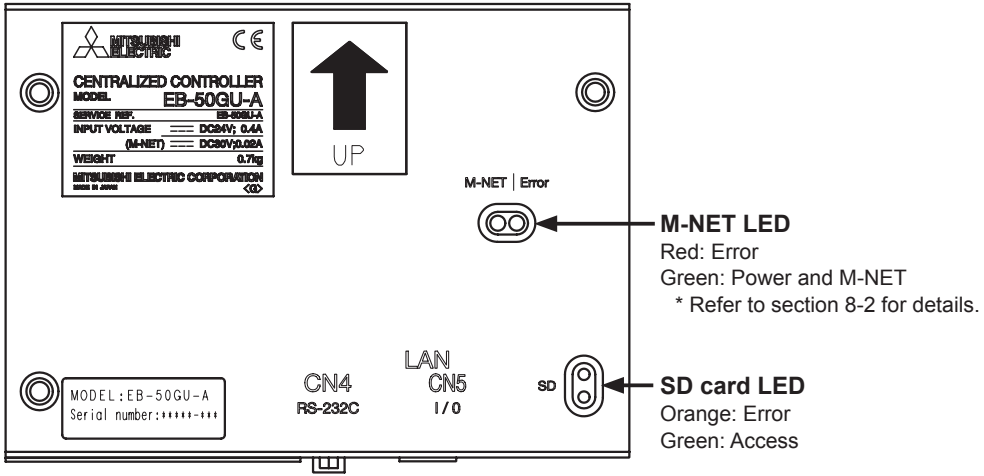

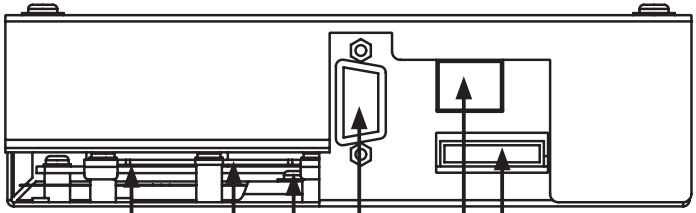

**CN5**
Connects to an external input/output adapter PAC-YG10HA.

**LAN**
Connects to other units of equipment over the LAN via a HUB.

**CN4 (RS-232C)**
Unused (only for maintenance)

**Ground (M4)**
Connects to protective ground wire.

**TB2 (V+, V-) (M3.5)**
DC power supply terminal block
Connects to DC power cables (24 VDC) from power supply unit (PAC-SC51KUA).
(V+: 24 VDC, V-: 0 V)

**TB3 (A, B, S) (M3.5)**
M-NET transmission terminal block
Connects to M-NET transmission cables from power supply unit (PAC-SC51KUA).
(A, B: Non-polarized, S: Shield)

## 1-2. Monitoring and operation of the air conditioners

To monitor and operate the air conditioners, the EB-50 and a PC are required.
Purchase the required licenses from your dealer. Refer to the Instruction Book (Web Browser for Initial Settings) for license registration.

**Note**

- The required licenses vary, depending on the functions to be used. Refer to the License Classification List for details.

## 1-3. “Group” and “Block” Definitions

The terms “Group” and “Block” used in this manual are defined as follows.

Group: Group is a group of air conditioning units and controllers and is the smallest unit that the EB-50 can control.
The maximum number of units that each group can contain is 16.

Block: Block is one or more groups.

# 2. Package contents

The following items are included in the package.

| | Package contents | Qty. |
|---|---|---|
| (1) | Centralized controller (EB-50)<br>* A specified microSD card is already installed. | 1 |
| (2) | L-fitting | 2 |
| (3) | M3 (8 mm (5/16 in)) roundhead screw (for fixing L-fitting)* | 4 |
| (4) | DIN rail attachment | 2 |
| (5) | M3 (6 mm (1/4 in)) roundhead screw (for fixing DIN rail attachment)* | 8 |
| (6) | Installation and Instructions Manual (this manual) | 1 |
| (7) | CD-ROM<br>├ Installation and Instructions Manual<br>├ Instruction Book (Web Browser for Initial Settings)<br>├ Instruction Book (Web Browser for System Maintenance Engineer)<br>├ Instruction Book (Web Browser for User)<br>└ License Classification List<br><br>**Note**<br>● The CD-ROM can only be played on a CD-drive or a DVD-drive. Do not attempt to play the CD-ROM on an audio CD player as this may damage your ears and/or speakers.<br>● Each document is in PDF format. Viewing documents requires a computer with Adobe® Reader® or Adobe® Acrobat® installed. “Adobe® Reader®” and “Adobe® Acrobat®” are registered trademarks of Adobe Systems Incorporated. | 1 |

* M4 screws for fixing the EB-50 inside the metal control box using the L-fittings are not included.
* Be sure to use the supplied screws (3) and (5). Other screws may damage the control board depending on the screw length.
* ISO metric screw thread

**Notes on the microSD card installed on the EB-50**

- The microSD card installed on the EB-50 has been set up at the factory. Do not use other SD cards as proper function cannot be guaranteed.
- The microSD card installed on the EB-50 differs from the ones sold on the market.
- The EB-50 will not start up if the microSD card does not function properly or is not installed.
- Only the microSD card that has been formatted on EB-50 can be used.
- Do not use the microSD card installed on the EB-50 for any other equipment.

**Precautions for the replacement of microSD card**

- Because of the characteristics of the microSD card, the read/write performance may degrade over time. It is recommended to replace the microSD card with our microSD card (available as service parts) every 10 years, even if it is not damaged.
- If the microSD card becomes damaged, the EB-50 settings data and energy management data will be lost. It is recommended to back up these data periodically.
  The EB-50 settings data can be backed up to an external memory, and these data can be restored to the EB-50. (Refer to section 9 “Utility” in the Instruction Book (Web Browser for Initial Settings) for details.) The energy management data can only be output in a CSV file, and these data cannot be restored to the EB-50. (Refer to chapter 9 “Maintenance” in the Instruction Book (Web Browser for System Maintenance Engineer) for details.)
- Only a qualified technician should insert or remove the microSD card.
- Before inserting or removing the microSD card, turn off the power to the EB-50.
- If the microSD card becomes damaged, consult your dealer for a replacement.

# 3. Specifications

## 3-1. Product specifications

| Item | | | Specifications | |
|---|---|---|---|---|
| Power supply | Controller drive | | 24 VDC ± 5% | * Requires a power supply unit PAC-SC51KUA (sold separately) |
| Interface | M-NET transmission terminal | | 17–32 VDC | |
| | External input/output | | 12 or 24 VDC (requires an external power supply) | |
| | LAN | | Ethernet 100BASE-TX/10BASE-T | |
| | RS-232C | | D-sub 9-pin Male | |
| Ambient conditions | Temperature | Operating temperature range | -10°C – +55°C [+14°F – +131°F] | |
| | | Storage temperature range | -20°C – +60°C [-4°F – +140°F] | |
| | Humidity | | 30%–90% RH (Non-condensing) | |
| Dimensions (W × H × D) | | | 165 × 120 × 46 mm<br>[6-1/2 × 4-3/4 × 1-13/16 in] | |
| Weight | | | 0.7 kg [2 lbs] | |
| Installation conditions | | | Inside the metal control box<br>* To be used in a business office or similar environment | |

## 3-2. External dimensions

Main body (when L-fittings are installed)

Unit: mm (in)

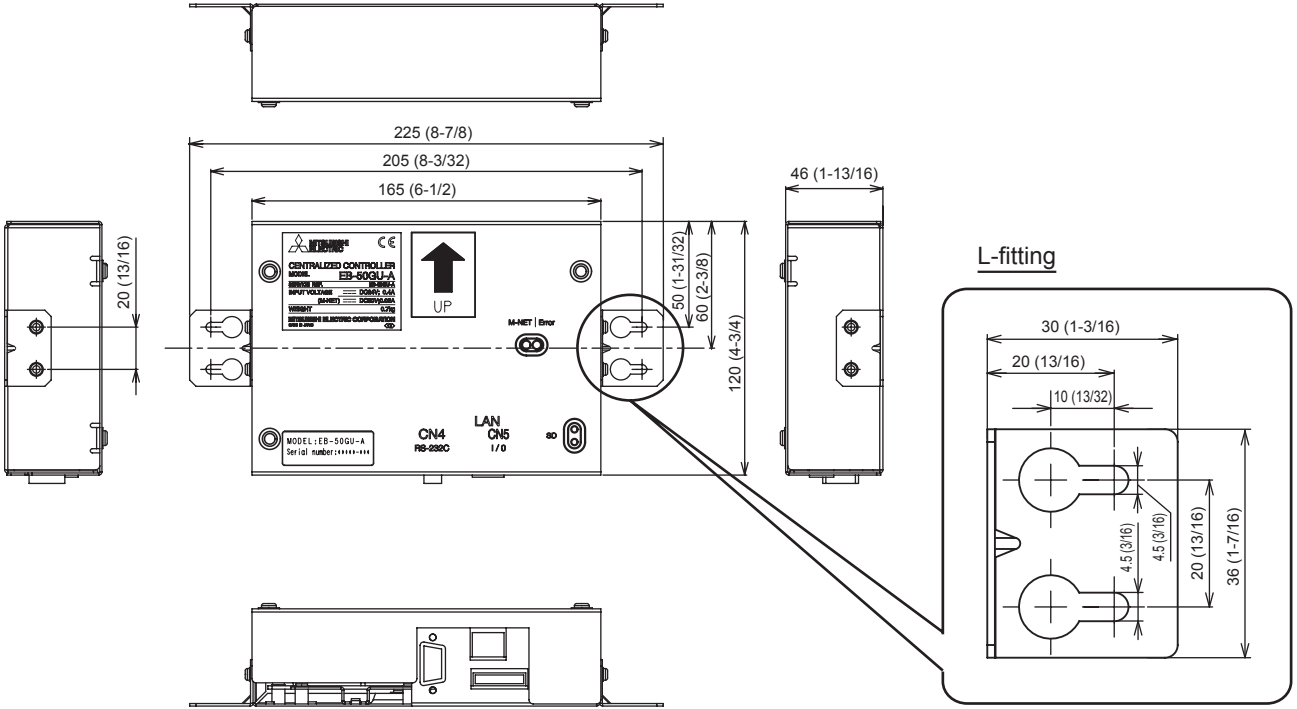


Fig. 3-1

# 4. System configuration

The figure below only shows the transmission cable connections. Power cables are omitted.

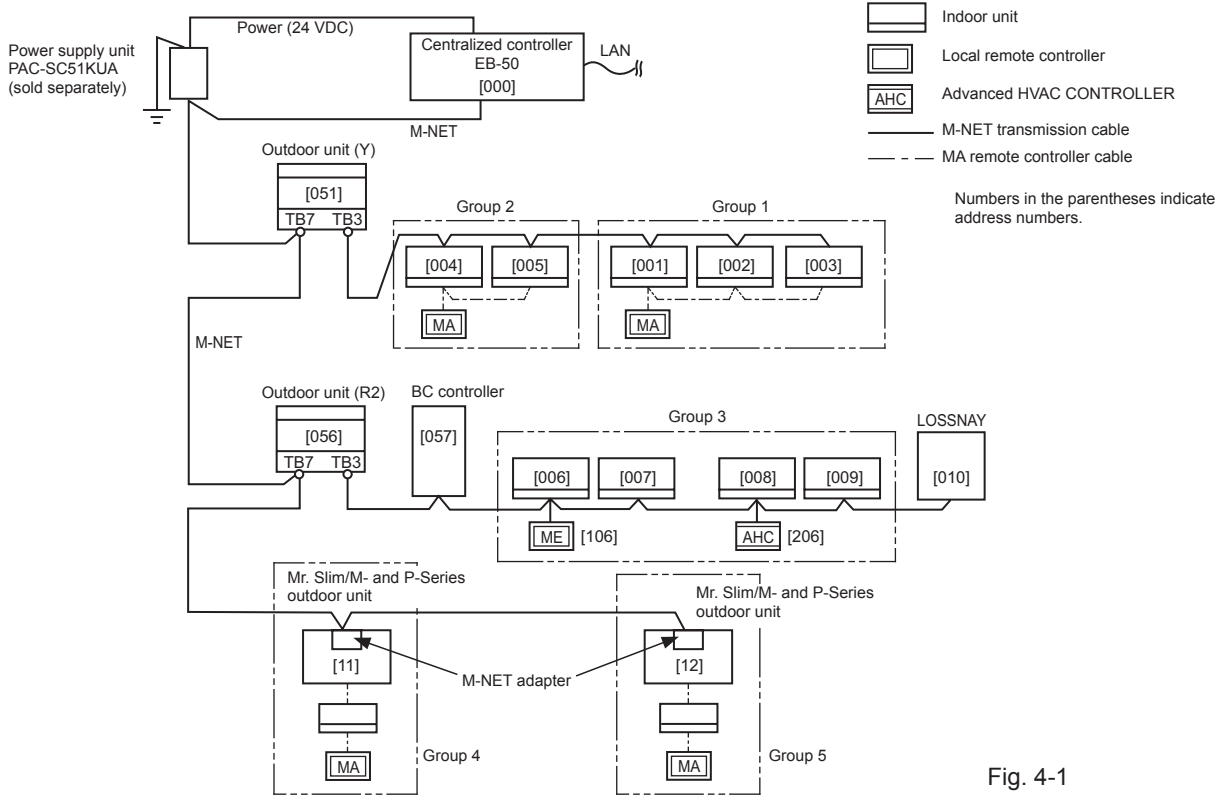


Fig. 4-1

**Note**

- Provide a single ground point by grounding the shield wire of the M-NET centralized controller transmission cable at the power supply unit. Provide a ground point for the indoor-outdoor transmission cable for each outdoor unit. (Provide the appropriate grounding according to the local standard.)
- Set the centralized control switch (SW2-1) on the outdoor unit connected to the M-NET transmission cable to ON.
- To prevent unauthorized access, always use a security device such as a VPN router when connecting the EB-50 to the Internet.
- When connecting BAC-HD150 (BM ADAPTER), AT-50, or GB-50ADA to the EB-50 in the same M-NET system, certain restrictions apply. Consult your dealer for details.

## 4-1. Number of connectable units

The table below summarizes the number of connectable units.

| Unit type | Number of connectable units |
|---|---|
| Indoor units, independent OA processing units, LOSSNAY units, DIDO controllers (PAC-YG66DCA), Air To Water (PWFY) units, Advanced HVAC CONTROLLERs in a system | Up to 50 units (including the interlocked LOSSNAY units)*1 |
| Indoor units, independent OA processing units, and LOSSNAY units in a group | 1–16 units<br>(Indoor units, independent OA processing units, and LOSSNAY units cannot be combined in one group.) |
| Remote controllers in a group | 1–2 units |
| System controllers in a group | 0–4 units (Up to four remote and system controllers combined can be assigned to each group.) |
| LOSSNAY unit that can be interlocked with each indoor unit | 1 unit |
| Indoor units that can be interlocked with each LOSSNAY unit | 1–16 units |

*1 The maximum number of controllable units varies, depending on the number of channels used for DIDO controller.

## 4-2. Setting M-NET address for various devices

Designate the address for each M-NET device. The addresses cannot be overlapped within the same M-NET system.

| | Address setting method | M-NET address |
|---|---|---|
| Indoor unit | Assign the lowest address to the main indoor unit in the group, and assign sequential addresses to the rest of the indoor units in the same group. | 1–50 |
| Outdoor unit | Assign an address that equals the lowest indoor unit address in the same refrigerant system plus 50. | 51–100 |
| Auxiliary outdoor unit (BC controller etc.) | Assign an address that equals the address of the outdoor unit in the same refrigerant system plus 1. | 52–100 |
| OA processing unit/ LOSSNAY unit | Assign an arbitrary but unused address to each of these units after assigning an address to all indoor units. | 1–50 |
| Air To Water (PWFY) unit | Assign the lowest address to the main Air To Water (PWFY) unit in the group, and assign sequential addresses to the rest of the Air To Water (PWFY) units in the same group. | 1–50 |
| Mr. Slim/M- and P-Series outdoor unit | Make the settings in the same way as with the indoor units. Requires PAC-SF81MA-E (sold separately). | 1–50 |
| Room air conditioner | Make the settings in the same way as with the indoor units. Requires MAC-333IF-E/MAC-399IF-E (sold separately). | 1–50 |
| M-NET remote controller | Assign an address that equals the address of the main indoor unit with the lowest address in the group plus 100. Add 150 in stead of 100 to set the address for a sub remote controller. | 101–200 |
| MA remote controller | Address setting is not required. Connection of two remote controllers requires the Main/Sub setting for each controller to be made. | – |

| | Address setting method | M-NET address |
|---|---|---|
| Sub system controller | Assign an address that equals the group number of the smallest controlled group plus 200. | 201–250 |
| Advanced HVAC CONTROLLER | Assign an address that equals the address of the main indoor unit with the lowest address in the group plus 200.<br>If the address overlaps with the Sub system controller's address, assign an arbitrary but unused address between 201 and 250 to the Advanced HVAC CONTROLLER. | 201–250 |
| DIDO controller (PAC-YG66DCA) | Assign an arbitrary but unused address to the controller after completing the address setting for the units with an address between 1 and 50. The number of controllable units varies with the number of channels used. | 1–50 |
| PI controller (PAC-YG60MCA) | Assign an arbitrary but unused address to the controller after completing the address setting for the units with an address between 1 and 50. | 1–50 |
| AI controller (PAC-YG63MCA) | Assign an arbitrary but unused address to the controller after completing the address setting for the units with an address between 1 and 50. | 1–50 |

* Some models of the units listed in the table above cannot be controlled from EB-50.

## [Main and Sub system controllers (M-NET)]

Each group can be controlled by a Main system controller or a Sub system controller.
EB-50 is exclusively for use as a Main system controller and cannot be used as a Sub system controller.

Main system controller

Main system controller refers to a system controller that controls all other system controllers including the units they control. If a given system has only one system controller, that controller becomes a Main system controller. Group settings and interlock settings can be made only from a Main system controller.

Sub system controller

Sub system controller refers to a system controller that is controlled by a Main system controller.

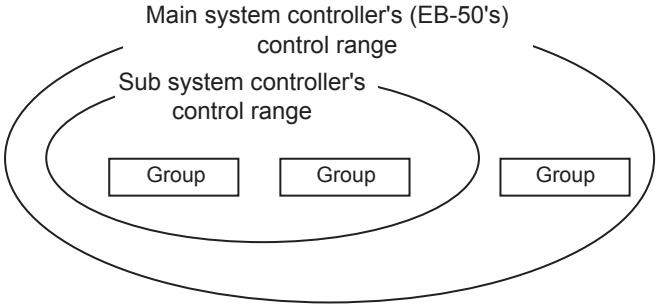

**The system cannot be configured as shown in the examples below.**

- Groups that are not under the control of a Main system controller cannot be controlled from a Sub system controller.

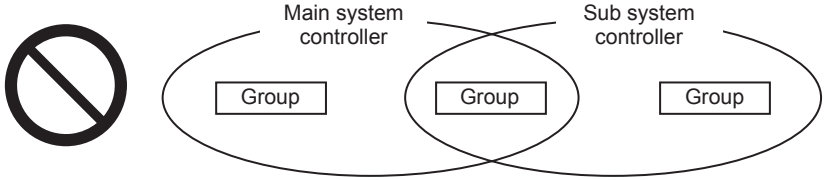


- Each group cannot be placed under the control of two or more Main system controllers.

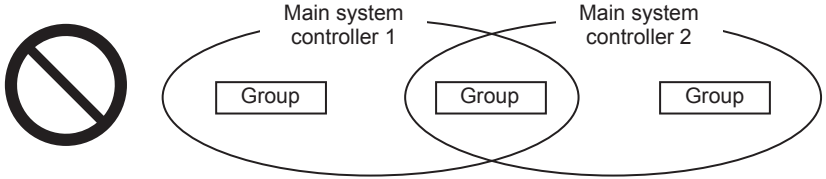


- Sub system controllers cannot be placed under the control of two or more Main system controllers.

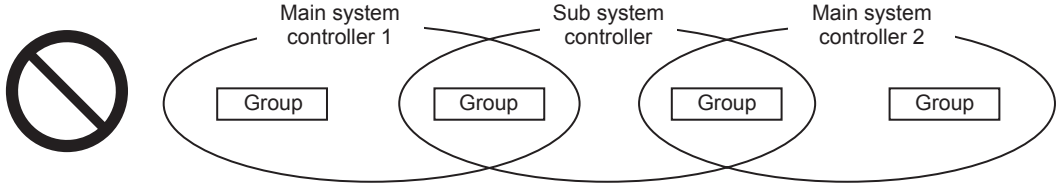

## 4-3. M-NET system setting example

### (1) Setting example for connecting multiple M-NET system controllers

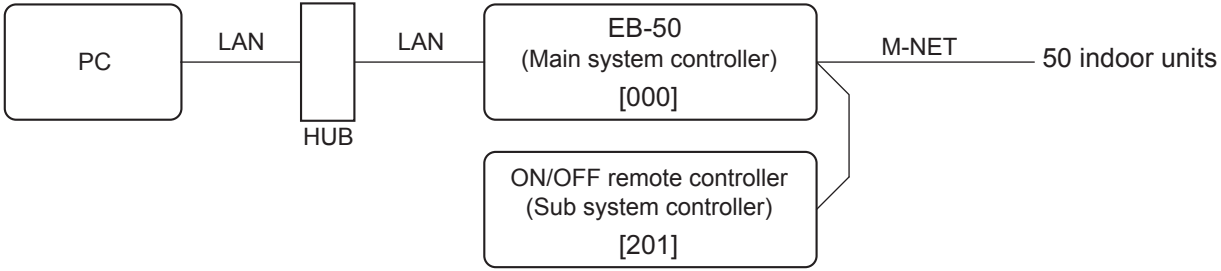


- Make the initial settings such as group settings and interlock settings on the Web browser. Refer to the Instruction Book (Web Browser for Initial Settings) for details.
- Designate a system controller within the system as the only controller from which operation prohibit setting can be made.

### (2) Setting example for controlling Mr. Slim units (A-control models)

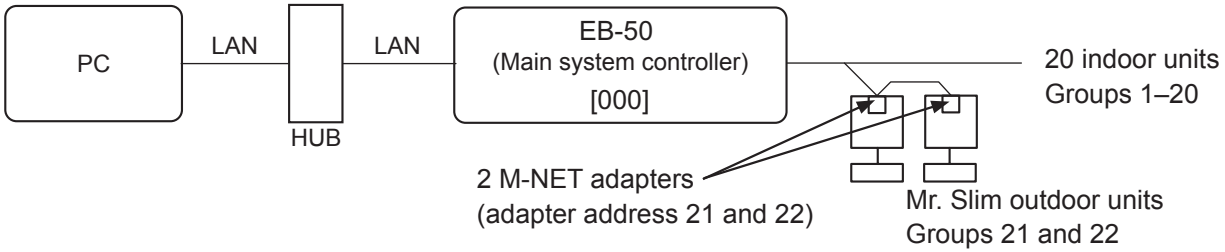


● An M-NET adapter (sold separately) is required to connect the Mr. Slim model of units to the M-NET.

# 5. Installation

## 5-1. Field-supplied items

The following items are required to install the EB-50.

| Field-supplied items | Specifications |
|---|---|
| Unit fixing screw<br>(required when using L-fittings) | M4 x 4 pcs. |
| DIN rail and fixing screw<br>(required when using DIN rails) | DIN rail width: 35 mm (1-13/32 in)<br>Applicable type (IEC 60715/DIN 60715): TH35-7.5Fe, TH35-7.5Al |
| Protective ground wire | Type: Sheathed vinyl wire (should not be lighter than ordinary PVC sheathed flexible cord IEC 60227.)<br>(designation 60227 IEC 53)<br>Size: Min. 0.75 mm² (Min. AWG 18)<br>Color: green/yellow<br>* Use a wire with an appropriate diameter so that the wire can be fixed with the cable strap below the terminal block. A diameter of 10 mm is recommended. |
| Sleeved ring terminal | M3.5 ring terminal (for power cables (+V, -V) and M-NET transmission cables (A, B, S))<br>M4 ring terminal (for protective ground wire) |
| Transmission cable | Type: Sheathed vinyl cable<br>● CPEVS ø1.2 mm<br>● CVVS Min. 1.25 mm² (Min. AWG 16)<br>* CPEVS: PE*1 insulated PVC*1 jacketed shielded communication cable<br>* CVVS: PVC*1 insulated PVC*1 jacketed shielded control cable<br>* Use cables with an appropriate diameter so that the cables can be fixed with the cable strap below the terminal block. A diameter of 10 mm is recommended. |

| Field-supplied items | Specifications |
|---|---|
| DC power cable | Must comply with the local standards and the power requirement of EB-50.<br>Recommended type: Min. 0.75 mm² (Min. AWG 18), 2-conductor power cable<br>Length: Max. 50 m (164 ft)<br>* Use cables with an appropriate diameter so that the cables can be fixed with the cable strap below the terminal block. A diameter of 10 mm is recommended. |
| LAN cable | Category 5 or above straight cable (Max. 100 m (328 ft)) |
| Switching HUB | The communication speed of 100 Mbps or faster is recommended. |

*1 PE: Polyethylene, PVC: Polyvinyl chloride

## 5-2. M-NET transmission cable length

Observe the maximum total length of M-NET transmission cables to ensure proper signal transmission to and from the connected equipment over the M-NET transmission cables. If the maximum total length is exceeded, the M-NET signals will be attenuated, resulting in communication error and control failure.

- **Maximum total length of M-NET transmission cables: 500 m (1640 ft)**
- **Maximum total length of power feed: 200 m (656 ft)**

<Example>

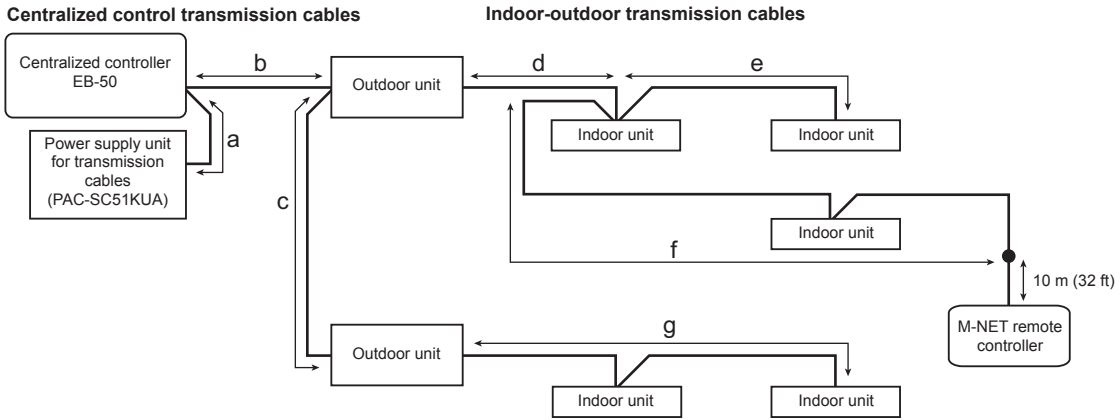

(1) Maximum total length of M-NET transmission cables

| | |
|---|---|
| a + b + d + e (f) | ≤ 500 m (1640 ft) |
| a + b + c + g | ≤ 500 m (1640 ft) |
| e (f) + d + c + g | ≤ 500 m (1640 ft) |

(2) Maximum total length of power feed for the indoor-outdoor transmission cables

| | |
|---|---|
| g | ≤ 200 m (656 ft) |
| d + e (f) | ≤ 200 m (656 ft) |

(3) Maximum total length of power feed for the centralized control transmission cables

| | |
|---|---|
| a + b | ≤ 200 m (656 ft) |
| a + b + c | ≤ 200 m (656 ft) |

**Note**

- The M-NET remote controller cable length should be 10 m (32 ft) or shorter. The length that exceeds 10 m (32 ft) needs to be included in the maximum total length of M-NET transmission cables (500 m (1640 ft)) and in the maximum total length of power feed (200 m (656 ft)).
- If the M-NET remote controller cable is shorter than 10 m (32 ft), the length does not need to be included in the maximum total length.

## 5-3. Installation

The EB-50 must be installed inside the metal control box.
Either the supplied L-fittings or DIN rail attachments can be used for the installation.

To reduce the risk of shorting, current leakage, electric shock, malfunctions, smoke, or fire, do not install the controller in a place exposed to water or in a condensing environment.

To prevent injury, install the controller on a flat surface strong enough to support its weight.

To reduce the risk of electric shock, malfunctions, or fire, seal the gap between the cable access holes with putty.

Do not install the controller on the panel door of the metal control box.
Vibrations or shocks to the controller may damage the controller or cause the controller to fall.

<Installation space>
Leave a space around the EB-50 as shown in the figure below.

Unit: mm (in)

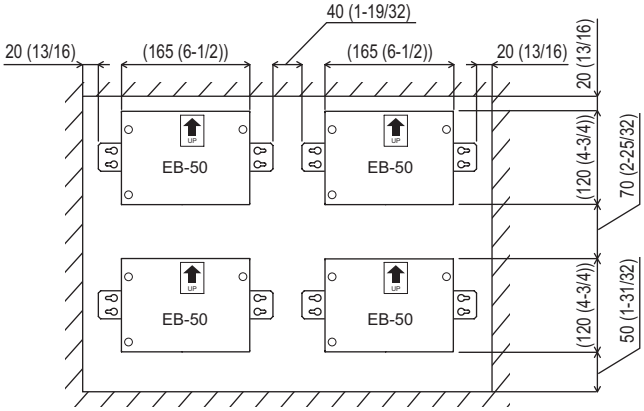


Fig. 5-1 When using L-fittings

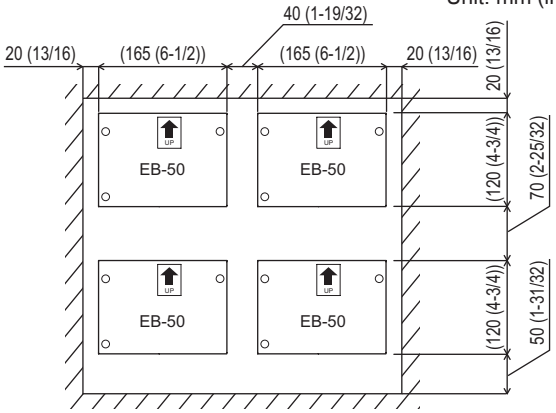


Fig. 5-2 When using DIN rail

## Method 1: Installation using L-fittings

1. Have a metal control box ready. (Minimum steel thickness: 1 mm (3/64 in))
2. Attach the supplied two L-fittings to the EB-50 with the supplied M3 screws. (Fig. 5-3)
3. Properly install the EB-50 with the M4 screws (field-supplied) horizontally inside the metal control box (Fig. 5-3), taking into consideration the installation space (Fig. 5-1).

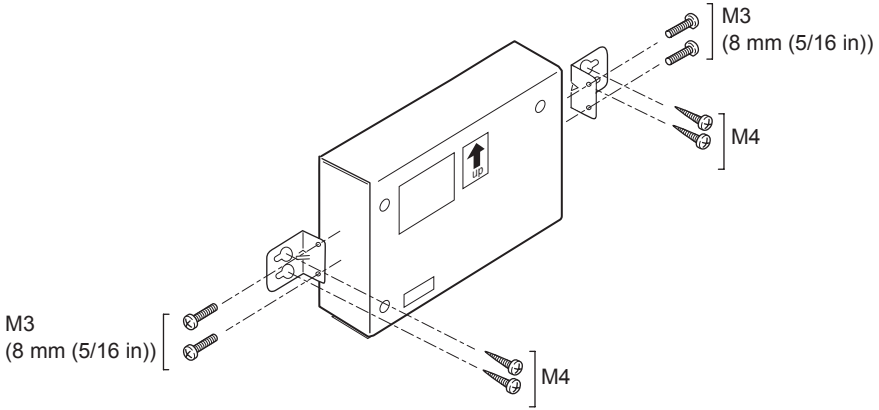


Fig. 5-3

**Note**

- Each L-fitting must be attached to the EB-50 with two M3 screws.
- The EB-50 to which the L-fittings are attached must be fixed to the metal control box with total of four M4 screws to prevent it from falling.
- The surface on which the EB-50 will be installed needs to be strong enough to support its weight (1.0 kg (3 lbs) each).

## Method 2: Installation using DIN rail

1. Have a metal control box ready. (Minimum steel thickness: 1 mm (3/64 in))
2. Attach the supplied two DIN rail attachments to the EB-50 with the supplied M3 screws. (Fig. 5-4)
3. Properly mount the EB-50 on the DIN rail vertically (Fig. 5-5 and Fig. 5-6), taking into consideration the installation space (Fig. 5-2).

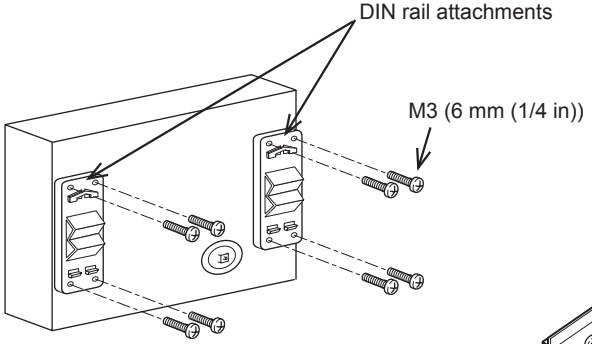


Fig. 5-4

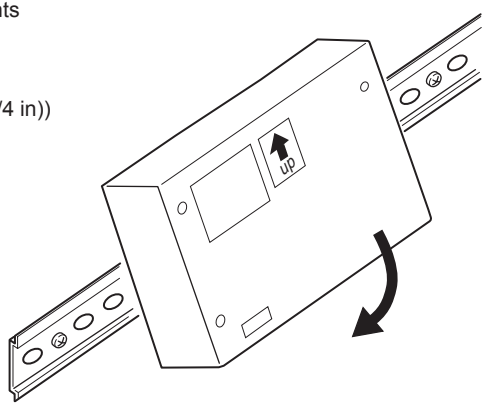


Fig. 5-5

**Note**

- Each DIN rail attachment must be fixed to the EB-50 with four M3 screws.
- To secure the strength, the screw pitch must be 200 mm (7-7/8 in) or less when DIN rail is mounted to the metal control box.
- The surface on which the EB-50 will be installed needs to be strong enough to support its weight (1.0 kg (3 lbs) each).
- Do not install the EB-50 where it may receive vibration. Use studs to fix the EB-50 as necessary.

**[Mounting/removing the EB-50 on/from the DIN rail]**

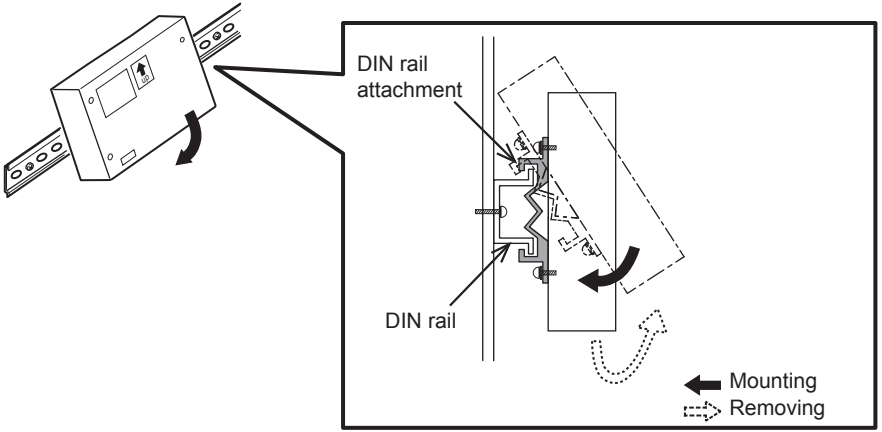


Fig. 5-6

(1) Mounting

1. Hook the upper side of the attachments to the DIN rail.
2. Push the lower part of the EB-50 until it snaps into place.

**Note**

- Ensure that the DIN rail attachments are fixed securely in place to the DIN rail.

(2) Removing

1. Push the EB-50 downwards.
2. Pull it up toward you.

# 6. Wiring connections

To reduce the risk of injury or electric shock, switch off the main power before performing electrical work.

To reduce the risk of damage to the controller, malfunctions, smoke, or fire, do not connect the power cable to the signal terminal block.

All electric work must be performed by a qualified electrician according to the local regulations, standards, and the instructions detailed in this manual.
Capacity shortage to the power supply circuit or improper installation may result in malfunction, electric shock, smoke, or fire.

**IMPORTANT**

- To avoid damage to the controller, do not connect an AC power cable to the terminal block.
- Be careful not to injure your hands with sharp edges of the controller cover.

## 6-1. Removing the cover to access the wiring

Unscrew the three screws on the cover to remove it as shown in the figure below.

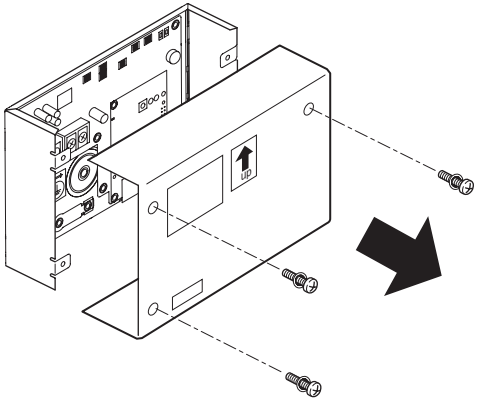


Fig. 6-1

## 6-2. Connecting protective ground wire

Connect an M4 ring terminal to the protective ground wire, and connect it to the ground terminal as shown in Fig. 6-2.

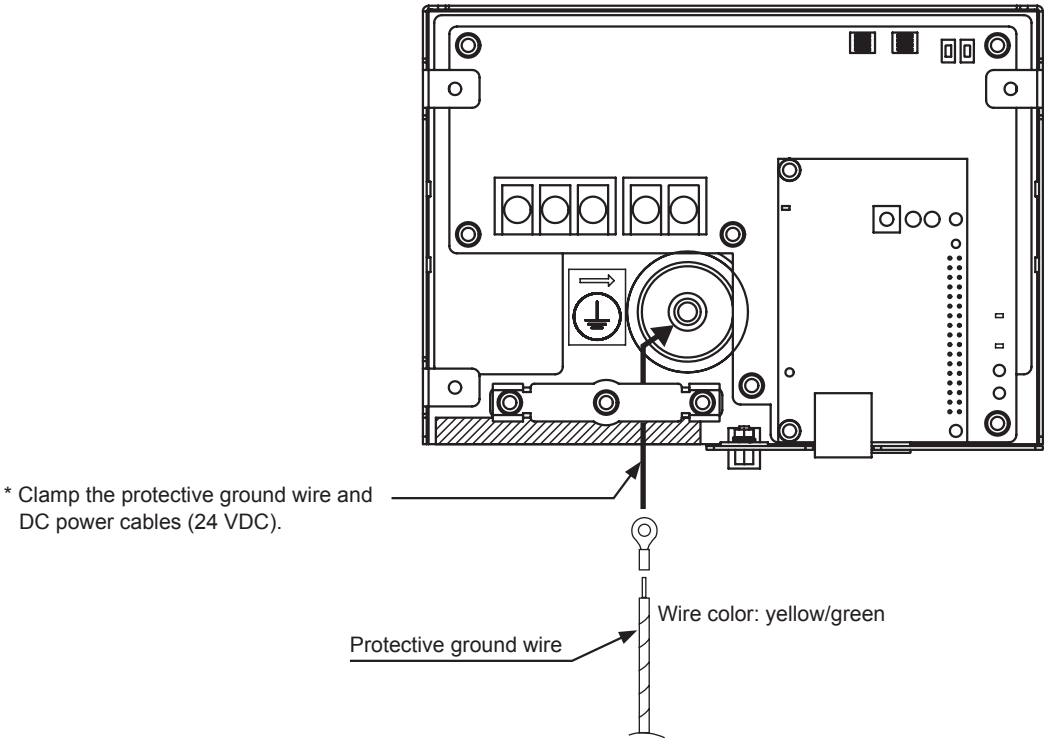


Fig. 6-2

## 6-3. Connecting M-NET transmission cables and DC power cables (24 VDC)

Connect the M-NET transmission cables and DC power cables (24 VDC) as shown in Fig. 6-3.
(M-NET transmission cables A and B: Non-polarized; S: Shield)
Be sure to use PAC-SC51KUA as a power supply unit.

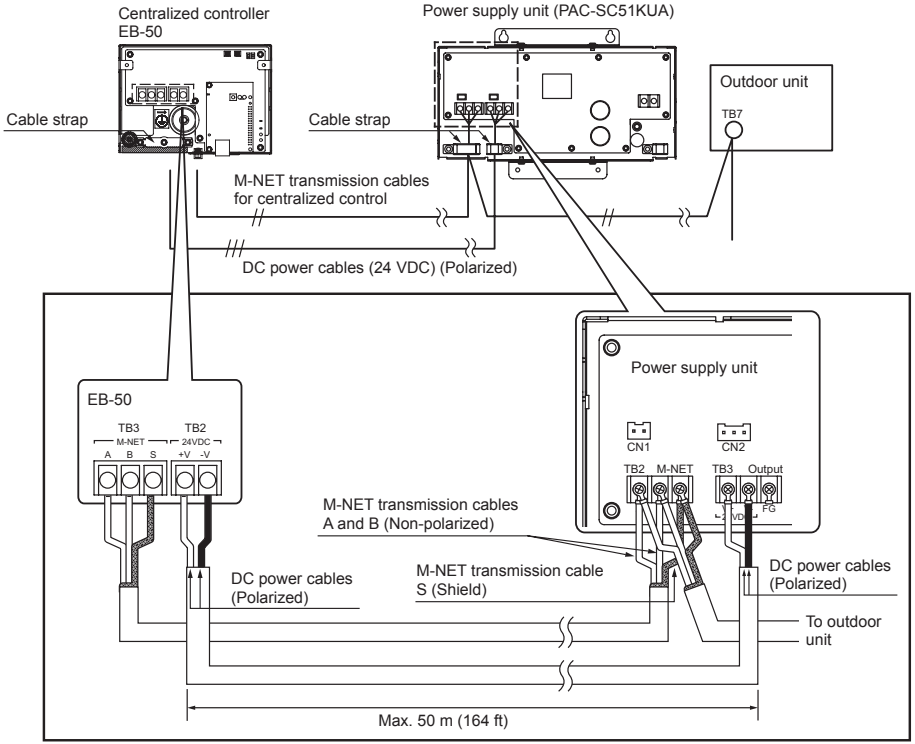


**Important**

**After connecting the cables, do not replace the label saying "Don't connect AC" on TB2 and TB3 .**

* Use M3.5 ring terminals to connect the cables to the terminal blocks.

Fig. 6-3

**Note**

- Connect the M-NET transmission cables to the centralized controller system side, and supply power to the M-NET from PAC-SC51KUA. (Leave the power jumpers on all the outdoor units as they are (connected to CN41 at factory shipment).)

## 6-4. Reinstalling the cover

Reinstall the cover using the three screws that were unscrewed.

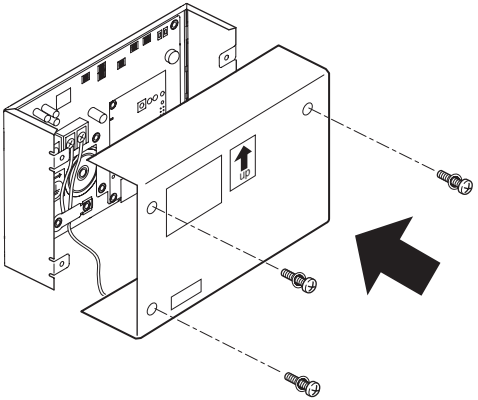

Fig. 6-4

## 6-5. Connecting LAN cable

Connect the LAN cable to the LAN port on the EB-50.

- The LAN cable is field supplied. Use a category 5 or above straight LAN cable.
- Use a switching HUB.
- The maximum distance between the switching HUB and EB-50 is 100 m (328 ft).

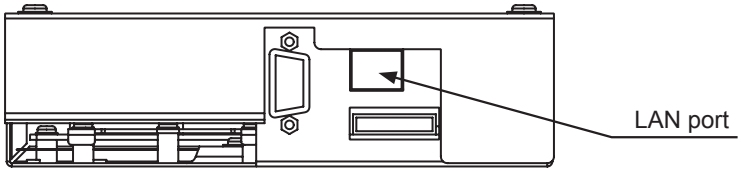


Fig. 6-5

**Note**

- LAN must be installed before the unit installation. Route the LAN cable to the EB-50 in the same way as the M-NET transmission cables.
- Leave enough space around the LAN port on the EB-50 to allow for the connection of the cables. Refer to section 5-3 "Installation."
- When connecting the EB-50 to an existing LAN, consult the system administrator to decide the IP address. Change the IP address setting before connecting the LAN cable to the LAN port.
- To prevent unauthorized access, always use a security device such as a VPN router when connecting the EB-50 to the Internet.

# 7. Initial settings

Initial settings need to be made for each EB-50 on the Web browser.
Details about the initial settings and other settings are covered in the Instruction Books (Web Browser for Initial Settings, Web Browser for System Maintenance Engineer).

The format in which the web page address for each EB-50 is expressed on the Web browser is shown below.

**http://[IP address of the EB-50]/init/administrator.html**

For example, if the IP address of the EB-50 is [192.168.1.1], the web page address is [http://192.168.1.1/init/administrator.html].

The web page will be displayed in the same language as the operating system on the PC.
The web page can be displayed in other languages by entering the web page address as follows:

Chinese: http://[IP address of the EB-50]/init/**zh**/administrator.html
English: http://[IP address of the EB-50]/init/**en**/administrator.html
French: http://[IP address of the EB-50]/init/**fr**/administrator.html
German: http://[IP address of the EB-50]/init/**de**/administrator.html
Italian: http://[IP address of the EB-50]/init/**it**/administrator.html
Japanese: http://[IP address of the EB-50]/init/**ja**/administrator.html
Portuguese: http://[IP address of the EB-50]/init/**pt**/administrator.html
Russian: http://[IP address of the EB-50]/init/**ru**/administrator.html
Spanish: http://[IP address of the EB-50]/init/**es**/administrator.html

Enter the following default maintenance user name and password in the log in screen.

| Default user name | Default password |
|---|---|
| initial | init |

**Initial settings on the Web browser**

| Settings | Details |
|---|---|
| Date and Time | Current date/time, daylight saving time |
| Basic System<br><br>[Default network settings]<br>IP address: 192.168.1.1<br>Subnet mask: 255.255.255.0<br>Gateway: 0.0.0.0 | Unit Settings, Network Settings (IP address*, Subnet mask, Gateway), Display format, System Configuration Settings (M-NET Settings, External Input Setting, Time Master/Sub)<br><br>* When connecting the EB-50 to a dedicated LAN, the IP address can be set with dipswitch SW851. Refer to section 7-1 "Quick IP address setting."<br>* When connecting the EB-50 to an existing LAN or the IP address cannot be set with dipswitch SW851, set the IP address on the Web browser. Refer to section 7-2 "Network settings on the Web browser." |
| Groups | Group name, unit registration |
| Interlocked LOSSNAY | Interlocked unit registration |
| Blocks | Block name, group registration |
| Functions | E-Mail, Peak Cut, Measurement, Set Temperature Range Limit, Night Mode Schedule, System-changeover, External Temperature Interlock, Night Setback Control, Interlock control, Energy Management Settings, AHC Port Name Settings |
| User Settings | Maintenance User, Building Manager |
| Utility | Back up/import settings data |
| License registration | License registration for optional functions |

## 7-1. Quick IP address setting

IP address can be easily set to an address between 192.168.1.1 and 192.168.1.15 with dipswitch SW851.
Set SW851 before turning on the power.

| No. | SW851 [0: OFF, 1: ON] | | | | IP address | Subnet mask | Gateway |
|---|---|---|---|---|---|---|---|
| | 1 | 2 | 3 | 4 | | | |
| 0 | 0 | 0 | 0 | 0 | Default 192.168.1.1 | Default 255.255.255.0 | Default 0.0.0.0 |
| 1 | 0 | 0 | 0 | 1 | 192.168.1.1 | 255.255.255.0 | 0.0.0.0 |
| 2 | 0 | 0 | 1 | 0 | 192.168.1.2 | | |
| 3 | 0 | 0 | 1 | 1 | 192.168.1.3 | | |
| 4 | 0 | 1 | 0 | 0 | 192.168.1.4 | | |
| 5 | 0 | 1 | 0 | 1 | 192.168.1.5 | | |
| 6 | 0 | 1 | 1 | 0 | 192.168.1.6 | | |
| 7 | 0 | 1 | 1 | 1 | 192.168.1.7 | | |
| 8 | 1 | 0 | 0 | 0 | 192.168.1.8 | | |
| 9 | 1 | 0 | 0 | 1 | 192.168.1.9 | | |
| 10 | 1 | 0 | 1 | 0 | 192.168.1.10 | | |
| 11 | 1 | 0 | 1 | 1 | 192.168.1.11 | | |
| 12 | 1 | 1 | 0 | 0 | 192.168.1.12 | | |
| 13 | 1 | 1 | 0 | 1 | 192.168.1.13 | | |
| 14 | 1 | 1 | 1 | 0 | 192.168.1.14 | | |
| 15 | 1 | 1 | 1 | 1 | 192.168.1.15 | | |

**Note**

- If you forget the EB-50 IP address, you can start EB-50 by changing the SW851 setting and temporarily using an arbitrary IP address. (It is recommended to paste a label with the IP address on the EB-50, so that the IP address is available at all times.)

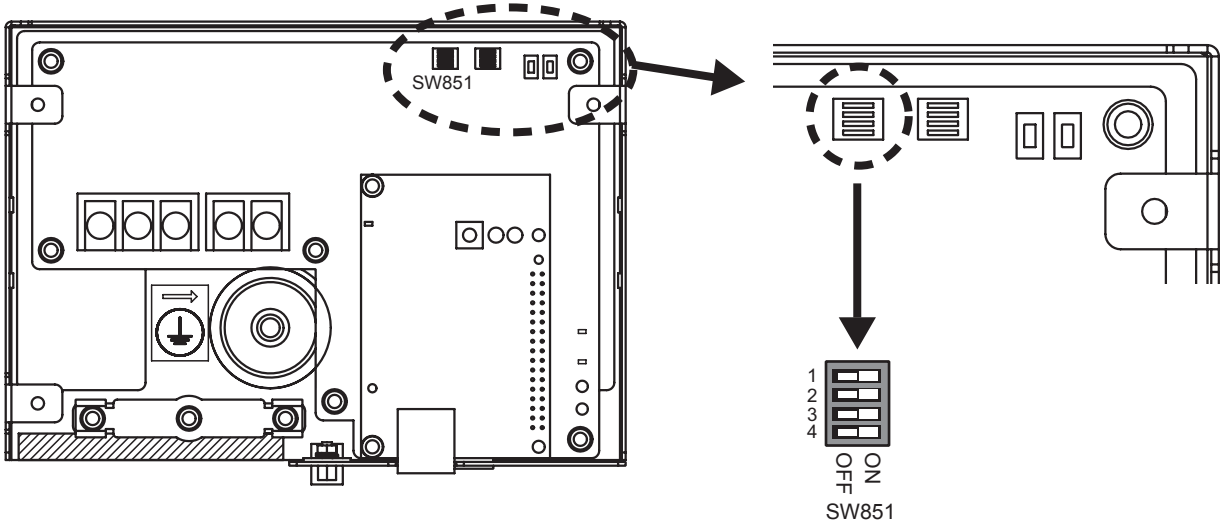


Fig. 7-1

## 7-2. Network settings on the Web browser

IP, subnet mask, and gateway addresses can be set on the Web browser. All the switches of SW851 must be set to OFF to make these settings.

When connecting the EB-50 to an existing LAN, consult the system administrator to decide the IP, subnet mask, and gateway addresses.

Refer to the Instruction Book (Web Browser for Initial Settings) for how to make these settings.

# 8. Test run

Confirm that the group settings and interlock settings are complete before performing a test run.

## 8-1. Collective operation ON/OFF

**Test run procedure**

1. Turn on the power to the EB-50 and all units. LED857 on the EB-50 turns on.
2. When LED857 turns off, press the Collective ON/OFF switch (SW853). The group of units will start an operation. When the group operation starts, LED858 turns on.
   * The equipment connected to DIDO controller cannot be operated.
3. Check for proper operation of each unit during the test run.
4. Press the Collective ON/OFF switch (SW853) to stop the units.

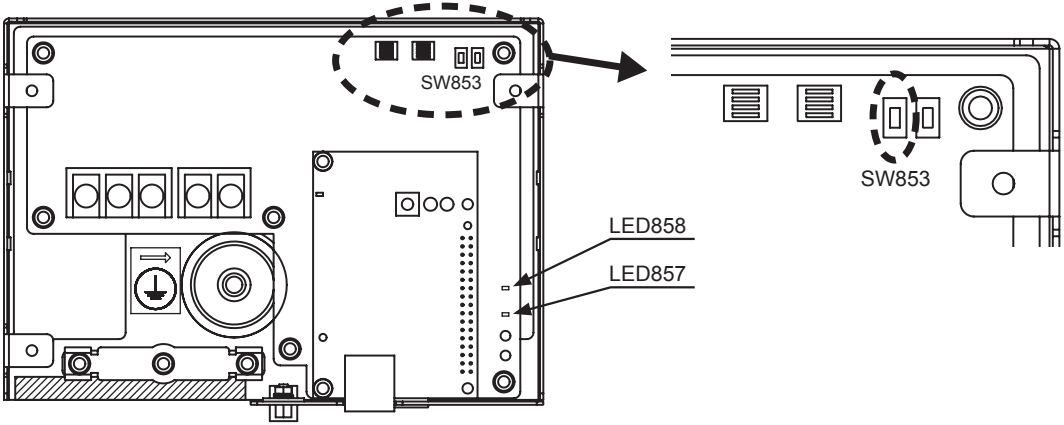


Fig. 8-1

**Note**

- The operation mode cannot be changed with Collective ON/OFF switch (SW853). The units will start operation in the currently selected operation mode.
- The operation mode other than the “Test run” mode can be selected on the Web browser. Refer to the Instruction Book (Web Browser for System Maintenance Engineer) for details.

## 8-2. Service LEDs

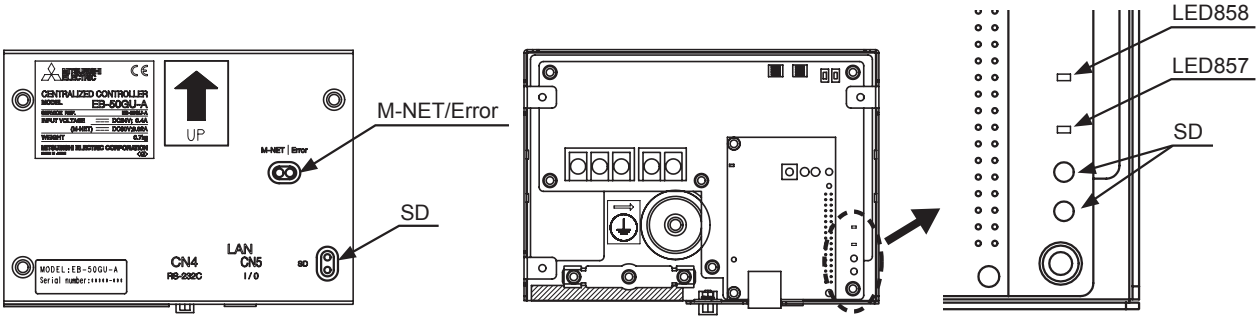


Fig. 8-2

| LED | Item | Color | Status | |
|---|---|---|---|---|
| M-NET | M-NET | Green | Lit | Powered |
| | | | Unlit | Not powered |
| | | | Blink | M-NET transmission in progress |
| Error | Error status | Red | Blink | One or more air conditioning units*1 are in error. |
| | | | Unlit | Normal |
| SD | SD card error status | Orange | Blink | The SD card may be damaged. |
| | | | Unlit | Normal |
| | SD card access | Green | Blink | Write-out/read-in process in progress |
| | | | Unlit | No access |
| LED857 | Start-up | Yellow | Lit | Starting-up |
| | | | Unlit | Start-up completed |
| LED858 | ON/OFF status*2 | Yellow | Lit | One or more air conditioning units are ON. |
| | | | Unlit | All air conditioning units are OFF. |

*1 Includes all the connected equipments.
*2 The ON/OFF status of the DIDO controller cannot be indicated.
* All the LEDs will light up for approximately one minute after startup.

**Note**

- When the LED for SD card error status is blinking, the microSD card installed on the EB-50 may be damaged.
  If the microSD card is damaged, consult your dealer for a replacement.
- Only a qualified technician should insert or remove the microSD card.

# 9. Product features

Any connected air conditioning systems can be operated or monitored on the EB-50 Web browser.
The table below summarizes the available functions and settings on EB-50. Refer to the Web browser instruction books (separate volume) for details.

| Function | | | Description |
|---|---|---|---|
| User's operation functions | Operation*1 | ON/OFF | The ON/OFF operation can be performed collectively or for each group or block. |
| | | Operation mode | The operation mode can be switched collectively or for each group or block. (The available operation modes depend on the unit model.) |
| | | Set temperature | The set temperature can be set collectively or for each group or block. (The available set temperatures depend on the unit model.) |
| | | Air direction | The air direction can be changed collectively or for each group or block. (The available air directions depend on the unit model.) |
| | | Fan speed | The fan speed can be changed collectively or for each group or block. (The number of available fan speeds depend on the unit model.) Auto mode is available only on the models that support Auto mode. |
| | | Interlocked ventilator (LOSSNAY) ON/OFF | Interlocked LOSSNAY units (if any) can be operated or stopped collectively or for each group or block. |
| | | Prohibition of local remote controller operation | Some operations or settings from the local remote controllers can be prohibited collectively or for each group or block. |
| | | Filter sign reset | Filter sign can be reset collectively or for each group or block. |
| | | Hold | The scheduled operations can be disabled. |
| | | Schedule*2 | Weekly, annual, and today's schedules can be set collectively or for each group or block. |

| Function | | | Description |
|---|---|---|---|
| User's operation functions | Operation*1 | Malfunction reset | Displayed error can be reset. |
| | | Clear malfunction log | Displayed unit errors and communication errors can be cleared. |
| | | External input | Inputs signals (Emergency stop, ON/OFF, Prohibit/Permit local remote controller operation) collectively from an external device. (A separately-sold external input/output adapter (PAC-YG10HA) and external power supply (12 or 24 VDC) are required.)<br>* General equipments connected via DIDO controller (PAC-YG66DCA) cannot be collectively run or stopped by using the external signal input function unless [Emergency Stop (Level signal)] is selected and relevant switches on the DIDO controller are set. |

| Function | | | Description |
|---|---|---|---|
| User's operation functions | Monitor*1 | Condition List | Displays the operation status of each group. |
| | | Prohibition of local remote controller operation | Displays the icon to indicate that the operation is prohibited by the EB-50 or other system controllers. |
| | | Measurement List | Displays the readings of the temperature sensor, humidity sensor, and metering device. |
| | | Malfunction List | Displays the address of the unit in error and error code. |
| | | Filter sign | Indicates that the filter on the unit in a given group is due for cleaning. |
| | | AHC List | Displays the input and output status of Advanced HVAC CONTROLLERs. |
| | | Free Contact List | Displays the ON/OFF status of the indoor unit free contact. |
| | | Malfunction Log | Displays unit errors and communication errors. |
| | | External output | Outputs signals (ON/OFF, Error) to an external device. (A separately-sold external input/output adapter (PAC-YG10HA) and external power supply (12 or 24 VDC) are required.)<br>* The operation status of general equipments (via DIDO controller (PAC-YG66DCA)) will not be output. |
| | | Energy Use Status*2 | Displays energy consumption and fan operation time of each indoor unit. |

| Function | | | Description |
|---|---|---|---|
| Initial settings | Operation*1 | Date and Time | Sets the current date/time and daylight savings time. |
| | | License registration | Registers license for optional functions. |
| | | Basic System | Sets unit name, unit ID, IP address, subnet mask, gateway, display format, M-NET address, range of prohibited controllers, external input setting, and advanced setting. |
| | | Groups | Registers air conditioning units, Air To Water (PWFY) units, LOSSNAY units, general equipments, remote controllers, and sub system controllers to a group. |
| | | Interlocked LOSSNAY | Interlocks the operation of indoor units and LOSSNAY units. |
| | | Blocks | Registers groups to a block. |
| Function settings | Functions 1 | E-Mail*2 | The e-mail server information, EB-50 e-mail information, and e-mail settings for the error notification e-mail function and e-mail communication function can be set. |
| | | Peak Cut*2 | The Peak Cut method and control settings for outdoor and indoor units can be set. |
| | | Measurement | AI and PI controllers, temperature sensor, humidity sensor, and metering device can be registered. The trend data format, error notification e-mail function settings, and e-mail alarm function settings can be set. |
| | | Energy Management Settings*2 | The settings related to energy-use-status display can be made. |

| Function | | | Description |
|---|---|---|---|
| Function settings | Functions 2 | Set Temperature Range Limit*1 | The settable temperature range can be set. |
| | | Night Mode Schedule | The start/end times for the Night mode (quiet operation) for outdoor units can be set. |
| | | System-changeover | This function switches the operation modes of the indoor units connected to the same outdoor unit between cooling and heating based on the room temperature and the set temperature. The target outdoor units and details for this function can be set. |
| | Functions 3 | External Temperature Interlock | This function adjusts the set temperature based on the temperature difference between the set temperature and the outdoor temperature. A maximum temperature value to be added to the set temperature can be set for each group. |
| | | Night Setback Control | This function performs cooling or heating operation when the room temperature goes outside of the specified temperature range. The start/end times and temperature range can be set for each group. |
| | | Interlock control*2 | Interlock control between the connected devices can be performed by making various settings. Up to 150 interlocking conditions can be set. |
| | | AHC Port Name Settings | The names of the AHC analog/digital input/output ports can be set. |
| User settings | User settings | Maintenance user | User name and password for maintenance users can be set. |
| | | Building manager | User name, password, and available functions to building managers can be set. |

| Function | | Description |
|---|---|---|
| Miscellaneous | Back up settings data | All settings data can be stored in the PC. |
| | Import settings data | Backed-up settings data can be restored from the PC. |
| | Time synchronization | Clocks on the controllers and the units that are under the control of the main system controller are synchronized once a day (applicable only to the ones that support this function). |

*1 The item and range that can be operated or monitored depend on the unit model.
*2 A separate license may be required to use the function.

# 10. External input/output

To use external input/output, a separately-sold external input/output adapter (PAC-YG10HA) and external power supply (12 or 24 VDC) are required.

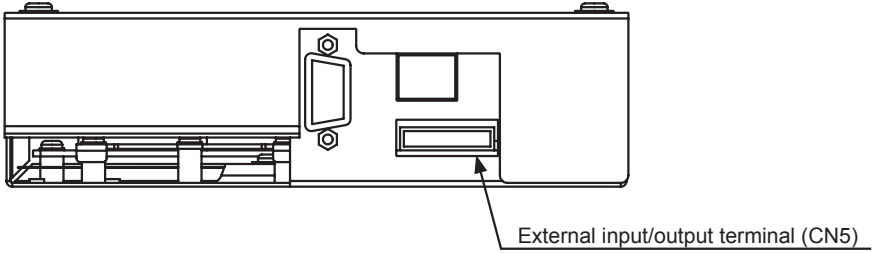


Fig. 10-1

## 10-1. External signal input function

Using external contact signals (12 or 24 VDC), the following collective operations for all connected air conditioning units can be controlled: Emergency stop, ON/OFF operation, and Prohibit/Permit local remote controller operation.

(1) External signal input function setting

| Setting mode | Description |
|---|---|
| Not in use<br>(Factory setting) | External input signal will not be used. |
| Emergency Stop (Level signal) | Using a level signal, all the air conditioning units connected to the EB-50 will be stopped collectively in emergency. During an emergency stop, the ON/OFF operation from the local remote controllers will be prohibited, and the ON/OFF operation and Prohibit/Permit settings on the EB-50 will be prohibited. |
| ON/OFF (Level signal) | Using a level signal, all the air conditioning units connected to the EB-50 will be run or stopped collectively. The ON/OFF operation from the local remote controllers will be prohibited, and the ON/OFF operation and Prohibit/Permit settings on the EB-50 will be prohibited. Scheduled operations will not be performed. |
| ON/OFF/Prohibit/Permit (Pulse signal) | Using a pulse signal, all the air conditioning units connected to the EB-50 will be run or stopped collectively, or the operation from the local remote controllers will be prohibited or permitted collectively. |

* General equipments connected via DIDO controller (PAC-YG66DCA) cannot be collectively run or stopped by using the external signal input function unless [Emergency Stop (Level signal)] is selected and relevant switches on the DIDO controller are set.

(2) External signal input specifications

| CN5 | Lead wire from PAC-YG10HA | Emergency Stop (Level signal) | ON/OFF (Level signal) | ON/OFF/Prohibit/Permit (Pulse signal) |
|---|---|---|---|---|
| No. 5 | Orange | Emergency stop signal, Normal operation signal | ON signal, OFF signal | ON signal |
| No. 6 | Yellow | – | – | OFF signal |
| No. 7 | Blue | – | – | Prohibit signal |
| No. 8 | Gray | – | – | Permit signal |
| No. 9 | Red | External power supply (+12 or +24 VDC) | | |

(3) Level signal and pulse signal

**(A) Level signal**

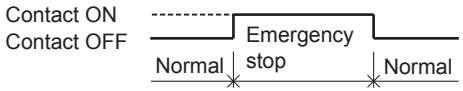


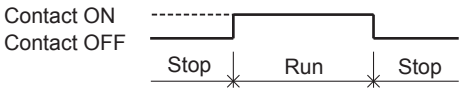


1. If “Emergency stop (Level signal)” is selected, the air conditioning units in normal operation will stop when the contact turns on. Even when the contact turns off, these units will remain stopped. They must be started up manually after the emergency stop is reset.
2. If "ON/OFF (Level signal)" is selected, the air conditioning units that are stopped will start operation when the contact turns on. Conversely, the units that are in operation will stop when the contact turns off.

### (B) Pulse signal

(Example) ON/OFF

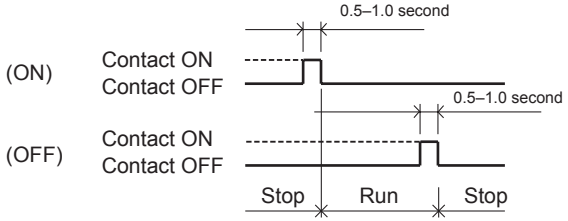


(Example) Prohibit/Permit

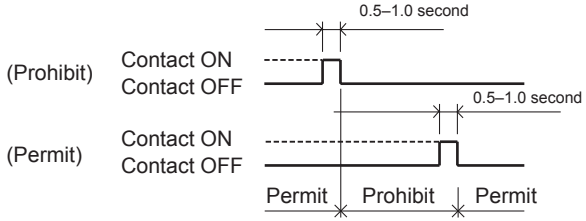


1. If input pulse signal is the same as the current operation status of the air conditioning units, no status change will occur. (For example, if an ON signal is input while the air conditioning units are in operation, the units will continue their operation.)
2. If the operation from the local remote controller is prohibited, ON/OFF status, operation mode, or temperature setting cannot be changed and filter sign cannot be reset from the local remote controller.
3. The pulse width (contact ON) should be between 0.5 and 1.0 second.

(4) Recommended circuit

**(A) Level signal**

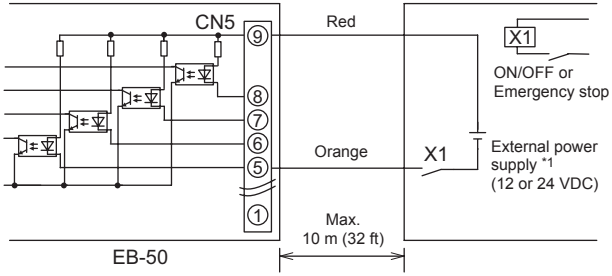


**(B) Pulse signal**

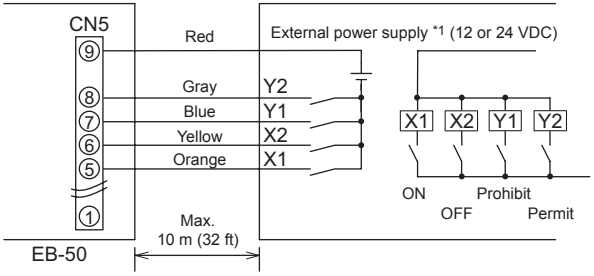


Use relays X1, X2, Y1, and Y2 that meet the following specifications.

Contact rating
Rated voltage: 12 VDC or above
Rated current: 0.1 A or above
Minimum applied load: DC 1 mA

*1 Select an external power supply suitable for the relays used. (12 or 24 VDC)
Connect the external power supply in the correct polarity to input and output the signals.
Connect ⑤–⑧ (see the figure at left) to the negative side.

**Important**

- **Be sure to use an external power supply (12 or 24 VDC) to avoid malfunctions.**
- **Connect the external power supply in the correct polarity to avoid malfunctions.**

**Note**

- The relays, external power supply, and extension cables are field supplied.
- The total length of the lead wire and extension cable should not exceed 10 m (32 ft). (Use an extension cable of 0.3 $mm^2$ or thicker.)
- Cut the excess cable near the connector, and insulate the end of unused cable with tape.

## 10-2. External signal output function

An ON signal is output when one or more units are in operation, and Error signal is output when one or more units are in error.

(1) External signal output specifications

| CN5 | Lead wire from PAC-YG10HA | Signal |
|---|---|---|
| No. 1 | Green | Common ground for external output (Ground for external power supply) |
| No. 2 | Black | ON signal*, OFF signal |
| No. 3 | Brown | Error signal, Normal signal |

* The operation status of general equipments (via DIDO controller (PAC-YG66DCA)) will not be output.
* The ON signal will be output even during an error.

(2) Recommended circuit

Relay-driven circuit

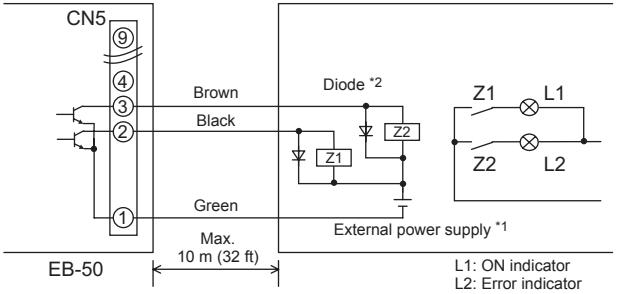


Use relays Z1 and Z2 that meet the following specifications.

Operation coil
Rated voltage: 12 or 24 VDC
Power consumption: Max. 0.9 W

*1 Select an external power supply suitable for the relays used. (12 or 24 VDC)
Connect the external power supply in the correct polarity to input and output the signals.
Connect ① (shown in the figure at left) to the negative side.

*2 Use a diode at both ends of the relay coils.

**Important**

- **Be sure to use an external power supply (12 or 24 VDC) to avoid malfunctions.**
- **Connect the external power supply in the correct polarity to avoid malfunctions.**
- **Do not connect the external power supply without relays being connected to the controller (no load).**

**Note**

- The relays, lamps, external power supply, diodes, and extension cables are field supplied.
- The total length of the lead wire and extension cable should not exceed 10 m (32 ft). (Use an extension cable of 0.3 $mm^2$ or thicker.)
- Each element will turn on during operation and when an error occurs.

# 11. Error code list

Error codes and their definitions are shown below. If an error occurs, note the error code and consult your dealer.
(A) indicates A-control units.

| | |
|---|---|
| 0100 | Equipment abnormality |
| 01*0 | Equipment abnormality (PAC-YG66DCA) in system * |
| 01** | Equipment abnormality in system ** |
| 0403 | Serial transmission trouble |
| 0404 | Indoor unit EEPROM error (A) |
| 0701 | Combustion circuit abnormality (A) |
| 0702 | Combustion heat exchange overheating protection (A) |
| 0703 | Accidental fire (A) |
| 0704 | Heater abnormality (A) |
| 0705 | Seismoscope malfunction (A) |
| 0706 | Flame current sensor abnormality (A) |
| 0707 | Ignition abnormality (A) |
| 0708 | Blower motor rotation abnormality (A) |
| 0709 | Oil pump circuit abnormality (A) |
| 0900 | Test run |
| 1000 | Refrigerant cycle abnormality |
| 10*0 | Refrigerant cycle abnormality in line * |
| 1102 | Discharge temperature abnormality (TH4) (A) |
| 1108 | Inner thermo (49C) operation (A) |
| 11** | Refrigerant cycle temperature abnormality - Common operand: ** |
| 1300 | Low-pressure abnormality (63L operation) (A) |
| 13** | Refrigerant cycle pressure abnormality - Common operand: ** |

| | |
|---|---|
| 1500 | Refrigerant cycle not operate due to overcharge |
| 1501 | Refrigerant cycle not operate due to undercharge (/compressor shell temperature abnormality) |
| 1502 | Refrigerant cycle not operate due to liquid back /Low-discharge super heat abnormality (A) |
| 1503 | Refrigerant cycle not operate due to coil frost |
| 1504 | Refrigerant cycle not operate due to overheat protection |
| 1505 | Refrigerant cycle not operate due to compressor vacuum operation protection/refrigerant low temperature abnormality |
| 1506 | Refrigerant cycle not operate due to refrigerant pump abnormality |
| 1507 | Refrigerant cycle not operate due to composition detection abnormality |
| 1508 | Refrigerant cycle not operate due to control valve fault |
| 1509 | Refrigerant cycle not operate due to high pressure abnormality (ball valve closed) |
| 1510 | Refrigerant cycle - Gas leakage |
| 1511 | Refrigerant cycle not operate due to oil slick abnormality |
| 1512 | Refrigerant cycle not operate due to a stop of freezing protection function |
| 1513 | Refrigerant cycle - Brine freezing |
| 1559 | Oil balance circuit abnormality |
| 2000 | Water system abnormality (Pump interlock abnormality) |
| 20*0 | Water system abnormality in line * |
| 21** | Water system temperature abnormality - Common operand: ** |
| 23** | Water system pressure abnormality - Common operand: ** |
| 2500 | Water system not operate due to water leak |
| 2501 | Water system not operate due to water supply suspension |
| 2502 | Water system not operate due to drain pump abnormality |
| 2503 | Water system not operate due to drain sensor abnormality/float switch function |
| 2504 | Water system not operate due to liquid level abnormality |
| 2505 | Water system not operate due to cool water valve abnormality |
| 2506 | Water system not operate due to warm water valve abnormality |

| | |
|---|---|
| 2507 | Water system not operate due to dew condensation prevention control activated |
| 2600 | Water system operation restricted due to water leak |
| 2601 | Water system operation restricted due to water supply suspension/humidifier water supply suspension |
| 2602 | Water system operation restricted due to drain pump abnormality |
| 2603 | Water system operation restricted due to drain sensor abnormality |
| 2604 | Water system operation restricted due to liquid level abnormality |
| 2613 | Drop in water flow rate |
| 3152 | Air system operation restricted due to inverter control box inner temperature abnormality |
| 3182 | Air system operation restricted due to housing inner temperature abnormality |
| 3600 | Air system operation restricted due to filter clogging |
| 3601 | Air system operation restricted due to filter maintenance |
| 3602 | Air system operation restricted due to damper position detecting abnormality |
| 37** | Air system operation humidity abnormality allowance - Common operand: ** |
| 38** | Air system operation humidity abnormality - Common operand: ** |
| 4000 | Electric system abnormality |
| 40*0 | Electric system abnormality in line * |
| 4100 | Electric system not operate due to overcurrent shut-off |
| 4101 | Electric system not operate due to overcurrent protection |
| 4102 | Electric system not operate due to open phase /Open phase (T phase) (A) |
| 4103 | Electric system not operate due to reversed phase/open phase |
| 4104 | Electric system not operate due to electric leak |
| 4105 | Electric system not operate due to short circuit |
| 4106 | Electric system not operate due to self power supply OFF/power failure |
| 4107 | Electric system not operate due to overload |
| 4108 | Electric system not operate due to overload protection/OCR51C /Open phase (S phase),51CM connector open (A) |
| 4109 | Electric system not operate due to OCR51F |

| | |
|---|---|
| 4110 | Electric system not operate due to high voltage part |
| 4111 | Electric system not operate due to bus current |
| 4112 | Electric system not operate due to coil overheat 49°C |
| 4113 | Electric system not operate due to heater overheat |
| 4114 | Electric system not operate due to fan controller abnormality |
| 4115 | Electric system not operate due to power supply synchronism abnormality /Input circuit (board) failure |
| 4116 | Electric system not operate due to motor abnormality/speed abnormality |
| 4117 | Compressor self-protection function operation (A) |
| 4118 | Opposite phase detection circuit (board) failure (A) |
| 4119 | Open of 2 or more connectors (A) |
| 4121 | Electric system not operate due to trouble in equipment to which a measure against higher harmonics is taken |
| 4123 | Electric system not operate due to Inverter output error |
| 4124 | Electric system not operate due to damper abnormality |
| 4125 | Electric system - Rush-proof circuit abnormality |
| 4200 | Inverter abnormality |
| 420* | Inverter abnormality - Inverter No.: * |
| 4210 | Inverter overcurrent shut-off |
| 421* | Inverter overcurrent shut-off - Inverter No.: * |
| 4220 | Inverter bus voltage insufficiency / Voltage abnormality (A) |
| 422* | Inverter bus voltage insufficiency - Inverter No.: * |
| 4230 | Inverter radiating thermostat abnormality |
| 423* | Inverter radiating thermostat abnormality - Inverter No.: * |
| 4240 | Inverter overcurrent (overload) protection |
| 424* | Inverter overcurrent protection - Inverter No.: * |
| 4250 | Inverter IPM/bus voltage abnormality /Power module abnormality (A) |
| 425* | Inverter IPM abnormality * |

| | |
|---|---|
| 4260 | Inverter cooling fan trouble |
| 426* | Inverter cooling fan trouble - Inverter No.: * |
| 5000 | Sensor trouble |
| 50*0 | Sensor trouble in system * |
| 51** | Temperature sensor trouble - Sensor No.: ** |
| 5202 | Connector (63L) open (A) |
| 52** | Pressure sensor trouble - Sensor No.: ** |
| 5300 | Current sensor abnormality (A) |
| 53** | Current sensor trouble - Sensor No.: ** |
| 54** | Humidity sensor trouble - Sensor No.: ** |
| 55** | Gas sensor trouble - Sensor No.: ** |
| 56** | Air speed sensor trouble - Sensor No.: ** |
| 57** | Limit switch trouble - Switch No.: ** |
| 58** | Sensor trouble - Sensor No.: ** |
| 59** | Other sensors trouble - Sensor No.: ** |
| 6000 | System abnormality |
| 6101 | System not operate due to abnormality - With response frame |
| 6102 | No answer back |
| 6200 | Controller H/W abnormality |
| 6201 | E2PROM abnormality |
| 6202 | RTC abnormality |
| 6204 | External memory read/write error |
| 6205 | External memory cannot be written to any more. |
| 6500 | Communication error |
| 6600 | Communication error - Address duplicate |
| 6601 | Communication error - Polarity unsettled |

| | |
|---|---|
| 6602 | Communication error - Transmission processor hardware error |
| 6603 | Communication error - Transmission line busy |
| 6604 | Communication error - No ACK (06H) (communication circuit error) |
| 6605 | Communication error - No response frame |
| 6606 | Communication error - Transmission processor communication error |
| 6607 | Communication error - No ACK return |
| 6608 | Communication error - No return of response frame |
| 6609 | Communication error |
| 6610 | Communication error |
| 6700 | Communication error - K-transmission abnormality |
| 6701 | Communication error - K-transmission error |
| 6702 | Communication error - K-address duplicate |
| 6750 | Communication error - K abnormality code PO |
| 6751 | K abnormality - Room temperature thermistor abnormality |
| 6752 | K abnormality - Indoor coil thermistor abnormality, Condensation temperature sensor abnormality |
| 6753 | K abnormality - Transmit/receive error |
| 6754 | K abnormality - Drain sensor abnormality, Float switch function |
| 6755 | K abnormality - Drain pump abnormality |
| 6756 | K abnormality - Coil frost/overheat protection |
| 6757 | K abnormality - System error |
| 6758 | K abnormality - Outdoor unit trouble, Indoor/outdoor communication error |
| 6761 | K abnormality - Room temperature thermistor abnormality |
| 6762 | K abnormality - Indoor coil thermistor abnormality, Condensation temperature sensor abnormality |
| 6763 | K abnormality - Transmit/receive error |
| 6764 | K abnormality - Drain sensor abnormality |
| 6765 | K abnormality - Drain pump abnormality |

| | |
|---|---|
| 6766 | K abnormality - Coil frost/overheat protection |
| 6767 | K abnormality - Outdoor unit trouble - Indoor/outdoor communication error |
| 6771 | K abnormality - High pressure abnormality, Low pressure abnormality |
| 6772 | K abnormality - Inner thermostat function, Discharge temperature abnormality, Shell thermostat function, Overcurrent protection |
| 6773 | K abnormality - Radiator plate thermostat function |
| 6774 | K abnormality - Outdoor thermistor abnormality |
| 6775 | K abnormality - Pressure sensor abnormality, Indoor/outdoor communication error |
| 6776 | K abnormality - Overcurrent shut-off |
| 6777 | K abnormality - System error |
| 6778 | K abnormality - Normal |
| 6779 | K abnormality - Refrigerant overcharge, Abnormal voltage, Abnormal CT sensor |
| 6800 | Communication error - Other communication errors |
| 6801 | Communication error - V-control communication error |
| 6810 | Communication error - UR communication error |
| 6811 | Communication error - UR communication synchronism not recover |
| 6812 | Communication error - UR communication hardware error |
| 6813 | Communication error - UR communication status bit detection error |
| 6820 | Other communication errors |
| 6821 | Other communication errors - Transmission line busy |
| 6822 | Other communication errors - No communication ACK |
| 6823 | Other communication errors - No response command |
| 6824 | Other communication errors - Receive data error |
| 6830 | Communication error - MA communication refrigerant address double setting error |
| 6831 | Communication error - No MA communication reception error |
| 6832 | Communication error - MA communication synchronism not recover |

| | |
|---|---|
| 6833 | Communication error - MA communication transmission/reception hardware trouble |
| 6834 | Communication error - MA communication start bit detection error |
| 6840 | Communication error - A control no indoor/outdoor communication/reception abnormality |
| 6841 | Communication error - A control indoor/outdoor communication synchronization recovery abnormal |
| 6844 | Communication error - A control indoor/outdoor communication incorrect indoor/outdoor wiring connection, excessive number of indoor units (more than five units) |
| 6845 | Communication error - A control indoor/outdoor communication incorrect indoor/outdoor wiring connection (telecommunication, disconnection) |
| 6846 | Communication error - A control indoor/outdoor communication startup time exceeded |
| 7000 | System abnormality |
| 7100 | System abnormality - Total capacity error |
| 7101 | System abnormality - Capacity code error |
| 7102 | System abnormality - Connecting unit number excess |
| 7103 | System abnormality - Piping length setting error |
| 7104 | System abnormality - Floor height setting error |
| 7105 | System abnormality - Address setting over 254 |
| 7106 | System abnormality - Attribute setting error |
| 7107 | System abnormality - Distributor setting error |
| 7108 | System abnormality - Refrigerant system setting error |
| 7109 | System abnormality - Connection setting error |
| 7110 | System abnormality - Refrigerant system connection/connection data unsettled |
| 7111 | System abnormality - I/O connection equipment not connected/remote controller sensor abnormality |
| 7112 | System abnormality - I/O type setting error |
| 7113 | System abnormality - Equipment unsettled |
| 7116 | System abnormality - Replace non-wash setting error |
| 7117 | System abnormality - Model identification setting error |
| 7130 | System abnormality - Different unit model error |

| | |
|---|---|
| 7131 | System abnormality - Mixed cooling only H/P connection error (Facility PAC) |
| 7132 | System abnormality - Multiple entries of operation performance (Facility PAC) |
| 7200 | System abnormality - Numeric values unsettled |
| 7201 | System abnormality - Numeric values unsettled |
| 73** | System abnormality - LON system equipment abnormality |

**microSD and microSDHC Logos are trademarks of SD-3C, LLC.**

**Java is a registered trademark of Oracle and/or its affiliates.**

This equipment has been tested and found to comply with the limits for a Class B digital device, pursuant to Part 15 of the FCC Rules. These limits are designed to provide reasonable protection against harmful interference in a residential installation. This equipment generates, uses and can radiate radio frequency energy and, if not installed and used in accordance with the instructions, may cause harmful interference to radio communications.
However, there is no guarantee that interference will not occur in a particular installation.
If this equipment does cause harmful interference to radio or television reception, which can be determined by turning the equipment off and on, the user is encouraged to try to correct the interference by one or more of the following measures:

- Reorient or relocate the receiving antenna.
- Increase the separation between the equipment and receiver.
- Connect the equipment into an outlet on a circuit different from that to which the receiver is connected.
- Consult the dealer or an experienced radio/TV technician for help.

This product is designed and intended for use in the residential, commercial and light-industrial environment.

The product at hand is based on the following EU regulations:

- Electromagnetic Compatibility Directive 2004/108/EC
- Restriction of Hazardous Substances 2011/65/EU

Please be sure to put the contact address/telephone number
on this manual before handing it to the customer.


**MITSUBISHI ELECTRIC CORPORATION**

**HEAD OFFICE:** TOKYO BLDG., 2-7-3, MARUNOUCHI, CHIYODA-KU, TOKYO 100-8310, JAPAN



WT06533X01