Changes for the Better

MITSUBISHI ELECTRIC

SPLIT-TYPE, HEAT PUMP AIR CONDITIONERS
SPLIT-TYPE, AIR CONDITIONERS

Outdoor unit

November 2007

No.OCB429

PARTS CATALOG R410A

[model names]	[Service Ref.]
PUZ-A18NHA2	PUZ-A18NHA2
PUZ-A24NHA2	PUZ-A24NHA2
PUZ-A30NHA2	PUZ-A30NHA2
PUZ-A36NHA2	PUZ-A36NHA2
PUZ-A42NHA2	PUZ-A42NHA2
PUZ-A18NHA2-BS	PUZ-A18NHA2-BS
PUZ-A24NHA2-BS	PUZ-A24NHA2-BS
PUZ-A30NHA2-BS	PUZ-A30NHA2-BS
PUZ-A36NHA2-BS	PUZ-A36NHA2-BS
PUZ-A42NHA2-BS	PUZ-A42NHA2-BS
PUY-A12NHA2	PUY-A12NHA2
PUY-A18NHA2	PUY-A18NHA2
PUY-A24NHA2	PUY-A24NHA2
PUY-A30NHA2	PUY-A30NHA2
PUY-A36NHA2	PUY-A36NHA2
PUY-A42NHA2	PUY-A42NHA2
PUY-A12NHA2-BS	PUY-A12NHA2-BS
PUY-A18NHA2-BS	PUY-A18NHA2-BS
PUY-A24NHA2-BS	PUY-A24NHA2-BS
PUY-A30NHA2-BS	PUY-A30NHA2-BS
PUY-A36NHA2-BS	PUY-A36NHA2-BS
PUY-A42NHA2-BS	PUY-A42NHA2-BS

NOTE:
- This manual describes only service data of the outdoor units.
- RoHS compliant products have <G> mark on the spec name plate.
- For servicing RoHS compliant products, refer to the RoHS PARTS LIST.

CONTENTS

1. RoHS PARTS LIST ····· 2

SERVICE MANUAL (OCH429)

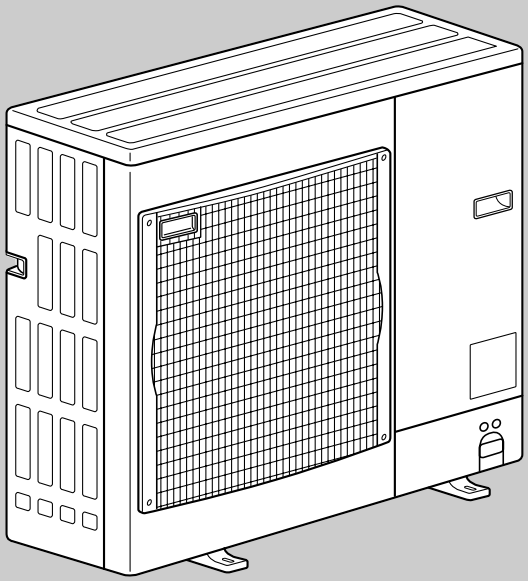

PUZ-A24/30/36NHA2
PUY-A24/30/36NHA2

INTERTEK C ETL LISTED US 33223

Mr.SLIM™

1 RoHS PARTS LIST (RoHS compliant)

FUNCTIONAL AND ELECTRICAL PARTS
PUZ-A18NHA2
PUZ-A18NHA2-BS
PUY-A12NHA2
PUY-A12NHA2-BS
PUY-A18NHA2
PUY-A18NHA2-BS

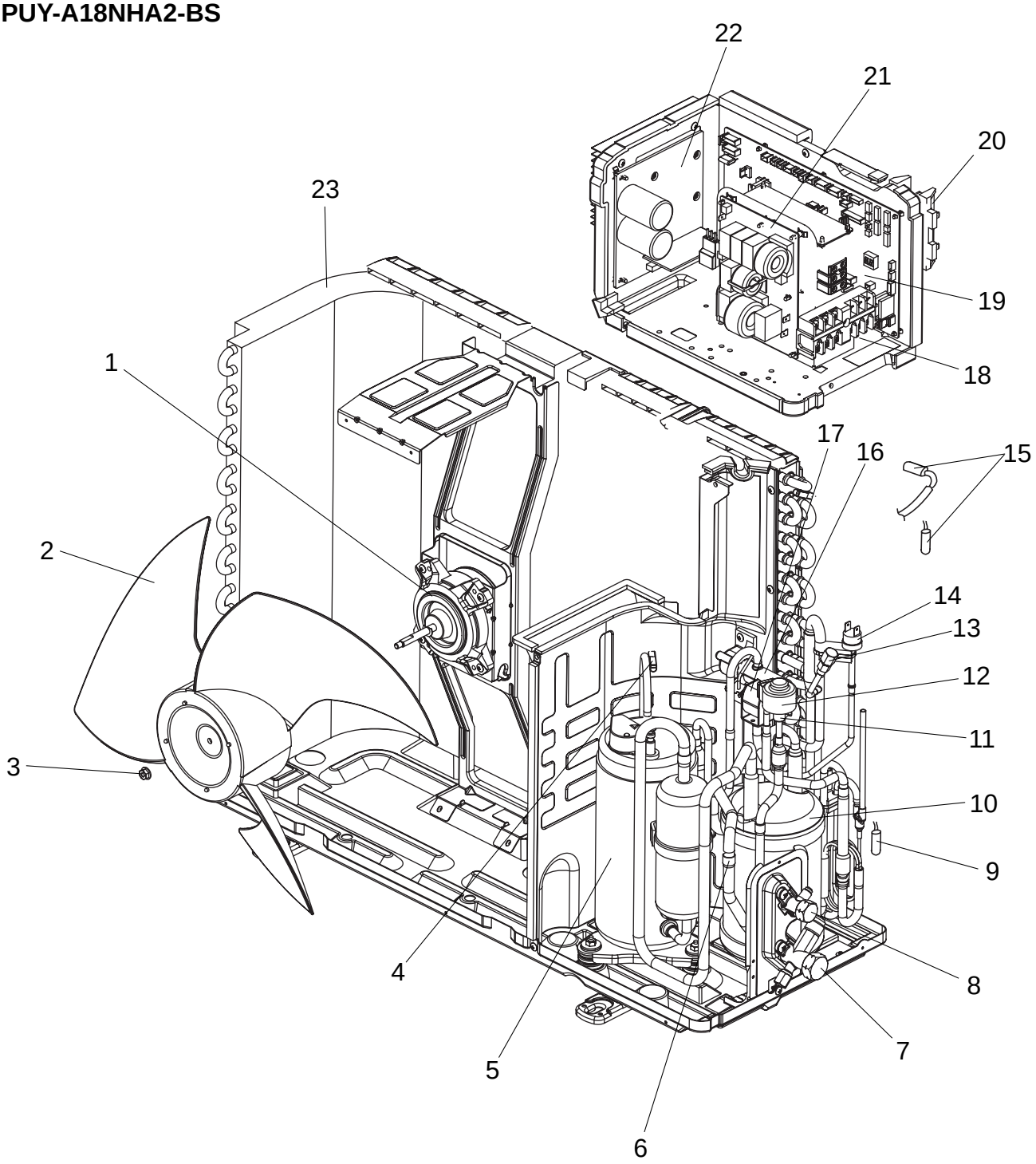

Part numbers that are circled are not shown in the figure.

No.	RoHS	Part No.	Part Name	Specification	Q'ty/set			Remarks (Drawing No.)	Wiring Diagram Symbol	Recom-mended Q'ty
					PUZ-A	PUY-A				
					18	12	18			
					NHA2 (-BS)	NHA2(-BS)				
1	G	R01 E47 221	FAN MOTOR		1	1	1		MF1	
2	G	R01 E07 115	PROPELLER FAN		1	1	1			
3	G	R01 E08 097	NUT		1	1	1			
4	G	R01 E13 201	THERMISTOR (DISCHARGE)		1	1	1		TH4	
5	G	T92 570 280	COMPRESSOR	SNB130FPBM1 Including RUBBER MOUNT	1	1	1		MC	
6	G	R01 31L 450	STRAINER		1	1	1			
7	G	T7W E03 410	STOP VALVE (GAS)	1/2	1	1	1			
8	G	R01 E10 411	STOP VALVE (LIQUID)	1/4	1	1	1			
9	G	R01 N01 202	THERMISTOR (OUTDOOR PIPE)			1			TH3	
	G	R01 E98 202	THERMISTOR (OUTDOOR PIPE)		1		1		TH3	
10	G	R01 E45 440	ACCUMULATOR		1	1	1			
11	G	R01 E75 401	EXPANSION VALVE		1	1	1			
12	G	R01 E36 242	LINEAR EXPANSION VALVE COIL		1	1	1		LEV-A	
13	G	R01 E12 413	CHARGE PLUG		1	1	1			
14	G	T7W E07 208	HIGH PRESSURE SWITCH		1	1	1		63H	
15	G	R01 E97 202	THERMISTOR (OUTDOOR 2-PHASE PIPE, OUTDOOR)		1	1	1		TH6,7	
16	G	R01 E30 403	4-WAY VALVE		1					
17	G	T7W E33 242	SOLENOID COIL (4-WAY VALVE)		1				21S4	
18	G	T7W E39 716	TERMINAL BLOCK	6P(L1,L2,GR,S1,S2,S3)	1	1	1		TB1	
19	G	T7W E60 315	CONTROLLER CIRCUIT BOARD		1	1	1		C.B.	
20	G	R01 E22 259	REACTOR		1	1	1		ACL	
21	G	T7W E20 346	NOISE FILTER		1	1	1		N.F.	
22	G	T7W E38 313	POWER CIRCUIT BOARD		1	1	1		P.B.	
23	G	T7W E35 408	HEAT EXCHANGER			1				
	G	R01 E88 408	HEAT EXCHANGER		1					
	G	T7W E28 408	HEAT EXCHANGER				1			
24	G	T7W E06 467	MUFFLER		1					
25	G	R01 E99 202	THERMISTOR (HEATSINK)		1	1	1		TH8	
26	G	R01 E06 239	FUSE	6.3A 250V	4	4	4		F1,2,3,4	

FUNCTIONAL PARTS
PUZ-A24/30/36NHA2 PUZ-A24/30/36NHA2-BS
PUY-A24/30/36NHA2 PUY-A24/30/36NHA2-BS

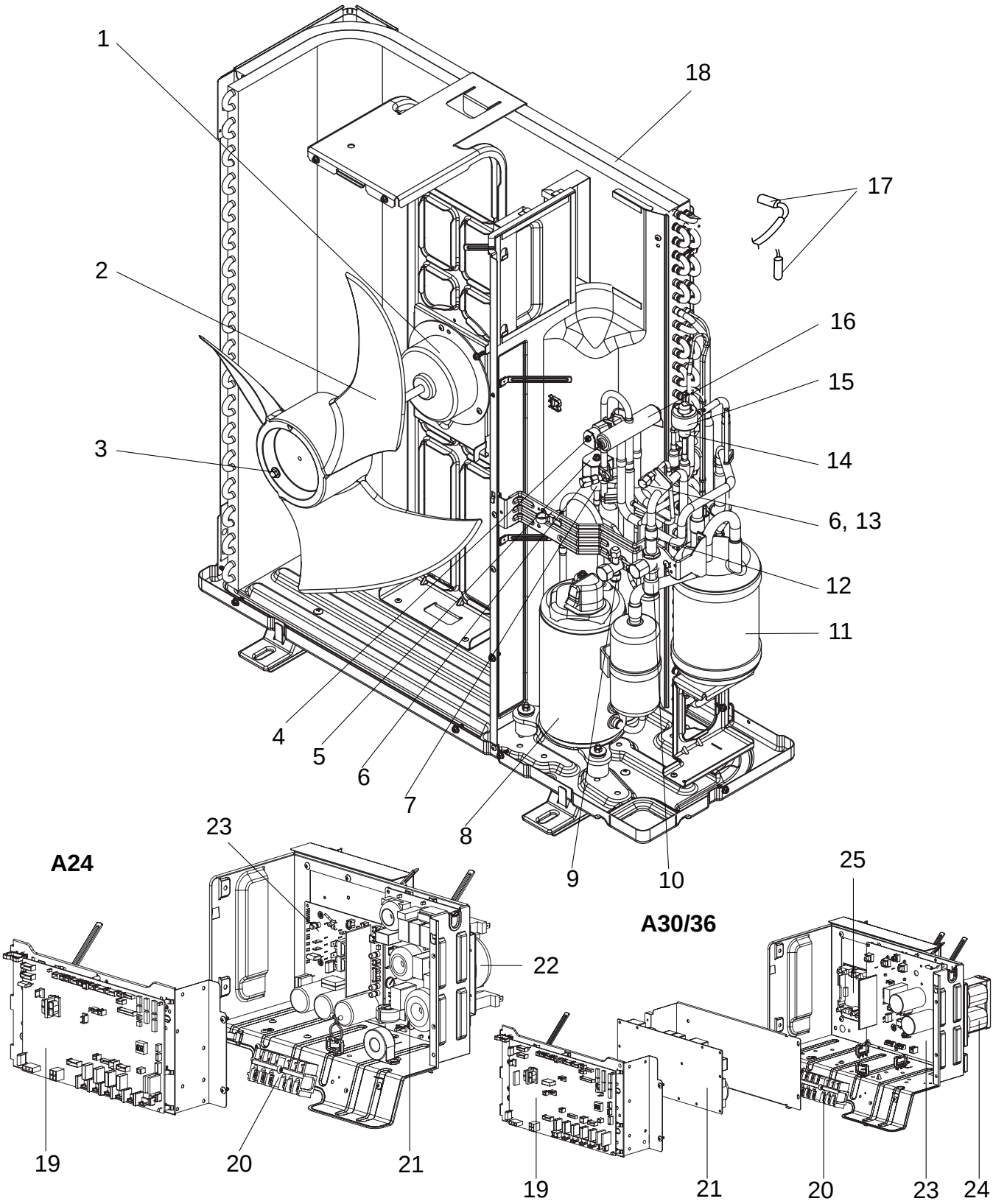

Part numbers that are circled are not shown in the figure.

No.	RoHS	Part No.	Part Name	Specification	Q'ty/set PUZ-A 24 NHA2(-BS)	PUZ-A 30,36 NHA2(-BS)	PUY-A 24 NHA2(-BS)	PUY-A 30,36 NHA2(-BS)	Remarks (Drawing No.)	Wiring Diagram Symbol	Recom-mended Q'ty
1	G	T7W E27 763	FAN MOTOR		1	1	1	1		MF1	
2	G	R01 E08 115	PROPELLER FAN		1	1	1	1			
3	G	R01 E09 097	NUT		1	1	1	1			
4	G	T7W E20 242	SOLENOID COIL <4-WAY VALVE>		1	1				21S4	
5	G	T7W E19 242	SOLENOID COIL <BYPASS VALVE>		1	1	1	1		SV	
6	G	R01 E12 413	CHARGE PLUG		2	2	1	1			
7	G	R01 E13 428	BYPASS VALVE		1	1	1	1			
8	G	T92 506 801	COMPRESSOR	TNB220FLDM Including RUBBER MOUNT	1	1	1	1		MC	
9	G	T7W E04 410	STOP VALVE	3/8	1	1	1	1			
10	G	R01 E12 411	BALL VALVE	5/8	1	1	1	1			
11	G	R01 E46 440	ACCUMULATOR		1	1	1	1			
12	G	R01 E06 450	STRAINER		1	1	1	1			
13	G	R01 E15 413	CHARGE PLUG				1	1			
14	G	R01 H22 401	EXPANSION VALVE		1	1	1	1			
15	G	R01 E50 242	LINEAR EXPANSION VALVE COIL		1	1	1	1		LEV-A	
16	G	R01 E28 403	4-WAY VALVE		1	1					
17	G	R01 E94 202	THERMISTOR (OUTDOOR 2-PHASE PIPE, OUTDOOR)		1	1	1	1		TH6,7	
18	G	T7W E36 408	HEAT EXCHANGER		1		1				
	G	T7W E37 408	HEAT EXCHANGER			1		1			
19	G	T7W E60 315	CONTROLLER CIRCUIT BOARD		1		1			C.B.	
	G	T7W E61 315	CONTROLLER CIRCUIT BOARD			1		1		C.B.	
20	G	T7W E40 716	TERMINAL BLOCK	6P(L1,L2,GR,S1,S2,S3)	1	1	1	1		TB1	
21	G	T7W E21 346	NOISE FILTER CIRCUIT BOARD		1		1			N.F.	
	G	R01 E18 346	NOISE FILTER CIRCUIT BOARD			1		1		N.F.	
22	G	R01 E33 259	REACTOR		1		1			ACL	
23	G	T7W E39 313	POWER CIRCUIT BOARD		1		1			P.B.	
	G	T7W E47 313	POWER CIRCUIT BOARD			1		1		P.B.	
24	G	R01 E20 259	REACTOR			1		1		DCL	
25	G	R01 E07 233	ACT MODULE			1		1		ACTM	
26	G	T7W E03 201	THERMISTOR (DISCHARGE)		1	1	1	1		TH4	
27	G	T7W E07 208	HIGH PRESSURE SWITCH		1	1	1	1		63H	
28	G	R01 E99 202	THERMISTOR (HEATSINK)		1	1	1	1		TH8	
29	G	T7W E04 467	MUFFLER		1	1					
30	G	R01 N03 202	THERMISTOR (OUTDOOR PIPE)		1		1			TH3	
	G	R01 N01 202	THERMISTOR (OUTDOOR PIPE)			1		1		TH3	
31	G	R01 E06 239	FUSE	6.3A 250V	4	4	4	4		F1,2,3,4	

FUNCTIONAL PARTS
PUZ-A42NHA2
PUZ-A42NHA2-BS
PUY-A42NHA2
PUY-A42NHA2-BS

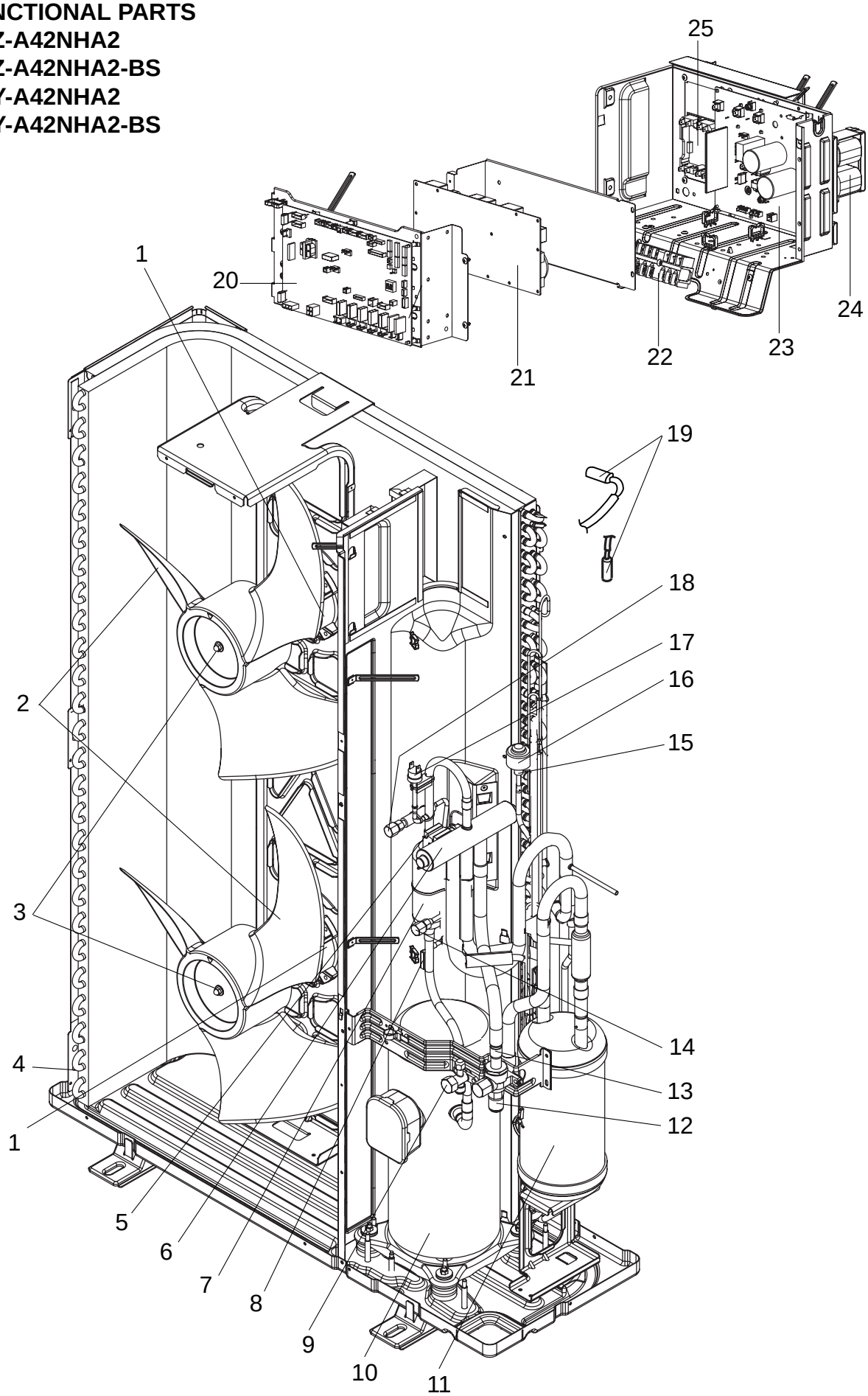

Part numbers that are circled are not shown in the figures.

No.	RoHS	Part No.	Part Name	Specification	Q'ty/set PUZ-A 42 NHA2,NHA2-BS	Q'ty/set PUY-A 42 NHA2,NHA2-BS	Remarks (Drawing No.)	Wiring Diagram Symbol	Recom-mended Q'ty
1	G	T7W E27 763	FAN MOTOR		2	2		MF1,2	
2	G	R01 E08 115	PROPELLER FAN		2	2			
3	G	R01 E09 097	NUT		2	2			
4	G	T7W E38 408	HEAT EXCHANGER		1	1			
5	G	T7W E21 242	SOLENOID COIL <4-WAY VALVE>		1			21S4	
6	G	T7W E05 403	4-WAY VALVE		1				
7	G	T7W E05 467	MUFFLER		1				
8	G	T7W E03 201	THERMISTOR (DISCHARGE)		1	1		TH4	
9	G	T7W E04 410	STOP VALVE	3/8	1	1			
10	G	T97 415 749	COMPRESSOR	ANV33FDJMT Including RUBBER MOUNT	1	1		MC	
11	G	R01 E47 440	ACCUMULATOR		1	1			
12	G	R01 E12 411	BALL VALVE	5/8	1	1			
13	G	R01 E06 450	STRAINER		1	1			
14	G	R01 E13 413	CHARGE PLUG		1	1			
15	G	R01 H20 401	EXPANSION VALVE		1	1			
16	G	R01 E50 242	LINEAR EXPANSION VALVE COIL		1	1		LEV-A	
17	G	T7W E07 208	HIGH PRESSURE SWITCH		1	1		63H	
18	G	R01 E15 413	CHARGE PLUG		1	1			
19	G	R01 E94 202	THERMISTOR (OUTDOOR 2-PHASE PIPE, OUTDOOR)		1	1		TH6,7	
20	G	T7W E62 315	CONTROLLER CIRCUIT BOARD		1	1		C.B.	
21	G	R01 E18 346	NOISE FILTER CIRCUIT BOARD		1	1		N.F.	
22	G	T7W E40 716	TERMINAL BLOCK	6P(L1,L2,GR,S1,S2,S3)	1	1		TB1	
23	G	R01 E65 313	POWER CIRCUIT BOARD		1	1		P.B.	
24	G	R01 E20 259	REACTOR		1	1		DCL	
25	G	R01 E07 233	ACTIVE FILTER MODULE		1	1		ACTM	
26	G	R01 E99 202	THERMISTOR (HEATSINK)		1	1		TH8	
27	G	R01 E00 209	LOW PRESSURE SWITCH		1	1		63L	
28	G	R01 H00 202	THERMISTOR (OUTDOOR PIPE)		1	1		TH3	
29	G	R01 E22 255	MAIN SMOOTHING CAPACITOR		1	1		CB	
30	G	R01 E06 239	FUSE	6.3A 250V	4	4		F1,2,3,4	

STRUCTURAL PARTS
PUZ-A18NHA2
PUZ-A18NHA2-BS
PUY-A12NHA2
PUY-A12NHA2-BS
PUY-A18NHA2
PUY-A18NHA2-BS

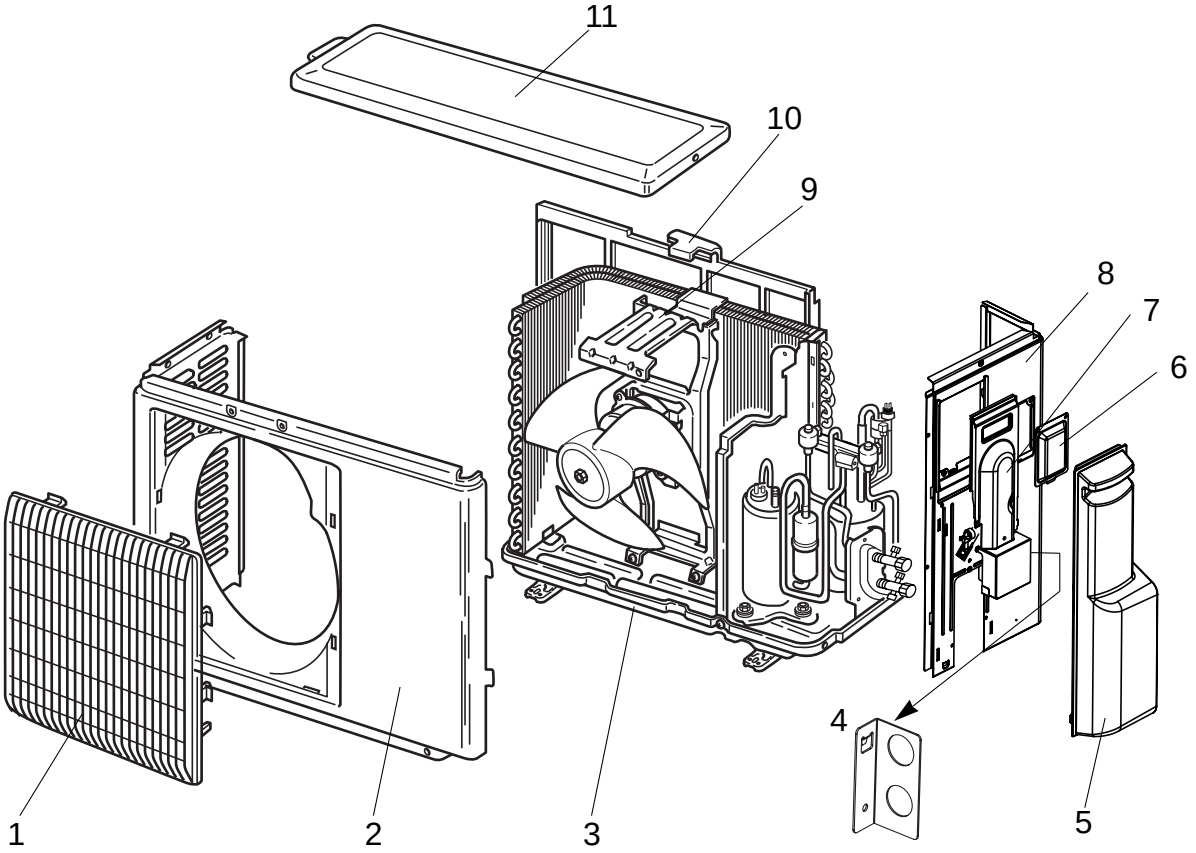

No.	RoHS	Part No.	Part Name	Specification	Q'ty/set PUZ-A·NHA2(-BS) PUY-A·NHA2(-BS) 12	Q'ty/set PUZ-A·NHA2(-BS) PUY-A·NHA2(-BS) 18	Remarks (Drawing No.)	Wiring Diagram Symbol	Recom-mended Q'ty
1	G	R01 E30 691	GRILLE		1	1			
2	G	R01 E09 668	FRONT PANEL		1	1			
3	G	R01 E29 686	BASE ASSY		1	1			
4	G	T7W E00 617	CONDUIT PLATE		1	1			
5	G	T7W E03 667	SERVICE PANEL		1	1			
6	G	R01 E02 518	SERVICE PANEL (FOR CHARGE PLUG)		1	1			
7	G	T7W E00 649	CORD COVER		1	1			
8	G	T7W E08 682	REAR PANEL		1	1			
9	G	R01 E32 130	MOTOR SUPPORT		1				
	G	R01 E29 130	MOTOR SUPPORT			1			
10	G	R01 E03 684	CONDENSER NET		1				
	G	R01 E02 684	CONDENSER NET			1			
11	G	T7W E05 641	TOP PANEL		1	1			

STRUCTURAL PARTS
PUZ-A24/30/36NHA2(-BS)
PUY-A24/30/36NHA2(-BS)

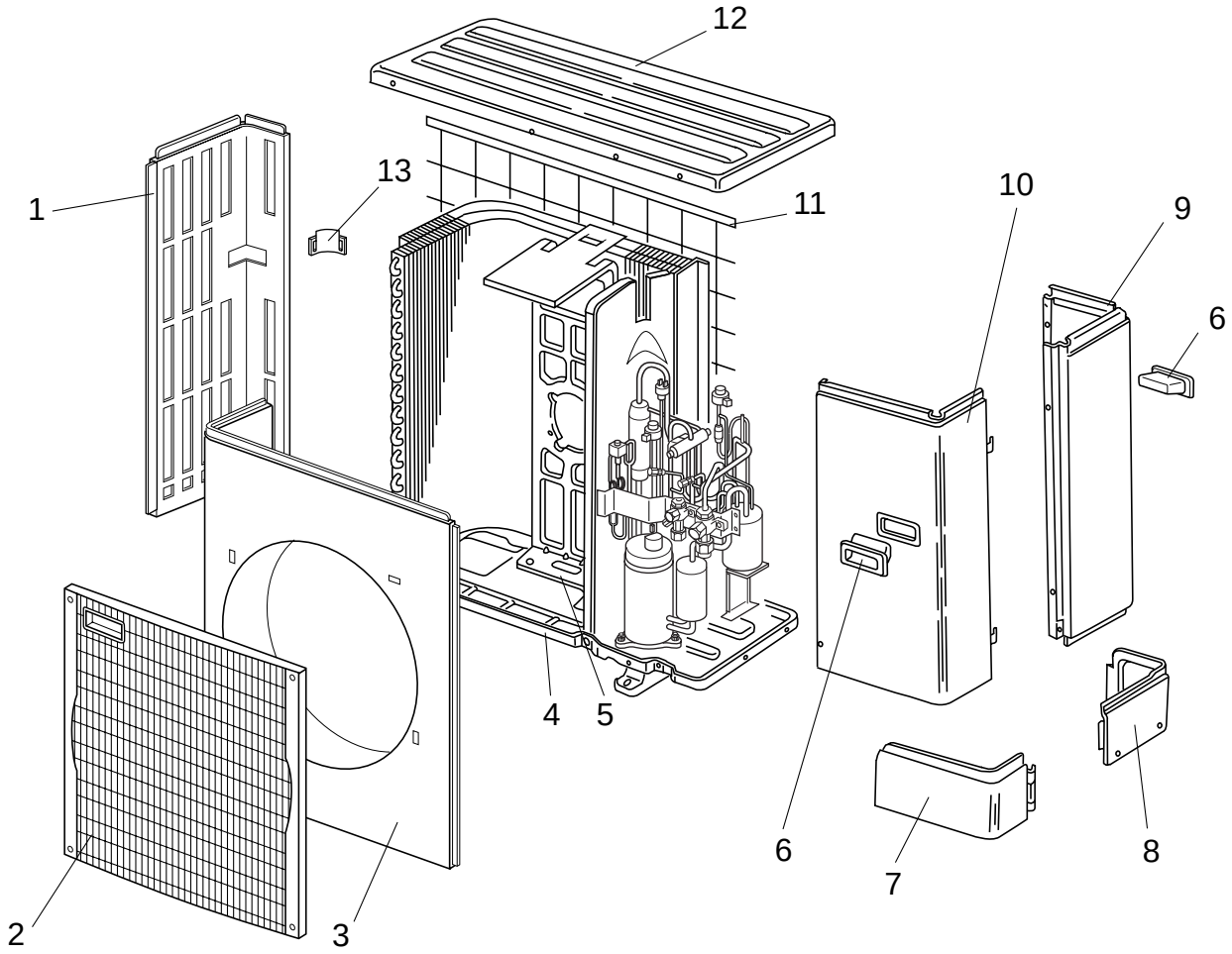

Part number that is circled is not shown in the figure.

No.	RoHS	Part No.	Part Name	Specification	Q'ty/set PUZ-A·NHA2(-BS) PUY-A·NHA2(-BS) 24, 30, 36	Remarks (Drawing No.)	Wiring Diagram Symbol	Recom-mended Q'ty
1	G	R01 E16 662	SIDE PANEL (L)		1			
2	G	T7W E03 691	FAN GRILLE		1			
3	G	T7W E05 667	FRONT PANEL		1			
4	G	R01 E30 686	BASE ASSY		1			
5	G	R01 E30 130	MOTOR SUPPORT		1			
6	G	R01 E01 655	HANDLE		2			
7	G	R01 E12 658	COVER PANEL (FRONT)		1			
8	G	R01 E11 658	COVER PANEL (REAR)		1			
9	G	R01 E31 661	SIDE PANEL (R)		1			
10	G	T7W E07 668	SERVICE PANEL		1			
11	G	R01 E06 698	REAR GUARD		1			
12	G	R01 E14 641	TOP PANEL		1			
13	G	R01 E02 655	HANDLE		1			
14	G	T7W E01 617	CONDUIT PLATE		1			

STRUCTURAL PARTS
PUZ-A42NHA2
PUZ-A42NHA2-BS
PUY-A42NHA2
PUY-A42NHA2-BS

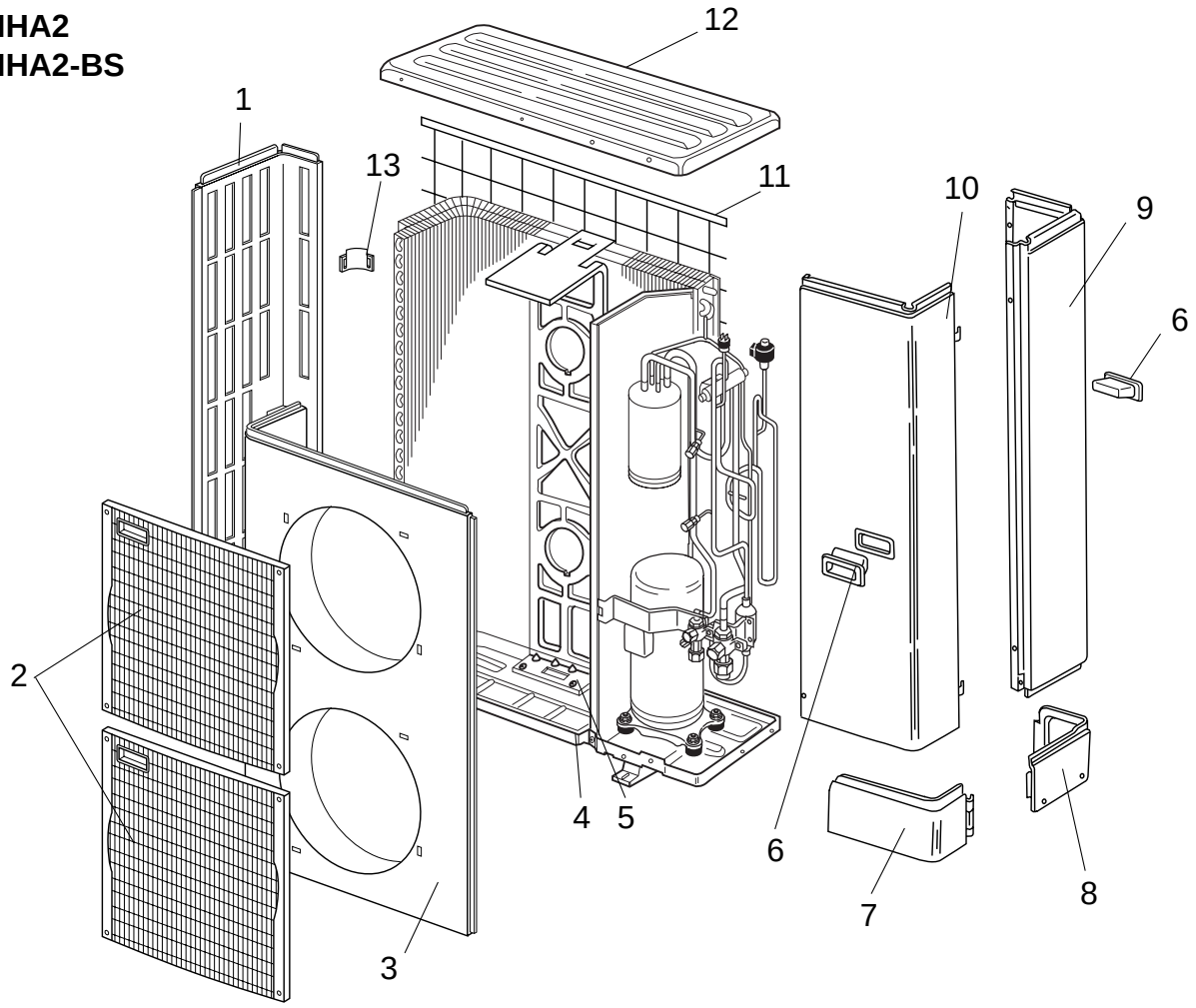

Part number that is circled is not shown in the figure.

No	RoHS	Part No.	Part Name	Specification	Q'ty/set PUZ, PUY-A 42 NHA2, NHA2-BS	Remarks (Drawing No.)	Wiring Diagram Symbol	Recom-mended Q'ty
1	G	T7W E03 662	SIDE PANEL (L)		1			
2	G	T7W E03 691	FAN GRILLE		2			
3	G	T7W E06 667	FRONT PANEL		1			
4	G	R01 E31 686	BASE ASSY		1			
5	G	R01 E27 130	MOTOR SUPPORT		1			
6	G	R01 E01 655	HANDLE		2			
7	G	R01 E13 658	COVER PANEL (FRONT)		1			
8	G	R01 E11 658	COVER PANEL (REAR)		1			
9	G	R01 E34 661	SIDE PANEL (R)		1			
10	G	T7W E08 668	SERVICE PANEL		1			
11	G	R01 E07 698	REAR GUARD		1			
12	G	R01 E14 641	TOP PANEL		1			
13	G	R01 E02 655	HANDLE		1			
14	G	T7W E01 617	CONDUIT PLATE		1			

Mr.SLIM™

MITSUBISHI ELECTRIC CORPORATION
HEAD OFFICE : TOKYO BLDG., 2-7-3, MARUNOUCHI, CHIYODA-KU, TOKYO 100-8310, JAPAN

New publication, effective Nov. 2007
Specifications subject to change without notice

©Copyright 2007 MITSUBISHI ELECTRIC ENGINEERING CO., LTD.
Distributed in Nov. 2007 No.OCB429 PDF 9
Made in Japan