CITY MULTI® Outdoor Unit: 20-TON PURY-P240YSHMU-A-BS

MITSUBISHI ELECTRIC

(Consists of Two PURY-P120YHMU-A-BS and One CMY-R100VBK Twinning Kit)

Job Name: Location:

Drawing Reference: Schedule No.

System No.: Date:

OUTDOOR VRFZ HEAT RECOVERY SYSTEM FEATURES

- 3-phase, 460V systems
- Modular variable refrigerant flow zoning (VRFZ) systems; smaller capacity units can be piped together to form a single, large-capacity two-pipe system
- Compact size for each outdoor module; can be transported through standard-sized doorways for installation
- Required Twinning Kit allows for easy field piping connection
- Selectable fan static, 0.12 or 0.24"WG external static pressure; factory set to 0"WG
- Max. Total Refrigerant Piping Length: 1,804' (P72,96); 1,969' (P120,144,168); 2,461' (P192); 2,625' (P216,240); Max. Refrigerant Line Length: 541'; Max. Control Wiring Length: 1,650'
- Connects to CITY MULTI indoor units; controlled via CITY MULTI Controls Network (CMCN)
- External finish: Pre-coated Galvanized-steel Sheets with thermoset polyester-resin
- Operating Temperature Range
  Cooling (Outdoor): 23° ~ 109°F (-5° ~ +43°C) DB
  Heating (Outdoor): -4° ~ +60°F (-20° ~ +16°C) WB

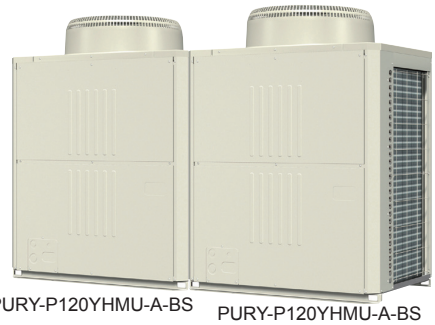

PURY-P120YHMU-A-BS PURY-P120YHMU-A-BS

INVERTER

R410A

OPTIONAL PARTS

- ☐ Twinning Kit*……...……...CMY-R100VBK
- ☐ Branch Joint (T-Branch: ≤72,000 Btu/h)……CMY-Y102S-G2
- ☐ Branch Joint (T-Branch: 73,000-144,000 Btu/h)……CMY-Y102L-G2
- ☐ Joint Adapter (Port Connector>54,000 Btu/h)……CMY-R160J
- ☐ Main BC Controller……CMB-P108/1010/1013/1016NU-GA
- ☐ Sub BC Controller……CMB-P104/108NU-GB/-1016NU-HB

* Twinning Kit is necessary to combine the refrigerant flows of the modules and is included in the outdoor unit set.

Specifications		System	Module 1	Module 2
Unit Type		**PURY-P240YSHMU-A-BS**	**PURY-P120YHMU-A-BS**	**PURY-P120YHMU-A-BS**
Nominal Cooling Capacity	**Btu/h**	240,000	120,000	120,000
Nominal Heating Capacity	**Btu/h**	240,000	120,000	120,000
External Dimensions (H x W x D)	**In. / mm**	Refer to Module Data	65 x 48-1/16 x 29-15/16 / 1,650 x 1,220 x 760	65 x 48-1/16 x 29-15/16 / 1,650 x 1,220 x 760
Net Weight	**Lbs. / kg**	1,236 / 560	618 / 280	618 / 280
Electrical Power Requirements	**Voltage, Phase, Hertz**	Refer to Module Data**	460V, 3-phase, 60Hz	
Cooling Power Input	**kW**	21.61	Refer to System Data	
Heating Power Input	**kW**	20.92		
Cooling Current (460V)	**A**	30.1	Refer to System Data	
Heating Current (460V)	**A**	29.1		
Minimum Circuit Ampacity (MCA)**	**A**	Refer to Module Data**	20**	20**
Maximum Overcurrent Protection (MOCP)**	**A**	Refer to Module Data**	25**	25**
Piping Diameter			Refer to System Data	
From Twinning Kit to Indoor Units (Brazed) (In. / mm)	**Liquid (High Pressure)**	1-1/8 / 28.58		
	Gas (Low Pressure)	1-1/8 / 28.58		
From Modules to Twinning Kit (Brazed) (In. / mm)	**Liquid (High Pressure)**	Refer to Module Data	3/4 / 19.05	3/4 / 19.05
	Gas (Low Pressure)		1-1/8 / 28.58	1-1/8 / 28.58
Indoor Unit	**Total Capacity**	50 to 150% of ODUs	Refer to System Data	
	Model / Quantity	P06 ~ P96 / 2 to 50 Max. No. Connectable Branch: 48		
Sound Pressure Levels	**dB(A)**	63.0	60.0	60.0
Fan		Refer to Module Data		
Type x Quantity			Propeller Fan x 1	Propeller Fan x 1
Airflow Rate	**CFM**		7,950	7,950
Direct-drive Inverter Motor Output	**kW**		0.92	0.92
Compressor Operating Range		9% to 100%	Refer to System Data	
Compressor Type x Quantity		Refer to Module Data	Inverter-driven Scroll Hermetic x 1	Inverter-driven Scroll Hermetic x 1
Compressor Motor Output	**kW**		8.1	8.1
Compressor Crankcase Heater	**kW**		0.057	0.057
Refrigerant		Refer to Module Data	R410A	
Lubricant			MEL32	
High-pressure Protection Device		Refer to Module Data	601 psi / 4.15 MPa	601 psi / 4.15 MPa
Compressor / Fan Protection Device			Overheat Protection / Thermal Switch	Overheat Protection / Thermal Switch
Inverter Protection Device			Overheat / Overcurrent Protection	Overheat / Overcurrent Protection
Blue Fin Anti-corrosion Protection: Cellulose- and polyurethane-resin coating treatment applied to condenser coil that protects it from air contaminants; ≥1μm to 1.5μm thick; Salt Spray Test Method - no unusual rust development to 960 hours.				

** Each individual module requires a separate electrical connection. Reference electrical data for each individual module.

SEACOAST PROTECTION

- External Panel Base, External Front Panel, Pillar: Alloyed galvanized-steel sheets with thermoset polyester-resin coating on internal and external surfaces
- Compressor Cover: Galvanized-aluminum sheets with thermoset polyester-resin coating on internal and external surfaces
- Electrical Parts Box: Galvanized-aluminum sheets with thermoset polyester-resin coating on external surface
- Fan Motor Support: Galvanized-steel sheets with thermoset polyester-resin coating on internal and external surfaces
- Printed Circuit Board: Epoxy resin with polyurethane-coating on external surface

Outdoor Unit: PURY-P240YSHMU-A-BS – DIMENSIONS

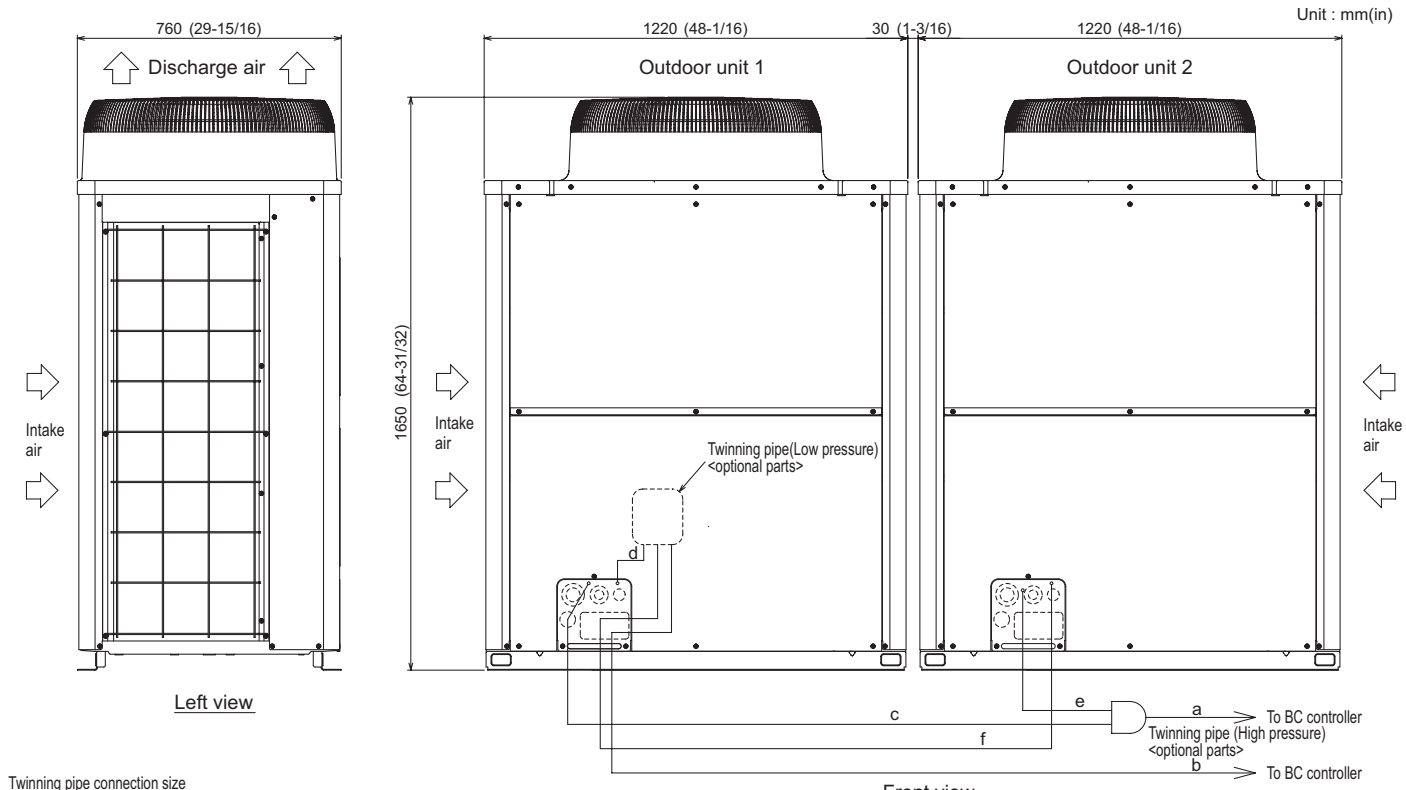

Twinning pipe connection size

System Name			PURY-P192YSHMU-A(-BS)	PURY-P216YSHMU-A(-BS)	PURY-P240YSHMU-A(-BS)
Module Name	Module 1		PURY-P96YHMU-A(-BS)	PURY-P120YHMU-A(-BS)	PURY-P120YHMU-A(-BS)
	Module 2		PURY-P96YHMU-A(-BS)	PURY-P96YHMU-A(-BS)	PURY-P120YHMU-A(-BS)
Outdoor Twinning Kit			CMY-R100VBK		
BC controller ~ Twinning pipe	High pressure	a	ø22.2 (7/8)	ø28.58 (1-1/8)	
	Low pressure	b	ø28.58 (1-1/8)		

	Unit model	High pressure	Low pressure
		c or e	d or f
Twinning pipe ~ Outdoor unit	P96	ø19.05 (3/4)	ø22.2 (7/8)
	P120	ø19.05 (3/4)	ø28.58 (1-1/8)

Note 1. Connect the pipes as shown in the figure above. Refer to the table above for the pipe size.
2. Twinning pipe (High pressure) should not be tilted more than 15 degrees from the horizontal plane. Refer to the Installation Manual for details of Twinning Kit installation.
3. The pipe section before the Twinning Kit (section "a" in the figure) must have at least 500mm (19-11/16) of straight section (*including the straight pipe that is supplied with the Twinning Kit).
4. Only use the Twinning Kit manufactured by Mitsubishi.

Twinning Kit: CMY-R100VBK

CMY-R100VBK

Low-pressure pipe twinning kit

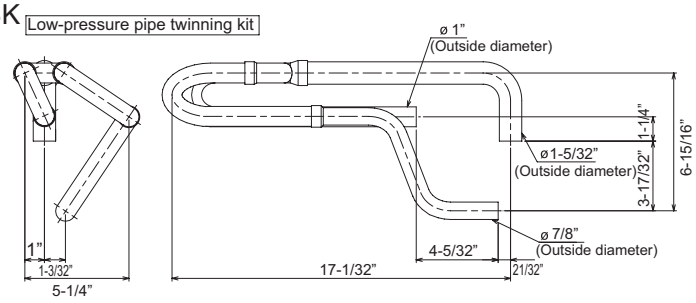

<Elbow pipe (Accessory)>

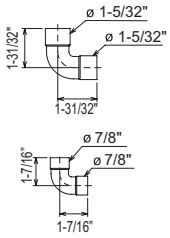

<Low-pressure pipe twinning kit (Accessory)>

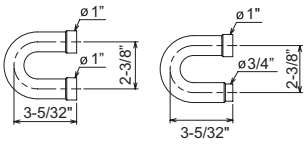

<Reducer pipe(Accessory)>

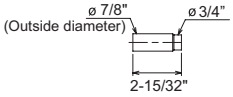

High-pressure twinning pipe

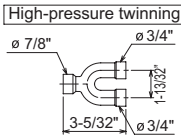

<Reducer pipe(Accessory)>

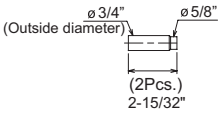

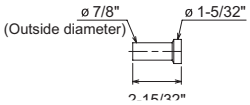

<Pipe for routing through the bottom (Accessory)>

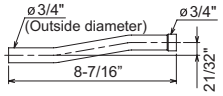

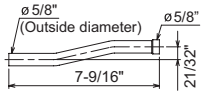

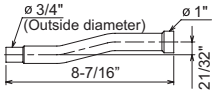

<Pipe for routing through the front (Accessory)>

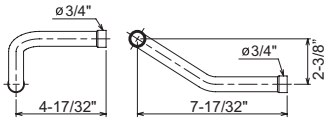

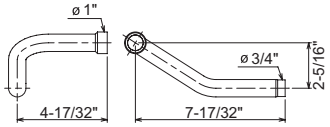

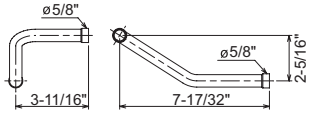

For instructions on piping the units together using the twinning kit, see the Installation Manual.

Modules 1 and 2: PURY-P120YHMU-A-BS – DIMENSIONS

Unit : mm(in)

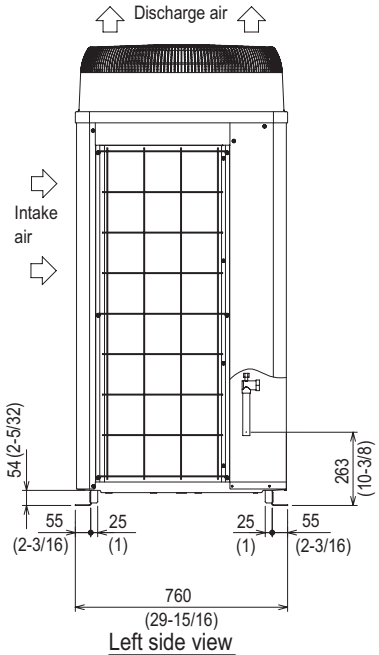

Left side view

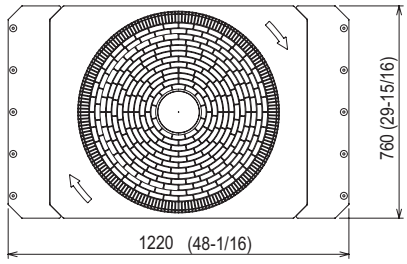

Top view

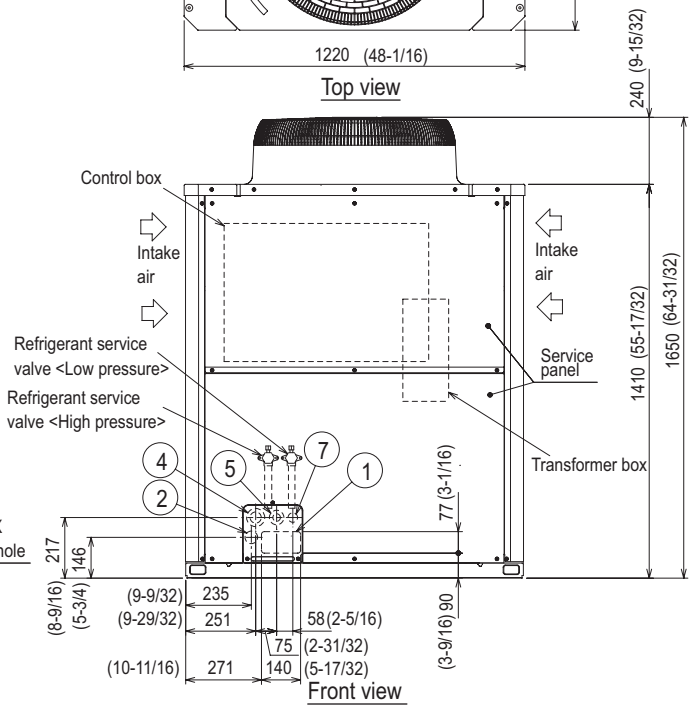

Front view

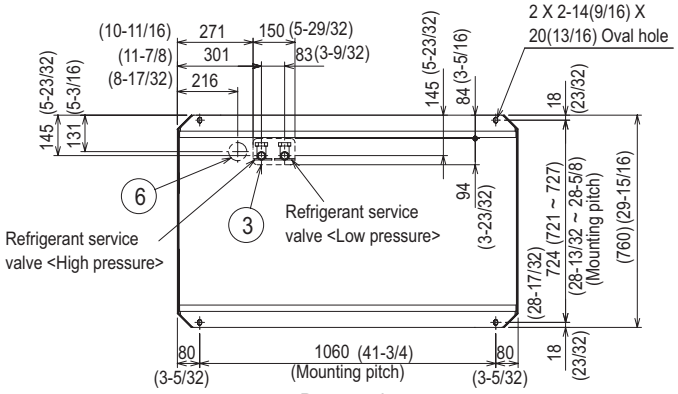

Bottom view

Accessories

● Connecting pipe

Low pressure	· Pipe	(IDø25.4 [1] X IDø22.2 [7/8])·····P96	1 pc.
	· Pipe	(IDø25.4 [1] X IDø28.58 [1-1/8])·····P120	1 pc.
High pressure	· Pipe	(IDø25.4 [1] X ODø19.05 [3/4])·····P96, P120	1 pc.
	· Elbow	(IDø19.05 [3/4] X ODø19.05 [3/4])·····P96, P120	1 pc.

Note 1. Refer to the Engineering or Installation manual for information regarding necessary clearance around the unit, and installation site requirements.
2. When brazing the pipes, protect the refrigerant service valve by wrapping it with a wet cloth to keep its temperature under 120°C (248°F).

NO.	Usage		Specifications
①	For pipes	Front through hole	140 X 77 Knockout hole (5-17/32)(3-1/16)
②		Front through hole (Uses when twinning kit (optional parts) is mounted.)	ø45 Knockout hole (1-25/32)
③		Bottom through hole	150 X 94 Knockout hole (5-29/32)(3-23/32)
④	For wires	Front through hole	ø62.7 or ø34.5 Knockout hole (2-15/32) (1-3/8)
⑤		Front through hole	ø43.7 or ø22.2 Knockout hole (1-3/4) (7/8)
⑥		Bottom through hole	ø65 Knockout hole (2-9/16)
⑦	For transmission cables	Front through hole	ø34 Knockout hole (1-11/32)

Connecting pipe specifications

	Connection specifications for the refrigerant service valve *1	
Model	High pressure	Low pressure
PURY-P96YHMU (-BS)	ø19.05 Brazed (3/4)	ø22.2 Brazed (7/8)
PURY-P120YHMU (-BS)		ø28.58 Brazed (1-1/8)

*1. Use only the supplied connecting pipes (for bottom and front piping).

Certificate Number FM33568

Mitsubishi Electric Air Conditioning & Refrigeration Systems Works acquired ISO 9001 certification under Series 9000 of the International Standard Organization (ISO) based on a review of quality warranties for the production of refrigeration and air conditioning equipment.

ISO Authorization System
The ISO 9000 series is a plant authorization system relating to quality warranties as stipulated by the ISO. ISO 9001 certifies quality warranties based on the "design, development, production, installation and auxiliary services" for products built at an authorized plant.

Mitsubishi Electric Air Conditioning & Refrigeration Systems Works acquired environmental management system standard ISO 14001 certification.

The ISO 14000 series is a set of standards applying to environmental protection set by the International Standard Organization (ISO).

Certificate Number EC97J1227

HVAC Advanced Products Division
Mitsubishi Electric & Electronics USA, Inc.

3400 Lawrenceville Suwanee Rd.
Suwanee, GA 30024
Tele: 678-376-2900 • Fax: 800-889-9904
Toll Free: 800-433-4822 (#4)
www.mehvac.com

Specifications are subject to change without notice.

 © MITSUBISHI ELECTRIC / HVAC 2008