# CITY MULTI® Outdoor Unit: 12-TON PURY-P144YSHMU-A-BS

MITSUBISHI ELECTRIC

**(Consists of Two PURY-P72YHMU-A-BS and One CMY-R100VBK Twinning Kit)**

Job Name: Location:

Drawing Reference: Schedule No.

System No.: Date:

## OUTDOOR VRFZ HEAT RECOVERY SYSTEM FEATURES

- 3-phase, 460V systems
- Modular variable refrigerant flow zoning (VRFZ) systems; smaller capacity units can be piped together to form a single, large-capacity two-pipe system
- Compact size for each outdoor module; can be transported through standard-sized doorways for installation
- Required Twinning Kit allows for easy field piping connection
- Selectable fan static, 0.12 or 0.24"WG external static pressure; factory set to 0"WG
- Max. Total Refrigerant Piping Length: 1,804' (P72,96); 1,969' (P120,144,168); 2,461' (P192); 2,625' (P216,240); Max. Refrigerant Line Length: 541'; Max. Control Wiring Length: 1,650'
- Connects to CITY MULTI indoor units; controlled via CITY MULTI Controls Network (CMCN)
- External finish: Pre-coated Galvanized-steel Sheets with thermoset polyester-resin
- Operating Temperature Range
  Cooling (Outdoor): 23° ~ 109°F (-5° ~ +43°C) DB
  Heating (Outdoor): -4° ~ +60°F (-20° ~ +16°C) WB

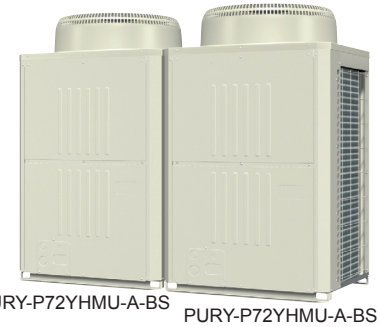

PURY-P72YHMU-A-BS PURY-P72YHMU-A-BS

INVERTER

R410A

## OPTIONAL PARTS

- ☐ Twinning Kit*……...……...CMY-R100VBK
- ☐ Branch Joint (T-Branch: ≤72,000 Btu/h)……CMY-Y102S-G2
- ☐ Branch Joint (T-Branch: 73,000-144,000 Btu/h)……CMY-Y102L-G2
- ☐ Joint Adapter (Port Connector>54,000 Btu/h)……..CMY-R160J
- ☐ Main BC Controller……CMB-P108/1010/1013/1016NU-GA
- ☐ Sub BC Controller……CMB-P104/108NU-GB/1016NU-HB

* Twinning Kit is necessary to combine the refrigerant flows of the modules and is included in the outdoor unit set.

| Specifications | | System | Module 1 | Module 2 |
|---|---|---|---|---|
| Unit Type | | PURY-P144YSHMU-A-BS | PURY-P72YHMU-A-BS | PURY-P72YHMU-A-BS |
| Nominal Cooling Capacity | Btu/h | 144,000 | 72,000 | 72,000 |
| Nominal Heating Capacity | Btu/h | 160,000 | 80,000 | 80,000 |
| External Dimensions (H x W x D) | In. / mm | Refer to Module Data | 65 x 36-1/4 x 29-15/16 / 1,650 x 920 x 760 | 65 x 36-1/4 x 29-15/16 / 1,650 x 920 x 760 |
| Net Weight | Lbs. / kg | 1,104 / 500 | 552 / 250 | 552 / 250 |
| Electrical Power Requirements | Voltage, Phase, Hertz | Refer to Module Data** | 460V, 3-phase, 60Hz | |
| Cooling Power Input | kW | 11.32 | Refer to System Data | |
| Heating Power Input | kW | 12.44 | | |
| Cooling Current (460V) | A | 15.7 | Refer to System Data | |
| Heating Current (460V) | A | 17.3 | | |
| Minimum Circuit Ampacity (MCA)** | A | Refer to Module Data** | 11** | 11** |
| Maximum Overcurrent Protection (MOCP)** | A | Refer to Module Data** | 15** | 15** |
| *Piping Diameter* | | | Refer to System Data | |
| From Twinning Kit to Indoor Units (Brazed) (In. / mm) | Liquid (High Pressure) | 7/8 / 22.2 | | |
| | Gas (Low Pressure) | 1-1/8 / 28.58 | | |
| From Modules to Twinning Kit (Brazed) (In. / mm) | Liquid (High Pressure) | Refer to Module Data | 5/8 / 15.88 | 5/8 / 15.88 |
| | Gas (Low Pressure) | | 3/4 / 19.05 | 3/4 / 19.05 |
| Indoor Unit | Total Capacity | 50 to 150% of ODUs | Refer to System Data | |
| | Model / Quantity | P06 ~ P96 / 1 to 36 | | |
| Sound Pressure Levels | dB(A) | 61.0 | 58.0 | 58.0 |
| *Fan* | | Refer to Module Data | | |
| Type x Quantity | | | Propeller Fan x 1 | Propeller Fan x 1 |
| Airflow Rate | CFM | | 6,550 | 6,550 |
| Direct-drive Inverter Motor Output | kW | | 0.92 | 0.92 |
| Compressor Operating Range | | 10% to 100% | Refer to System Data | |
| Compressor Type x Quantity | | Refer to Module Data | Inverter-driven Scroll Hermetic x 1 | Inverter-driven Scroll Hermetic x 1 |
| Compressor Motor Output | kW | | 4.4 | 4.4 |
| Compressor Crankcase Heater | kW | | 0.051 | 0.051 |
| Refrigerant | | Refer to Module Data | R410A | |
| Lubricant | | | MEL32 | |
| High-pressure Protection Device | | Refer to Module Data | 601 psi / 4.15 MPa | 601 psi / 4.15 MPa |
| Compressor / Fan Protection Device | | | Overheat Protection / Thermal Switch | Overheat Protection / Thermal Switch |
| Inverter Protection Device | | | Overheat / Overcurrent Protection | Overheat / Overcurrent Protection |
| **Blue Fin Anti-corrosion Protection:** Cellulose- and polyurethane-resin coating treatment applied to condenser coil that protects it from air contaminants; ≥1μm to 1.5μm thick; Salt Spray Test Method - no unusual rust development to 960 hours. | | | | |

** Each individual module requires a separate electrical connection. Reference electrical data for each individual module.

# SEACOAST PROTECTION

- External Panel Base, External Front Panel, Pillar: Alloyed galvanized-steel sheets with thermoset polyester-resin coating on internal and external surfaces
- Compressor Cover: Galvanized-aluminum sheets with thermoset polyester-resin coating on internal and external surfaces
- Electrical Parts Box: Galvanized-aluminum sheets with thermoset polyester-resin coating on external surface
- Fan Motor Support: Galvanized-steel sheets with thermoset polyester-resin coating on internal and external surfaces
- Printed Circuit Board: Epoxy resin with polyurethane-coating on external surface

# Outdoor Unit: PURY-P144YSHMU-A-BS – DIMENSIONS

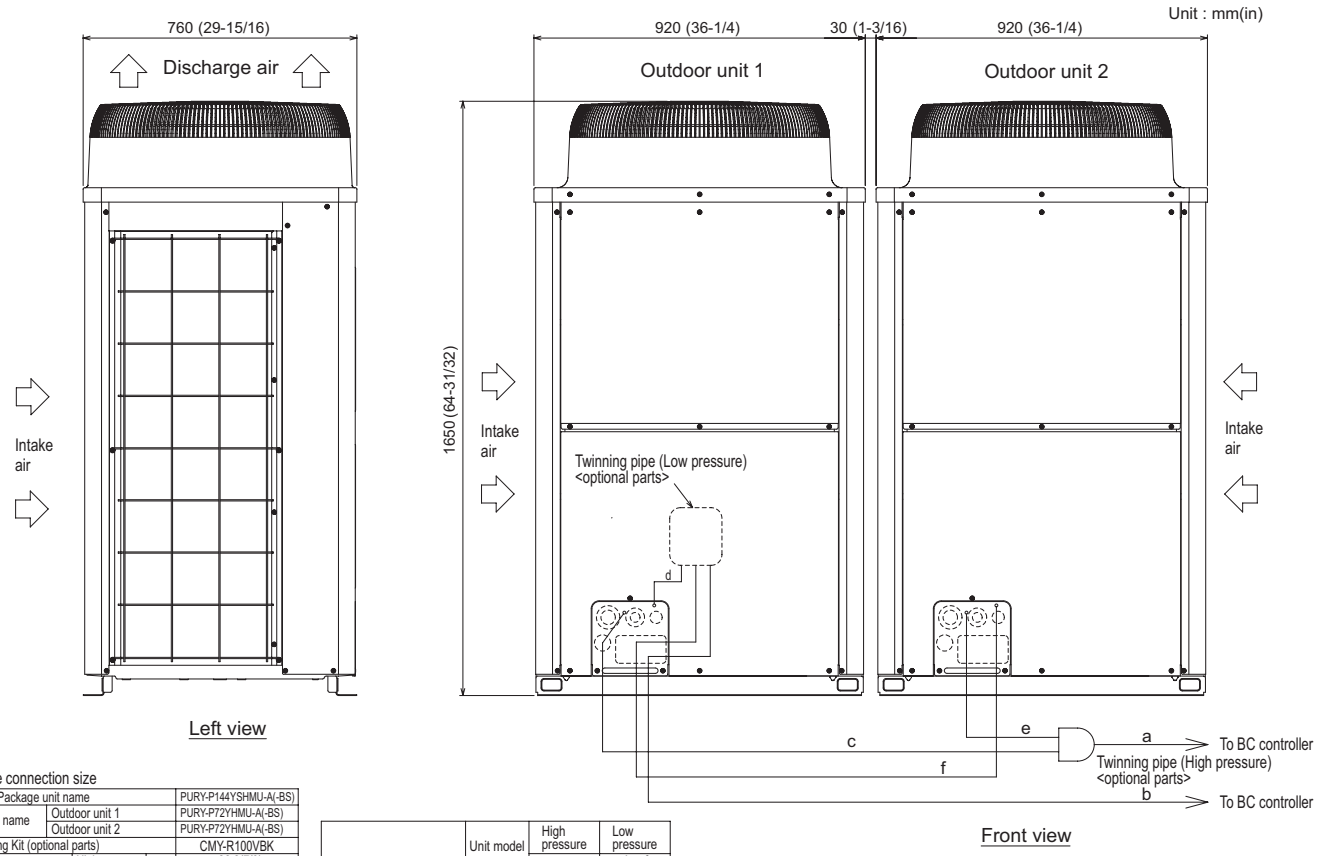


Twinning pipe connection size

| Package unit name | | | PURY-P144YSHMU-A(-BS) |
|---|---|---|---|
| Component unit name | Outdoor unit 1 | | PURY-P72YHMU-A(-BS) |
| | Outdoor unit 2 | | PURY-P72YHMU-A(-BS) |
| Outdoor Twinning Kit (optional parts) | | | CMY-R100VBK |
| BC controller ~ Twinning pipe | High pressure | a | ø22.2(7/8) |
| | Low pressure | b | ø28.58(1-1/8) |

| | Unit model | High pressure | Low pressure |
|---|---|---|---|
| | | c or e | d or f |
| Twinning pipe ~ Outdoor unit | P72 | ø15.88(5/8) | ø19.05(3/4) |

Note 1.Connect the pipes as shown in the figure above. Refer to the table above for the pipe size.
2.Twinning pipe (high pressure) should not have a side-to-side angle of more than 15 degrees.
3.Refer to the Installation Manual for details of the Twinning pipe installation.
4.The straight length of piping before the Twinning pipe (section "a" in the figure) must be at least 500mm(19-11/16) (*including the straight pipe supplied with the Twinning pipe).
5.Use only the Twinning pipes manufactured by Mitsubishi (optional parts).

# Twinning Kit: CMY-R100VBK

CMY-R100VBK

Low-pressure pipe twinning kit

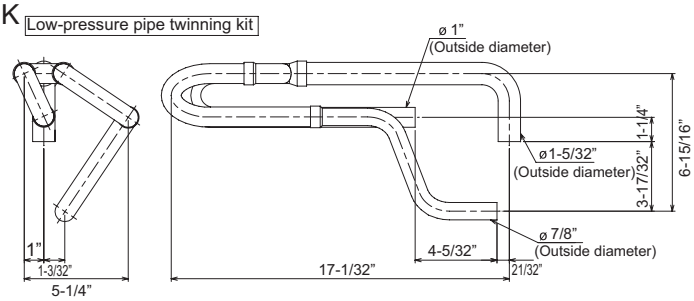


<Elbow pipe (Accessory)>

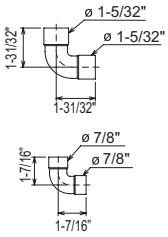


<Low-pressure pipe twinning kit (Accessory)>

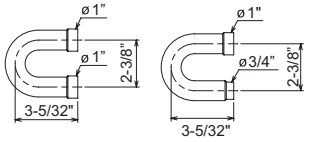


<Reducer pipe(Accessory)>

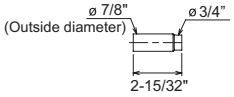


High-pressure twinning pipe

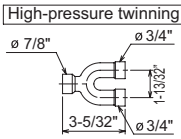


<Reducer pipe(Accessory)>

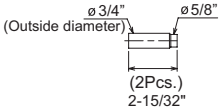


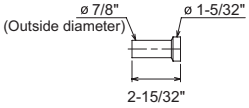


<Pipe for routing through the bottom (Accessory)>

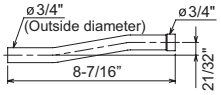


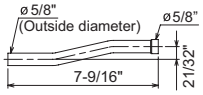


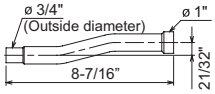


<Pipe for routing through the front (Accessory)>

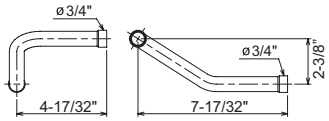


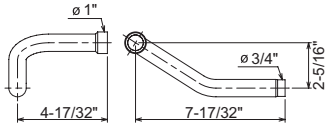


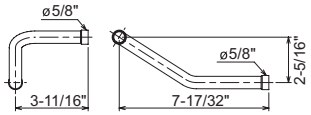


For instructions on piping the units together using the twinning kit, see the Installation Manual.

# Modules 1 and 2: PURY-P72YHMU-A-BS – DIMENSIONS

Unit : mm(in)

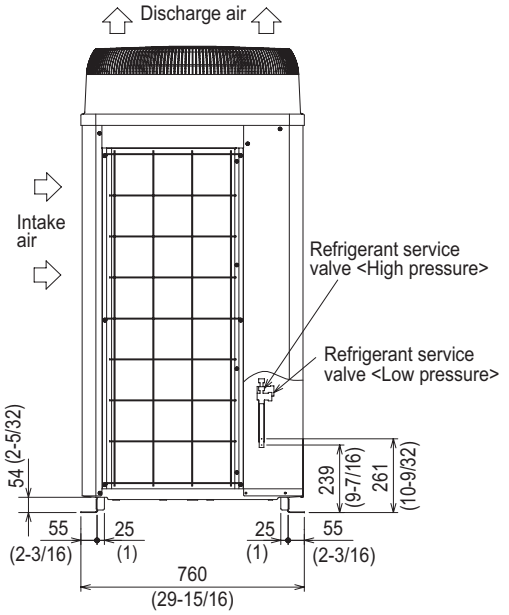


Left side view

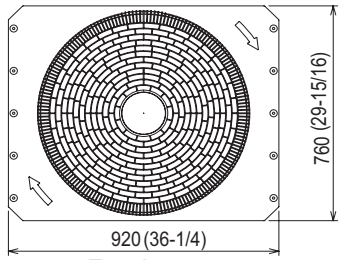


Top view

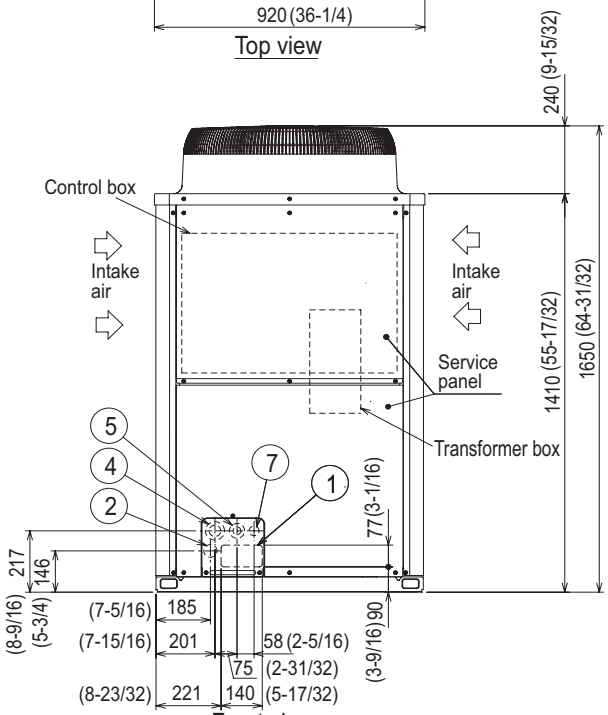


Front view

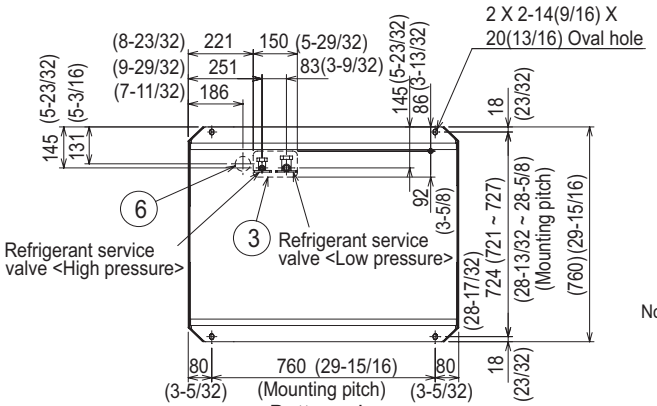


Bottom view

Note 1. Refer to the Engineering or Installation manual for information regarding necessary clearance around the unit, and installation site requirements.
2. When brazing the pipes, protect the refrigerant service valve by wrapping it with a wet cloth to keep its temperature under 120°C (248°F).

| NO. | Usage | | Specifications |
|---|---|---|---|
| ① | For pipes | Front through hole | 140 X 77 Knockout hole (5-17/32)(3-1/16) |
| ② | | Front through hole (Uses when twinning kit (optional parts) is mounted.) | ø45 Knockout hole (1-25/32) |
| ③ | | Bottom through hole | 150 X 92 Knockout hole (5-29/32)(3-5/8) |
| ④ | For wires | Front through hole | ø62.7 or ø34.5 Knockout hole (2-15/32) (1-3/8) |
| ⑤ | | Front through hole | ø43.7 or ø22.2 Knockout hole (1-3/4) (7/8) |
| ⑥ | | Bottom through hole | ø52 Knockout hole (2-1/16) |
| ⑦ | For transmission cables | Front through hole | ø34 Knockout hole (1-11/32) |

Connecting pipe specifications

| | Connection specifications for the refrigerant service valve *1 | |
|---|---|---|
| Model | High pressure | Low pressure |
| PURY-P72YHMU (-BS) | ø15.88 Brazed (5/8) | ø19.05 Brazed (3/4) |

*1.Swage the field pipes (for bottom piping and front piping) and connect directly to the valve.

Certificate Number FM33568

**Mitsubishi Electric Air Conditioning & Refrigeration Systems Works acquired ISO 9001 certification under Series 9000 of the International Standard Organization (ISO) based on a review of quality warranties for the production of refrigeration and air conditioning equipment.**

**ISO Authorization System**
**The ISO 9000 series is a plant authorization system relating to quality warranties as stipulated by the ISO. ISO 9001 certifies quality warranties based on the "design, development, production, installation and auxiliary services" for products built at an authorized plant.**

**Mitsubishi Electric Air Conditioning & Refrigeration Systems Works acquired environmental management system standard ISO 14001 certification.**

**The ISO 14000 series is a set of standards applying to environmental protection set by the International Standard Organization (ISO).**

**Certificate Number EC97J1227**


**HVAC Advanced Products Division**
Mitsubishi Electric & Electronics USA, Inc.

3400 Lawrenceville Suwanee Rd.
Suwanee, GA 30024
Tele: 678-376-2900 • Fax: 800-889-9904
Toll Free: 800-433-4822 (#4)
www.mehvac.com


**Specifications are subject to change without notice.**

 © MITSUBISHI ELECTRIC / HVAC 2008