MITSUBISHI ELECTRIC

Changes for the Better

AIR CONDITIONERS

2017

R410A

TECHNICAL & SERVICE MANUAL

Model name

PEFY-P06NMAU-E3, PEFY-P27NMAU-E3
PEFY-P08NMAU-E3, PEFY-P30NMAU-E3
PEFY-P12NMAU-E3, PEFY-P36NMAU-E3
PEFY-P15NMAU-E3, PEFY-P48NMAU-E3
PEFY-P18NMAU-E3, PEFY-P54NMAU-E3
PEFY-P24NMAU-E3

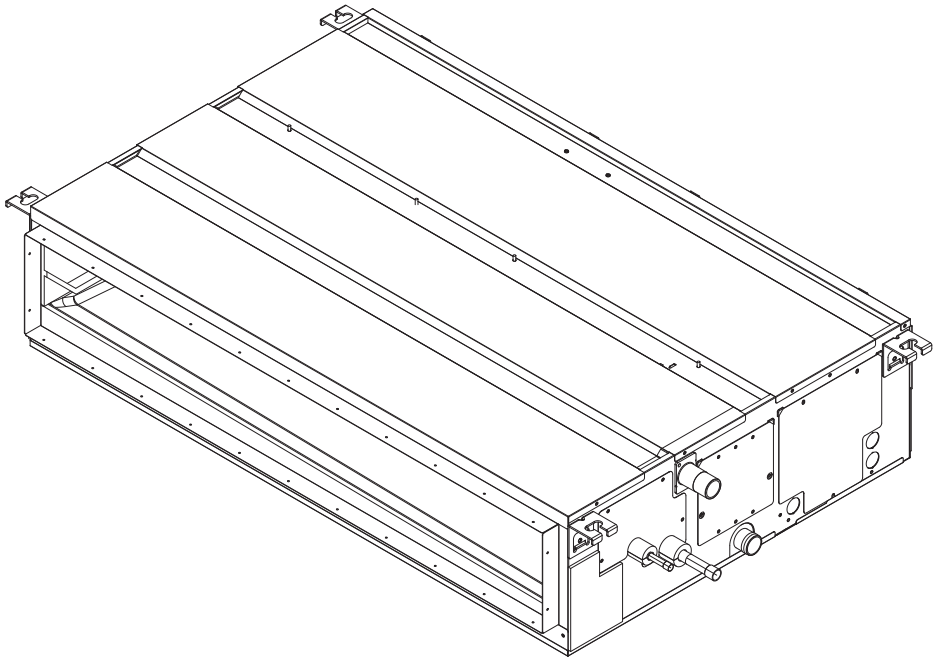

3rd edition

CITY MULTI

Safety Precautions

Read before installation and performing electrical work

- Thoroughly read the following safety precautions prior to installation.
- Observe these safety precautions for your safety.
- This equipment may have adverse effects on the equipment on the same power supply system.
- Contact the local power authority before connecting to the system.

Symbol explanations

WARNING
This symbol indicates that failure to follow the instructions exactly as stated poses the risk of serious injury or death.

CAUTION
This symbol indicates that failure to follow the instructions exactly as stated poses the risk of serious injury or damage to the unit.

Indicates an action that must be avoided.

Indicates important instructions.

Indicates a parts that requires grounding.

Indicates that caution must be taken with rotating parts. (This symbol is on the main unit label.) <Color: Yellow>

Indicates that the parts that are marked with this symbol pose a risk of electric shock. (This symbol is on the main unit label.) <Color: Yellow>

WARNING
Carefully read the labels affixed to the main unit.

WARNING

Do not use refrigerant other than the type indicated in the manuals provided with the unit and on the nameplate.
Doing so may cause the unit or pipes to burst, or result in explosion or fire during use, during repair, or at the time of disposal of the unit. It may also be in violation of applicable laws. MITSUBISHI ELECTRIC CORPORATION cannot be held responsible for malfunctions or accidents resulting from the use of the wrong type of refrigerant.

Ask your dealer or a qualified technician to install the unit.
Improper installation by the user may result in water leakage, electric shock, or fire.

Properly install the unit on a surface that can withstand its weight.
Unit installed on an unstable surface may fall and cause injury.

Only use specified cables. Securely connect each cable so that the terminals do not carry the weight of the cable.
Improperly connected cables may produce heat and start a fire.

Take appropriate safety measures against wind gusts and earthquakes to prevent the unit from toppling over.
Improper installation may cause the unit to topple over and cause injury or damage to the unit.

Only use accessories (i.e., air cleaners, humidifiers, electric heaters) recommended by Mitsubishi Electric.

Do not make any modifications or alterations to the unit. Consult your dealer for repair.
Improper repair may result in water leakage, electric shock, or fire.

Do not touch the heat exchanger fins with bare hands.
The fins are sharp and pose a risk of cuts.

In the event of a refrigerant leak, thoroughly ventilate the room.
If gaseous refrigerant leaks out and comes in contact with an open flame, toxic gases will be generated.

Properly install the unit according to the instructions in the Installation Manual.
Improper installation may result in water leakage, electric shock, or fire.

Have all electrical work performed by an authorized electrician according to the local regulations and the instructions in this manual. Use a dedicated circuit.
Insufficient power supply capacity or improper installation of the unit may result in malfunctions of the unit, electric shock, or fire.

Keep electrical parts away from water.
Wet electrical parts pose a risk of electric shock, smoke, or fire.

Securely attach the control box cover.
If the cover is not installed properly, dust or water may infiltrate and pose a risk of electric shock, smoke, or fire.

Only use the type of refrigerant that is indicated on the unit when installing or relocating the unit.
Infiltration of any other types of refrigerant or air into the unit may adversely affect the refrigerant cycle and may cause the pipes to burst or explode.

When installing the unit in a small space, take appropriate precautions to prevent leaked refrigerant from reaching the limiting concentration.
Leaked refrigerant gas will displace oxygen and may cause oxygen starvation. Consult your dealer before installing the unit.

Consult your dealer or a qualified technician when moving or reinstalling the unit.
Improper installation may result in water leakage, electric shock, or fire.

After completing the service work, check for a refrigerant leak.
If leaked refrigerant is exposed to a heat source, such as a fan heater, stove, or electric grill, toxic gases will be generated.

Do not try to defeat the safety features of the unit.
Forced operation of the pressure switch or the temperature switch by defeating the safety features for these devices, or the use of accessories other than the ones that are recommended by Mitsubishi Electric may result in smoke, fire, or explosion.

Consult your dealer for proper disposal method.

Do not use a leak detection additive.

Precautions for handling units for use with R410A

⚠ CAUTION

Do not use the existing refrigerant piping.
A large amount of chlorine that may be contained in the residual refrigerant and refrigerator oil in the existing piping may cause the refrigerator oil in the new unit to deteriorate.

Use refrigerant piping materials made of phosphorus deoxidized copper. Keep the inner and outer surfaces of the pipes clean and free of such contaminants as sulfur, oxides, dust, dirt, shaving particles, oil, and moisture.
Contaminants in the refrigerant piping may cause the refrigerator oil to deteriorate.

Store the piping materials indoors, and keep both ends of the pipes sealed until immediately before brazing. (Keep elbows and other joints wrapped in plastic.)
Infiltration of dust, dirt, or water into the refrigerant system may cause the refrigerator oil to deteriorate or cause the compressor to malfunction.

Use a small amount of ester oil, ether oil, or alkyl benzene to coat flares and flanges.
Infiltration of a large amount of mineral oil may cause the refrigerator oil to deteriorate.

Charge the system with refrigerant in the liquid phase.
If gaseous refrigerant is drawn out of the cylinder first, the composition of the remaining refrigerant in the cylinder will change and become unsuitable for use.

Only use R410A.
The use of other types of refrigerant that contain chloride may cause the refrigerator oil to deteriorate.

Use a vacuum pump with a check valve.
If a vacuum pump that is not equipped with a check valve is used, the vacuum pump oil may flow into the refrigerant cycle and cause the refrigerator oil to deteriorate.

Prepare tools for exclusive use with R 410A. Do not use the following tools if they have been used with the conventional refrigerant: gauge manifold, charging hose, gas leak detector, check valve, refrigerant charge base, vacuum gauge, and refrigerant recovery equipment.
If the refrigerant or the refrigerator oil that may be left on these tools are mixed in with R410A, it may cause the refrigerator oil in the new system to deteriorate. Infiltration of water may cause the refrigerator oil to deteriorate. Leak detectors for conventional refrigerants will not detect an R410A leak because R410A is free of chlorine.

Do not use a charging cylinder.
If a charging cylinder is used, the composition of the refrigerant in the cylinder will change and become unsuitable for use.

Exercise special care when handling tools for use with R410A.
Infiltration of dust, dirt, or water into the refrigerant system may cause the refrigerator oil to deteriorate.

CONTENTS

I Features
[1] Features 1

II Components and Functions
[1] Components and Functions 2

III Specifications
[1] Specifications 4
1.Specifications 4
2.Electrical component specifications 7

IV Outlines and Dimensions
[1] Outlines and Dimensions 8

V Wiring Diagram
[1] Wiring Diagram 10

VI Refrigerant System Diagram
[1] Refrigerant system diagram 11

VII Microprocessor Control
[1] Microprocessor Control 12
1.Cool operation 12
2.Dry operation 13
3.Fan operation 14
4.Heat operation 15
5.Auto operation [Automatic cool / heat change over operation] 16
6.When unit is stopped control mode 17
7.Heater control 17

VIII Troubleshooting
[1] Troubleshooting 21
1.Check methods 21
2.DC fan motor (fan motor/indoor control board) 25
3.Address switch setting 26
4.Voltage test points on the control board 27
5.Dipswitch setting (Factory setting) 28

IX Disassembly Procedure
[1] Disassembly Procedure 31
1.Control box 31
2.Thermistor (Intake air) 32
3.Drainpan 33
4.Thermistor (Gas pipe) (Liquid pipe) 34
5.Fan and fan motor 35
6.Heat exchanger 36

[1] Features

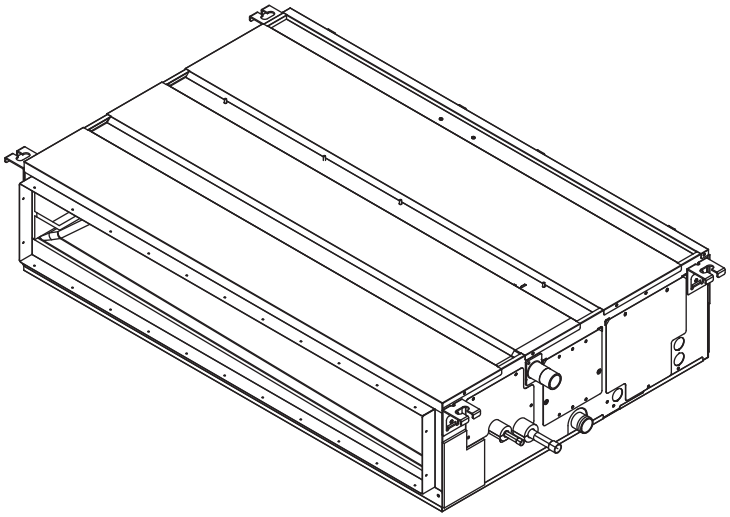

Model	Cooling capacity/Heating capacity	
	BTU/h	kW
PEFY-P06NMAU-E3	6000/6700	1.8/2.0
PEFY-P08NMAU-E3	8000/9000	2.3/2.6
PEFY-P12NMAU-E3	12000/13500	3.5/4.0
PEFY-P15NMAU-E3	15000/17000	4.4/5.0
PEFY-P18NMAU-E3	18000/20000	5.3/5.9
PEFY-P24NMAU-E3	24000/27000	7.0/7.9
PEFY-P27NMAU-E3	27000/30000	7.9/8.8
PEFY-P30NMAU-E3	30000/34000	8.8/10.0
PEFY-P36NMAU-E3	36000/40000	10.6/11.7
PEFY-P48NMAU-E3	48000/54000	14.1/15.8
PEFY-P54NMAU-E3	54000/60000	15.8/17.6

[1] Components and Functions

1. Indoor (Main) Unit

(1) In case of rear inlet

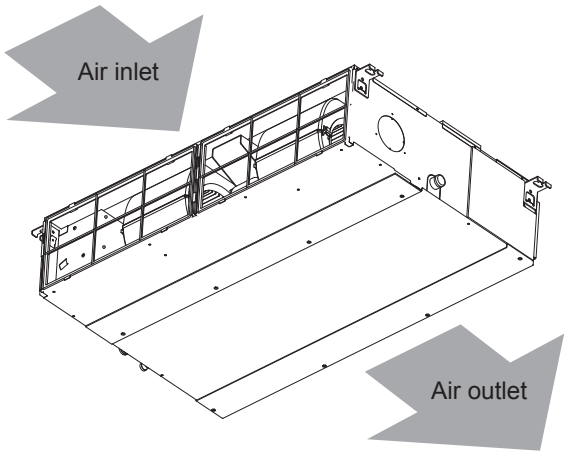

(2) In case of bottom inlet

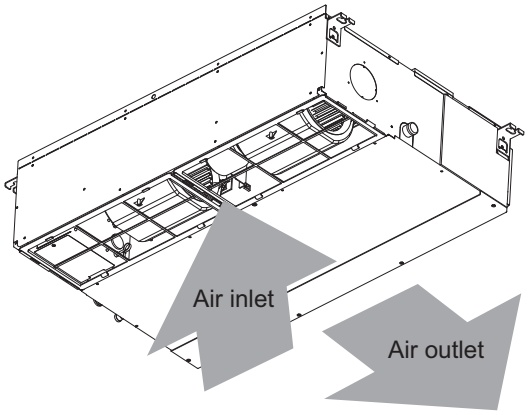

2. Remote Controller
   [PAR-21MAAU]
   Once the operation mode is selected, the unit will remain in the selected mode until changed.

(1) Remote Controller Buttons

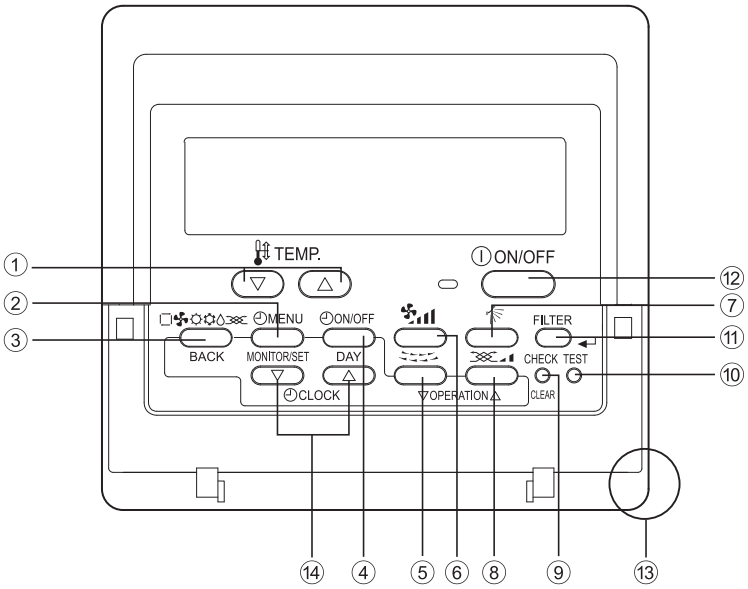

1	[Set Temperature] Button	7	[Vane Control] Button
2	[Timer Menu] Button [Monitor/Set] Button	8	[Ventilation] Button [Operation] Button
3	[Mode] Button [Back] Button	9	[Check/Clear] Button
		10	[Test Run] Button
4	[Timer On/Off] Button [Set Day] Button	11	[Filter] Button [↵] Button
5	[Louver] Button [Operation] Button	12	[ON/OFF] Button
		13	Position of built-in room thermistor
6	[Fan Speed] Button	14	[Set Time] Button

- Keep the remote controller out of direct sunlight to ensure accurate measurement of room temperature.
- The thermistor at the lower right-hand section of the remote controller must be free from obstructions to ensure accurate measurement of room temperature.

(2) Remote Controller Display

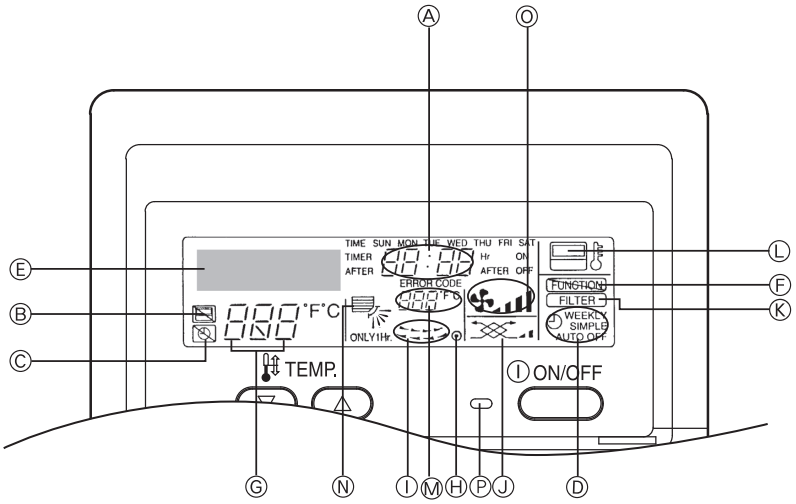

A	Current time/Timer time	I	Louver swing
B	Centralized control indicator	J	Ventilation
C	Timer OFF indicator	K	Filter sign
D	Timer mode indicator	L	Sensor position
E	Operation mode display: COOL, DRY, AUTO, FAN, HEAT	M	Room temperature
F	Function mode indicator	N	Vane setting
G	Preset temperature	O	Fan speed
H	Power indicator	P	Operation lamp

[1] Specifications

1. Specifications

Model			PEFY-P06NMAU-E3	PEFY-P08NMAU-E3	PEFY-P12NMAU-E3	PEFY-P15NMAU-E3
Power source			1-phase 208/230V 60Hz			
Cooling capacity (Nominal)	*1	BTU / h	6,000	8,000	12,000	15,000
	*1	kW	1.8	2.3	3.5	4.4
	Power input	kW	0.06	0.06	0.09	0.09
	Current input	A	0.56/0.52	0.56/0.52	0.66/0.62	0.67/0.63
Heating capacity (Nominal)	*2	BTU / h	6,700	9,000	13,500	17,000
	*2	kW	2.0	2.6	4.0	5.0
	Power input	kW	0.04	0.04	0.07	0.07
	Current input	A	0.45/0.41	0.45/0.41	0.55/0.51	0.56/0.52
External finish			Galvanized steel plate			
External dimension H x W x D		in.	9-7/8x27-9/16x28-7/8	9-7/8x27-9/16x28-7/8	9-7/8x27-9/16x28-7/8	9-7/8x35-7/16x28-7/8
		mm	250 x 700 x 732	250 x 700 x 732	250 x 700 x 732	250 x 900 x 732
Net weight		lbs (kg)	49(22)	49(22)	49(22)	58(26)
Heat exchanger			Cross fin(Aluminium fin and copper tube)			
FAN	Type x Quantity		Sirocco fan x 1	Sirocco fan x 1	Sirocco fan x 1	Sirocco fan x 1
	External static press.	in.WG	<0.14>-0.20-<0.28>-<0.40>-<0.60>			
		Pa	<35>-50-<70>-<100>-<150>			
	Motor type		DC motor			
	Motor output	kW	0.085	0.085	0.085	0.085
	Driving mechanism		Direct-driven by motor			
	Airflow rate (Low-Mid-High)	cfm	212-265-300	212-265-300	265-318-371	353-424-494
		m^3 / min	6.0-7.5-8.5	6.0-7.5-8.5	7.5-9.0-10.5	10.0-12.0-14.0
		L / s	100-125-142	100-125-142	125-150-175	167-200-233
Sound pressure level (Low-Mid-High) (measured in anechoic room)		dB <A>	26-28-29	26-28-29	28-30-34	28-30-34
Insulation material			EPS, Polyethylene foam,Urethane foam			
Air filter			PP honeycomb fabric			
Protection device			Fuse			
Refrigerant control device			LEV			
Connectable outdoor unit			R410A CITY MULTI			
Diameter of refrigerant pipe (O.D.)	Liquid (R410A)	in. (mm)	1/4 (6.35) Brazed	1/4 (6.35) Brazed	1/4 (6.35) Brazed	1/4 (6.35) Brazed
	Gas (R410A)	in. (mm)	1/2 (12.7) Brazed	1/2 (12.7) Brazed	1/2 (12.7) Brazed	1/2 (12.7) Brazed
Diameter of drain pipe		in. (mm)	O.D. 1-1/4(32)			
Drawing	External		KJ94C917			
	Wiring		KJ94C918			
	Refrigerant cycle		-			
Standard attachment	Document		Installation Manual, Instruction Book			
	Accessory		Washer, Drain hose, Tie band			
Optional parts	External heater adapter		PAC-YU25HT			
	Filter box		PAC-KE91TB-E	PAC-KE91TB-E	PAC-KE91TB-E	PAC-KE92TB-E
Remark	Installation		Details on foundation work, duct work, insulation work, electrical wiring, power source switch, and other items shall be referred to the Installation Manual. Due to continuing improvement, above specifications may be subject to change without notice.			

Note :	*1 Nominal cooling conditions	*2 Nominal heating conditions
Indoor :	80degF D.B. / 67degF W.B.	70degF D.B.
	(26.7degC D.B. / 19.4degC W.B.)	(21.1degC D.B.)
Outdoor :	95degF D.B.	47degF D.B. / 43degF W.B.
	(35degC D.B.)	(8.3degC D.B. / 6.1degC W.B.)
Pipe length :	25 ft. (7.6 m)	25 ft. (7.6 m)
Level difference :	0 ft. (0 m)	0 ft. (0 m)

*The external static pressure is set to 0.20in. WG(50Pa) at factory shipment.
*Due to continuing improvement, above specification may be subject to change without notice.

Unit convertor
kcal/h = kW x 860
BTU/h = kW x 3,412
cfm = m^3/min x 35.31
lbs = kg / 0.4536
*Above specification data is subject to rounding variation.

Model			PEFY-P18NMAU-E3	PEFY-P24NMAU-E3	PEFY-P27NMAU-E3	PEFY-P30NMAU-E3
Power source			1-phase 208/230V 60Hz			
Cooling capacity (Nominal)	*1	BTU / h	18,000	24,000	27,000	30,000
	*1	kW	5.3	7.0	7.9	8.8
	Power input	kW	0.11	0.17	0.17	0.17
	Current input	A	0.77/0.73	1.31/1.27	1.31/1.27	1.31/1.27
Heating capacity (Nominal)	*2	BTU / h	20,000	27,000	30,000	34,000
	*2	kW	5.9	7.9	8.8	10.0
	Power input	kW	0.09	0.15	0.15	0.15
	Current input	A	0.66/0.62	1.20/1.16	1.20/1.16	1.20/1.16
External finish			Galvanized steel plate			
External dimension H x W x D		in.	9-7/8x35-7/16x28-7/8	9-7/8x43-5/16x28-7/8	9-7/8x43-5/16x28-7/8	9-7/8x43-5/16x28-7/8
		mm	250 x 900 x 732	250 x 1100 x 732	250 x 1100 x 732	250 x 1100 x 732
Net weight		lbs (kg)	58(26)	67(30)	67(30)	67(30)
Heat exchanger			Cross fin(Aluminium fin and copper tube)			
FAN	Type x Quantity		Sirocco fan x 1	Sirocco fan x 2	Sirocco fan x 2	Sirocco fan x 2
	External static press.	in.WG	<0.14>-0.20-<0.28>-<0.40>-<0.60>			
		Pa	<35>-50-<70>-<100>-<150>			
	Motor type		DC motor			
	Motor output	kW	0.085	0.121	0.121	0.121
	Driving mechanism		Direct-driven by motor			
	Airflow rate (Low-Mid-High)	cfm	424-512-600	618-742-883	618-742-883	618-742-883
		m^3 / min	12.0-14.5-17.0	17.5-21.0-25.0	17.5-21.0-25.0	17.5-21.0-25.0
		L / s	200-242-283	292-350-417	292-350-417	292-350-417
Sound pressure level (Low-Mid-High) (measured in anechoic room)		dB <A>	28-32-35	30-34-39	30-34-39	30-34-39
Insulation material			EPS, Polyethylene foam,Urethane foam			
Air filter			PP honeycomb fabric			
Protection device			Fuse			
Refrigerant control device			LEV			
Connectable outdoor unit			R410A CITY MULTI			
Diameter of refrigerant pipe (O.D.)	Liquid (R410A)	in. (mm)	1/4 (6.35) Brazed	3/8 (9.52) Brazed	3/8 (9.52) Brazed	3/8 (9.52) Brazed
	Gas (R410A)	in. (mm)	1/2 (12.7) Brazed	5/8 (15.88) Brazed	5/8 (15.88) Brazed	5/8 (15.88) Brazed
Diameter of drain pipe		in. (mm)	O.D. 1-1/4(32)			
Drawing	External		KJ94C917			
	Wiring		KJ94C918			
	Refrigerant cycle		-			
Standard attachment	Document		Installation Manual, Instruction Book			
	Accessory		Washer, Drain hose, Tie band			
Optional parts	External heater adapter		PAC-YU25HT			
	Filter box		PAC-KE92TB-E	PAC-KE93TB-E	PAC-KE93TB-E	PAC-KE93TB-E
Remark	Installation		Details on foundation work, duct work, insulation work, electrical wiring, power source switch, and other items shall be referred to the Installation Manual. Due to continuing improvement, above specifications may be subject to change without notice.			

Note :	*1 Nominal cooling conditions	*2 Nominal heating conditions
Indoor :	80degF D.B. / 67degF W.B.	70degF D.B.
	(26.7degC D.B. / 19.4degC W.B.)	(21.1degC D.B.)
Outdoor :	95degF D.B.	47degF D.B. / 43degF W.B.
	(35degC D.B.)	(8.3degC D.B. / 6.1degC W.B.)
Pipe length :	25 ft. (7.6 m)	25 ft. (7.6 m)
Level difference :	0 ft. (0 m)	0 ft. (0 m)

*The external static pressure is set to 0.20in. WG(50Pa) at factory shipment.
*Due to continuing improvement, above specification may be subject to change without notice.

Unit convertor
kcal/h = kW x 860
BTU/h = kW x 3,412
cfm = m^3/min x 35.31
lbs = kg / 0.4536
*Above specification data is subject to rounding variation.

Model			PEFY-P36NMAU-E3	PEFY-P48NMAU-E3	PEFY-P54NMAU-E3	
Power source			1-phase 208/230V 60Hz			
Cooling capacity (Nominal)	*1	BTU / h	36,000	48,000	54,000	
	*1	kW	10.6	14.1	15.8	
	Power input	kW	0.24	0.34	0.36	
	Current input	A	1.50/1.46	2.08/2.04	2.24/2.20	
Heating capacity (Nominal)	*2	BTU / h	40,000	54,000	60,000	
	*2	kW	11.7	15.8	17.6	
	Power input	kW	0.22	0.32	0.34	
	Current input	A	1.39/1.35	1.97/1.93	2.13/2.09	
External finish			Galvanized steel plate			
External dimension H x W x D		in.	9-7/8x55-1/8x28-7/8	9-7/8x55-1/8x28-7/8	9-7/8x63x28-7/8	
		mm	250 x 1400 x 732	250 x 1400 x 732	250 x 1600 x 732	
Net weight		lbs (kg)	86(39)	86(39)	93(42)	
Heat exchanger			Cross fin(Aluminium fin and copper tube)			
FAN	Type x Quantity		Sirocco fan x 2	Sirocco fan x 2	Sirocco fan x 2	
	External static press.	in.WG	<0.14>-0.20-<0.28>-<0.40>-<0.60>			
		Pa	<35>-50-<70>-<100>-<150>			
	Motor type		DC motor			
	Motor output	kW	0.244	0.244	0.244	
	Driving mechanism		Direct-driven by motor			
	Airflow rate (Low-Mid-High)	cfm	812-989-1165	989-1201-1412	1042-1254-1483	
		m^3 / min	23.0-28.0-33.0	28.0-34.0-40.0	29.5-35.5-42.0	
		L / s	383-467-550	467-567-667	492-592-700	
Sound pressure level (Low-Mid-High) (measured in anechoic room)		dB <A>	32-37-41	35-40-44	36-41-45	
Insulation material			EPS, Polyethylene foam,Urethane foam			
Air filter			PP honeycomb fabric			
Protection device			Fuse			
Refrigerant control device			LEV			
Connectable outdoor unit			R410A CITY MULTI			
Diameter of refrigerant pipe (O.D.)	Liquid (R410A)	in. (mm)	3/8 (9.52) Brazed	3/8 (9.52) Brazed	3/8 (9.52) Brazed	
	Gas (R410A)	in. (mm)	5/8 (15.88) Brazed	5/8 (15.88) Brazed	5/8 (15.88) Brazed	
Diameter of drain pipe		in. (mm)	O.D. 1-1/4(32)			
Drawing	External		KJ94C917			
	Wiring		KJ94C918			
	Refrigerant cycle		-			
Standard attachment	Document		Installation Manual, Instruction Book			
	Accessory		Washer, Drain hose, Tie band			
Optional parts	External heater adapter		PAC-YU25HT			
	Filter box		PAC-KE94TB-E	PAC-KE94TB-E	PAC-KE95TB-E	
Remark	Installation		Details on foundation work, duct work, insulation work, electrical wiring, power source switch, and other items shall be referred to the Installation Manual. Due to continuing improvement, above specifications may be subject to change without notice.			

Note :	*1 Nominal cooling conditions	*2 Nominal heating conditions
Indoor :	80degF D.B. / 67degF W.B.	70degF D.B.
	(26.7degC D.B. / 19.4degC W.B.)	(21.1degC D.B.)
Outdoor :	95degF D.B.	47degF D.B. / 43degF W.B.
	(35degC D.B.)	(8.3degC D.B. / 6.1degC W.B.)
Pipe length :	25 ft. (7.6 m)	25 ft. (7.6 m)
Level difference :	0 ft. (0 m)	0 ft. (0 m)

*The external static pressure is set to 0.20in. WG(50Pa) at factory shipment.
*Due to continuing improvement, above specification may be subject to change without notice.

Unit convertor
kcal/h = kW x 860
BTU/h = kW x 3,412
cfm = m^3/min x 35.31
lbs = kg / 0.4536
*Above specification data is subject to rounding variation.

2. Electrical component specifications

Component	Sym-bol	PEFY-P06NMAU-E3	PEFY-P08NMAU-E3	PEFY-P12NMAU-E3
Room temperature thermistor	TH21	Resistance 0°C/15kΩ, 10°C/9.6kΩ, 20°C/6.3kΩ, 25°C/5.4kΩ, 30°C/4.3kΩ, 40°C/3.0kΩ		
Liquid pipe thermistor	TH22	Resistance 0°C/15kΩ, 10°C/9.6kΩ, 20°C/6.3kΩ, 25°C/5.4kΩ, 30°C/4.3kΩ, 40°C/3.0kΩ		
Gas pipe thermistor	TH23	Resistance 0°C/15kΩ, 10°C/9.6kΩ, 20°C/6.3kΩ, 25°C/5.4kΩ, 30°C/4.3kΩ, 40°C/3.0kΩ		
Fuse	FUSE	250V 6.3A		
Fan motor		8-pole, Output 85W SIC-70CW-D885-1		
Linear expansion valve	LEV	12VDC Stepping motor drive port diameter ø3.2 (0~2000 pulse)		
Power supply terminal block	TB2	(L1, L2, G) 250V 20A		
Transmission terminal block	TB5 TB15	(1, 2) 250V 15A, (M1, M2, S) 250V 20A		
Drain float switch	DS	Open/short detection Initial contact resistance 500 mΩ or less		

Component	Sym-bol	PEFY-P15NMAU-E3	PEFY-P18NMAU-E3	PEFY-P24NMAU-E3	PEFY-P27NMAU-E3	PEFY-P30NMAU-E3
Room temperature thermistor	TH21	Resistance 0°C/15kΩ, 10°C/9.6kΩ, 20°C/6.3kΩ, 25°C/5.4kΩ, 30°C/4.3kΩ, 40°C/3.0kΩ				
Liquid pipe thermistor	TH22	Resistance 0°C/15kΩ, 10°C/9.6kΩ, 20°C/6.3kΩ, 25°C/5.4kΩ, 30°C/4.3kΩ, 40°C/3.0kΩ				
Gas pipe thermistor	TH23	Resistance 0°C/15kΩ, 10°C/9.6kΩ, 20°C/6.3kΩ, 25°C/5.4kΩ, 30°C/4.3kΩ, 40°C/3.0kΩ				
Fuse	FUSE	250V 6.3A				
Fan motor		8-pole, Output 85W SIC-70CW-D885-2		8-pole, Output 121W SIC-70CW-D8121-1		
Linear expansion valve	LEV	12VDC Stepping motor drive port diameter ø3.2 (0~2000 pulse)				
Power supply terminal block	TB2	(L1, L2, G) 250V 20A				
Transmission terminal block	TB5 TB15	(1, 2) 250V 15A, (M1, M2, S) 250V 20A				
Drain float switch	DS	Open/short detection Initial contact resistance 500 mΩ or less				

Component	Sym-bol	PEFY-P36NMAU-E3	PEFY-P48NMAU-E3	PEFY-P54NMAU-E3
Room temperature thermistor	TH21	Resistance 0°C/15kΩ, 10°C/9.6kΩ, 20°C/6.3kΩ, 25°C/5.4kΩ, 30°C/4.3kΩ, 40°C/3.0kΩ		
Liquid pipe thermistor	TH22	Resistance 0°C/15kΩ, 10°C/9.6kΩ, 20°C/6.3kΩ, 25°C/5.4kΩ, 30°C/4.3kΩ, 40°C/3.0kΩ		
Gas pipe thermistor	TH23	Resistance 0°C/15kΩ, 10°C/9.6kΩ, 20°C/6.3kΩ, 25°C/5.4kΩ, 30°C/4.3kΩ, 40°C/3.0kΩ		
Fuse	FUSE	250V 6.3A		
Fan motor		8-pole, Output 244W SIC-101CW-D8244-1		
Linear expansion valve	LEV	12VDC Stepping motor drive port diameter ø3.2 (0~2000 pulse)		
Power supply terminal block	TB2	(L1, L2, G) 250V 20A		
Transmission terminal block	TB5 TB15	(1, 2) 250V 15A, (M1, M2, S) 250V 20A		
Drain float switch	DS	Open/short detection Initial contact resistance 500 mΩ or less		

[1] Outlines and Dimensions

1. PEFY-P06, 08, 12, 15, 18, 24, 27, 30, 36, 48, 54NMAU-E3

Unit : mm(in.)

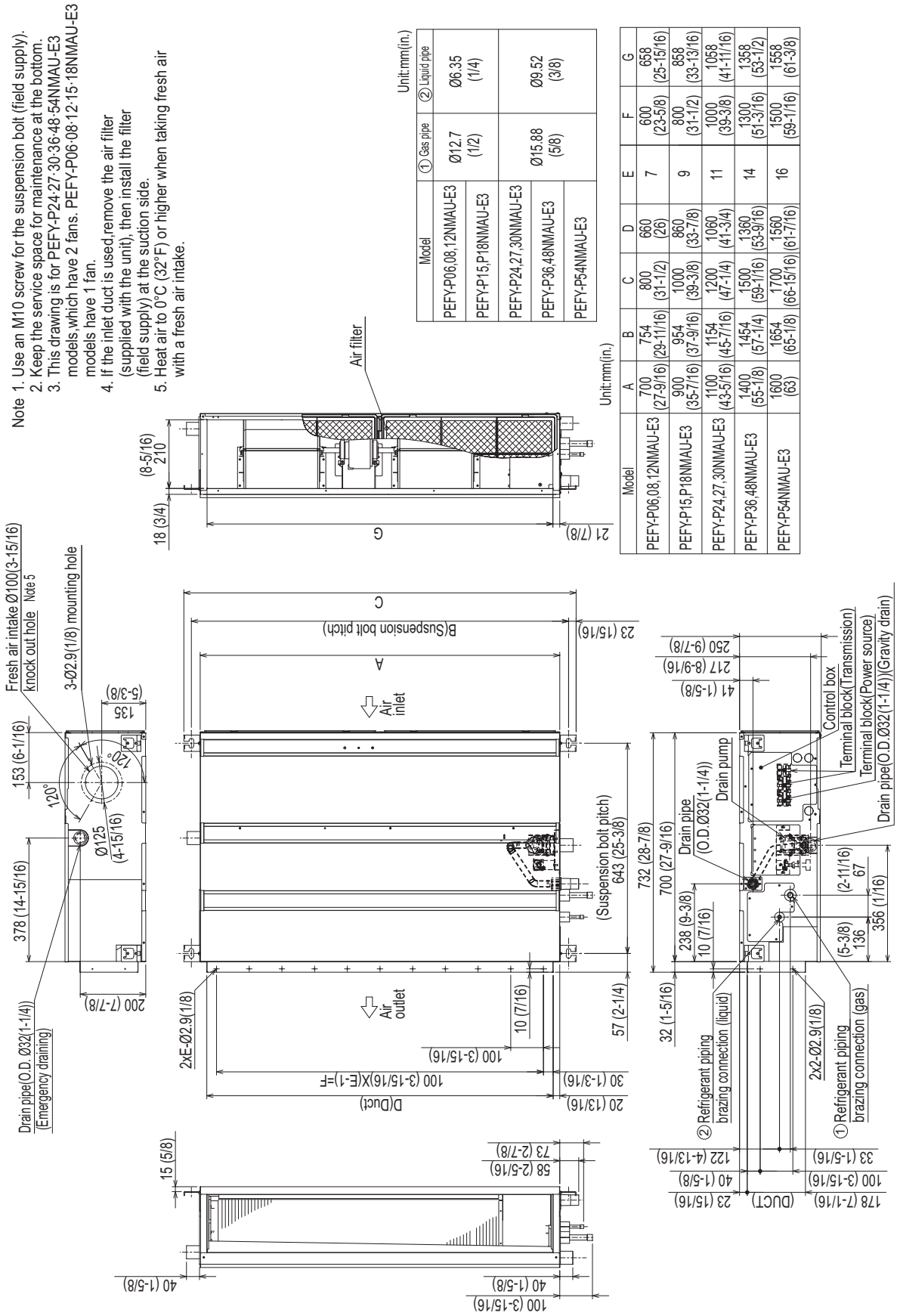

Unit:mm(in.)

Model	① Gas pipe	② Liquid pipe
PEFY-P06,08,12NMAU-E3	Ø12.7 (1/2)	Ø6.35 (1/4)
PEFY-P15,P18NMAU-E3		
PEFY-P24,27,30NMAU-E3	Ø15.88 (5/8)	Ø9.52 (3/8)
PEFY-P36,48NMAU-E3		
PEFY-P54NMAU-E3		

Unit:mm(in.)

Model	A	B	C	D	E	F	G
PEFY-P06,08,12NMAU-E3	700 (27-9/16)	754 (29-11/16)	800 (31-1/2)	660 (26)	7	600 (23-5/8)	658 (25-15/16)
PEFY-P15,P18NMAU-E3	900 (35-7/16)	954 (37-9/16)	1000 (39-3/8)	860 (33-7/8)	9	800 (31-1/2)	858 (33-13/16)
PEFY-P24,27,30NMAU-E3	1100 (43-5/16)	1154 (45-7/16)	1200 (47-1/4)	1060 (41-3/4)	11	1000 (39-3/8)	1058 (41-11/16)
PEFY-P36,48NMAU-E3	1400 (55-1/8)	1454 (57-1/4)	1500 (59-1/16)	1360 (53-9/16)	14	1300 (51-3/16)	1358 (53-1/2)
PEFY-P54NMAU-E3	1600 (63)	1654 (65-1/8)	1700 (66-15/16)	1560 (61-7/16)	16	1500 (59-1/16)	1558 (61-3/8)

[Maintenance access space]

Secure enough access space to allow for the maintenance, inspection, and replacement of the motor, fan, drain pump, heat exchanger, and electric box in one of the following ways.
Select an installation site for the indoor unit so that it's maintenance access space will not be obstructed by beams or other objects.

(1) When a space of 300mm or more is available below the unit between the unit and the ceiling. (Fig.1)
- Create access door 1 and 2 (450x450mm each) as shown in Fig.2.
(Access door 2 is not required if enough space is available below the unit for a maintenance worker to work in.)

(2) When a space of less than 300mm is available below the unit between the unit and the ceiling.
(At least 20mm of space should be left below the unit as shown in Fig.3.)
- Create access door 1 diagonally below the electric box and access door 3 below the unit as shown in Fig.4.
or
- Create access door 4 below the electric box and the unit as shown in Fig.5.

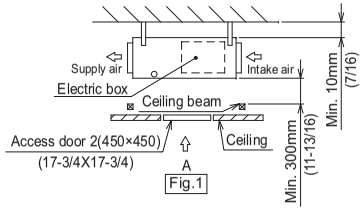

Fig.1

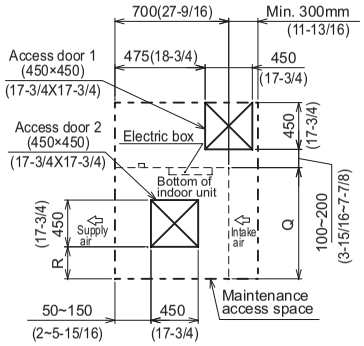

Fig.2 (Viewed from the direction of the arrow A)

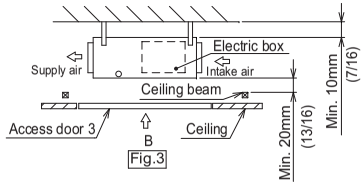

Fig.3

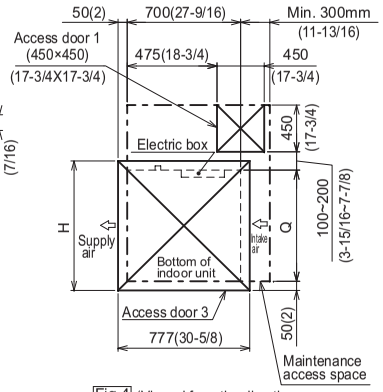

Fig.4 (Viewed from the direction of the arrow B)

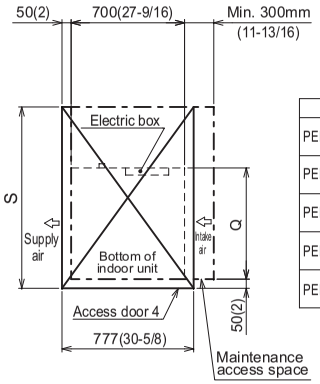

Fig.5 (Viewed from the direction of the arrow B)

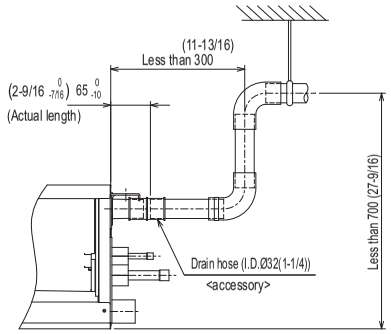

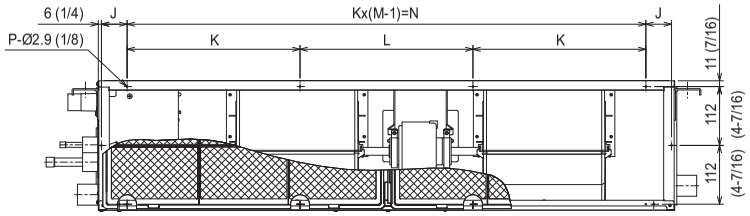

Unit : mm(in.)

Unit:mm(in.)

Model	H	J	K	L	M	N	P	Q	R	S
PEFY-P06,08,12NMAU-E3	800 (31-1/2)	44 (1-3/4)	150 (5-15/16)	300 (11-13/16)			10	700 (27-9/16)	50~150 (2)~(5-15/16)	1300 (51-3/16)
PEFY-P15,18NMAU-E3	1000 (39-3/8)	54 (2-3/16)	260 (10-1/4)		4	780 (30-3/4)	10	900 (35-7/16)	150~250 (5-15/16)~(9-7/8)	1500 (59-1/16)
PEFY-P24,27,30NMAU-E3	1200 (47-1/4)	49 (1-15/16)	330 (13)		4	990 (39)	10	1100 (43-5/16)	250~350 (9-7/8)~(13-13/16)	1700 (66-15/16)
PEFY-P36,48NMAU-E3	1500 (59-1/16)	54 (2-3/16)	320 (12-5/8)		5	1280 (50-7/16)	12	1400 (55-1/8)	400~500 (15-3/4)~(19-11/16)	2000 (78-3/4)
PEFY-P54NMAU-E3	1700 (66-15/16)	54 (2-3/16)	370 (14-5/8)		5	1480 (58-5/16)	12	1600 (63)	500~600 (19-11/16)~(23-5/8)	2200 (86-5/8)

[1] Wiring Diagram

1. PEFY-P06, 08, 12, 15, 18, 24, 27, 30, 36, 48, 54NMAU-E3

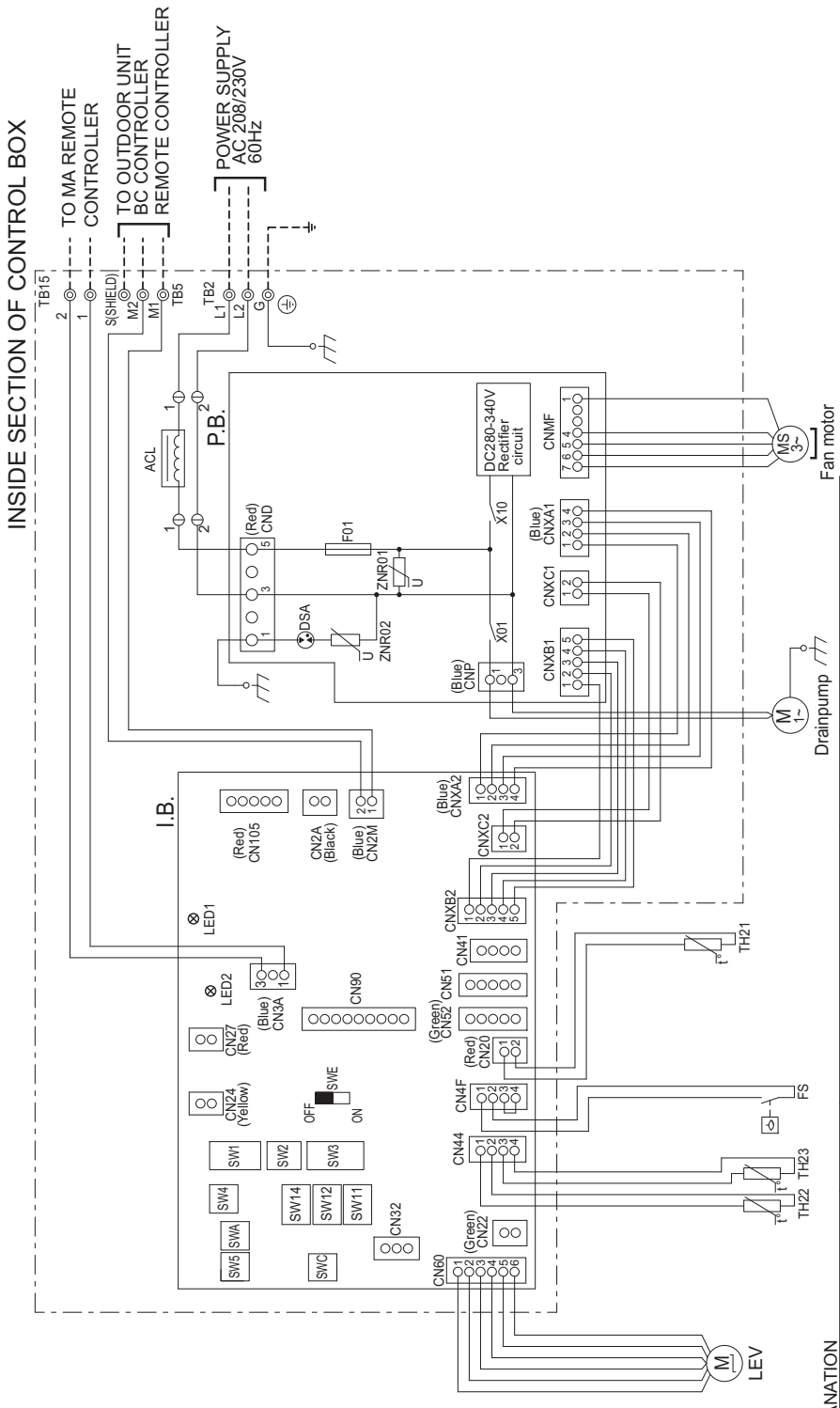

NOTE:1.Symbols used in wiring diagram above are,
◑:Connector
◎:Terminal
-----(Heavy dotted line):Field wiring
2.Use copper supply wires.

SYMBOL EXPLANATION

SYMBOL	NAME	SYMBOL	NAME	SYMBOL	NAME
I.B.	Indoor controller board	CN27	Connector (Damper)	SW2 (I.B.)	Switch (for capacity code)
P.B.	Power supply board	CN32	Connector (Remote switch)	SW3 (I.B.)	Switch (for mode selection)
TB2	Power source terminal block	CN41	Connector (HA terminal-A)	SW4 (I.B.)	Switch (for model selection)
TB5	Transmission terminal block	CN51	Connector (Centrally control)	SW5 (I.B.)	Switch (for mode selection)
TB15	Transmission terminal block	CN52	Connector (Remote indication)	SW11 (I.B.)	Switch (1s digit address set)
F01	Fuse AC250V 6.3A	CN90	Connector (Wireless)	SW12 (I.B.)	Switch (10ths digit address set)
ZNR01,02	Varistor	CN105	Connector (IT terminal)	SW14 (I.B.)	Switch (connection No.set)
DSA	Arrester	CN2A	Connector (0-10V Analog input)	SWA (I.B.)	Switch (for static pressure selection)
X01	Aux. relay	FS	Float switch	SWC (I.B.)	Switch (for static pressure selection)
X10	Aux. relay	TH21	Thermistor (inlet air temp.detection)	SWE (I.B.)	Connector (emergency operation)
ACL	AC reactor (Power factor improvement)	TH22	Thermistor (piping temp.detection/liquid)	LED1	LED (Power supply)
CN22	Connector (Fan control)	TH23	Thermistor (piping temp.detection/gas)	LED2	LED (Remote controller supply)
CN24	Connector (Heater control)	SW1 (I.B.)	Switch (for mode selection)		

[1] Refrigerant system diagram

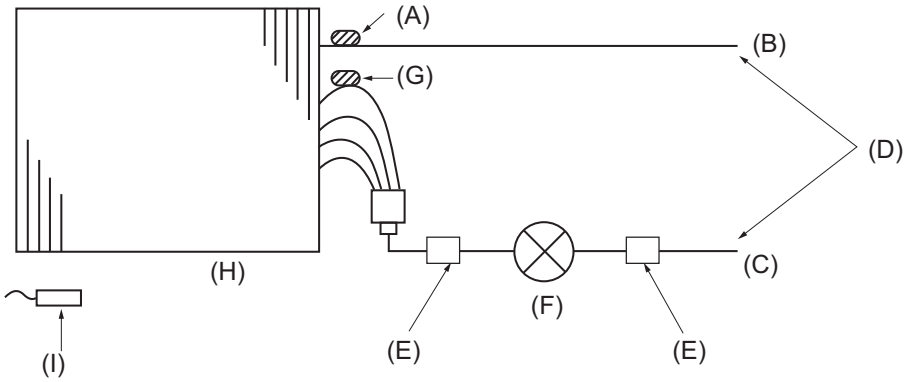

(A) Gas pipe thermistor TH23

(B) Gas pipe

(C) Liquid pipe

(D) Brazed connections

(E) Strainer (#100 mesh)

(F) Linear expansion valve

(G) Liquid pipe thermistor TH22

(H) Heat exchanger

(I) Room temperature thermistor TH21

Capacity	PEFY-P06, 08, 12, 15, 18NMAU-E3	PEFY-P24, 27, 30, 36, 48, 54NMAU-E3
Gas pipe	ø12.7 [1/2]	ø15.88 [5/8]
Liquid pipe	ø6.35 [1/4]	ø9.52 [3/8]

[1] Microprocessor Control

1. Cool operation

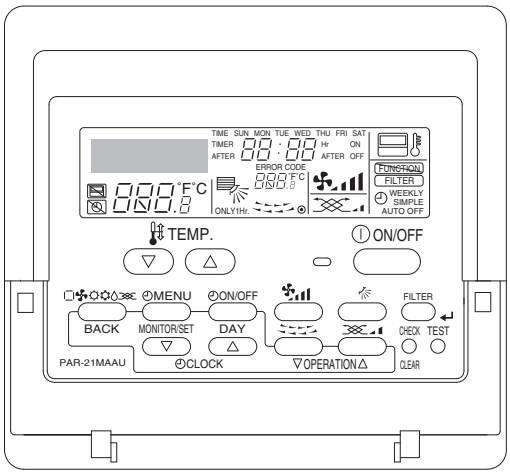

<How to operate>

1. Press POWER [ON/OFF] button.
2. Press the operation [Mode] button to display COOL.
3. Press the [Set Temperature] button to set the desired temperature.

Note

The set temperature changes 2°F when the [Set Temperature] button is pressed one time. Cooling 67 to 87°F

1. Termoregulating function

(1) Thermoregulating function (Function to prevent restarting for 3 minutes)

- Room temperature ≥ desired temperature + 2°F …Thermo ON
- Room temperature ≤ desired temperature …Thermo OFF

(2) Anti-freezing control

- Detected condition :

When the liquid pipe temp. (TH22) is 33.8°F or less in 16 minutes from compressors start up, anti-freezing control starts and the thermo OFF.

- Released condition :

The timer which prevents reactivating is set for 3 minutes, and anti-freezing control is cancelled when any one of the following conditions is satisfied.

1) Liquid pipe temp. (TH22) turns 50°F or above.
2) The condition of the thermo OFF has become complete by thermoregulating, etc.
3) The operation modes became mode other than COOL.
4) The operation stopped.

2. Fan

(1) By the remote controller setting (switch of 3 speeds+Auto)

Type	Fan speed notch
3 speeds + Auto type	[Low], [Med], [High], [Auto]

- When [Auto] is set, fan speed is changed depending on the value of: Room temperature - Desired temperature

3. Drain pump

(1) Drain pump control

- Always drain pump ON during the COOL and DRY mode operation. (Regardless of the thermo ON/ OFF)
- When the operation mode has changed from the COOL or DRY to the others (including Stop), OFF the control after the drain pump ON for 3 minutes.

(2) Float switch control

- Float switch control judges whether the sensor is in the air or in the water by turning the float switch ON/OFF.

In the water : Detected that the float switch is ON for 15 seconds.

In the air : Detected that the float switch is OFF for 15 seconds.

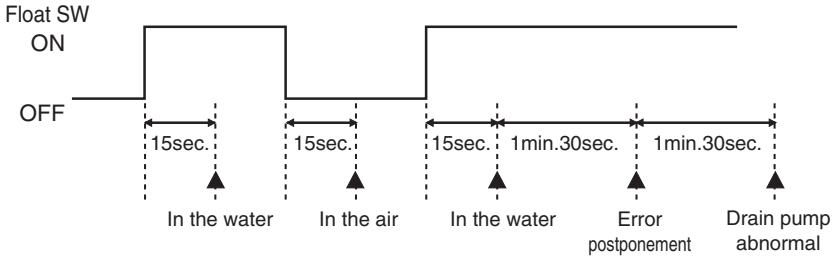

2. Dry operation

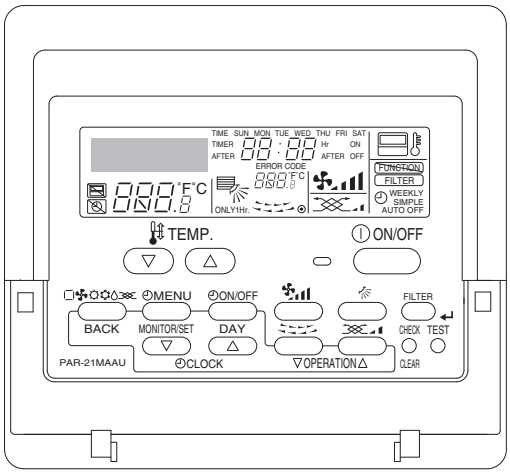

<How to operate>

1. Press POWER [ON/OFF] button.
2. Press the operation [Mode] button to display DRY.
3. Press the [Set Temperature] button to set the desired temperature.

Note

The set temperature changes 2°F when the [Set Temperature] button is pressed one time. Dry 67 to 87°F

1. Termoregulating function

(1) Thermo regulating function (Function to prevent restarting for 3 minutes)

•Setting the Dry thermo by the thermo regulating signal and the room temperature (TH21).
Dry thermo ON Room temperature ≥ desired temperature + 2°F
Dry thermo OFF Room temperature ≤ desired temperature

Room temperature	3 min. passed since starting operation		Dry thermo ON time (min)	Dry thermo OFF time (min)
	Thermo regulating signal	Room temperature (T1)		
Over 64°F	ON	T1 ≥ 83°F	9	3
		83°F > T1 ≥ 79°F	7	3
		79°F > T1 ≥ 75°F	5	3
		75°F > T1	3	3
	OFF	Unconditional	3	10
Less than 64°F	Dry thermo OFF			

(2) Frozen prevention control

•No control function

2. Fan

(1) Indoor fan operation controlled depends on the compressor conditions.

Dry thermo	Fan speed notch	
ON	[Low]	
OFF	Excluding the following	Stop
	Room temp. < 64°F	[Low]

Note

Remote controller setting is not acceptable.

3. Drain pump

(1) Same control as COOL operation

3. Fan operation

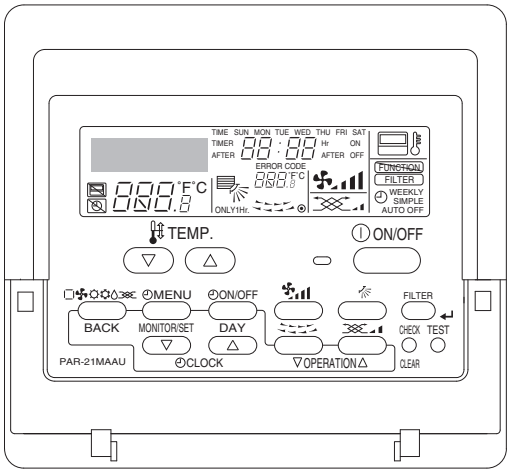

<How to operate>

1. Press POWER [ON/OFF] button.
2. Press the operation [Mode] button to display FAN.

1. Fan

(1) Set by remote controller.

Type	Fan speed notch
3 speeds + Auto type	[Low], [Med], [High], [Auto]

♦When [Auto] is set, fan speed becomes [Low].

2. Drain pump

(1) Drain pump control

♦The drain pump turns ON for the specified amount of time when any of the following conditions is met:

1) ON for 3 minutes after the operation mode is switched from COOL or DRY to another operation mode (FAN).
2) ON for 6 minutes after the float switch is submerged in the water when the float switch control judges the sensor is in the water.

(2) Float switch control

♦Float switch control judges whether the sensor is in the air or in the water by turning the float switch ON/OFF.

In the water : Detected that the float switch is ON for 15 seconds.

In the air : Detected that the float switch is OFF for 15 seconds.

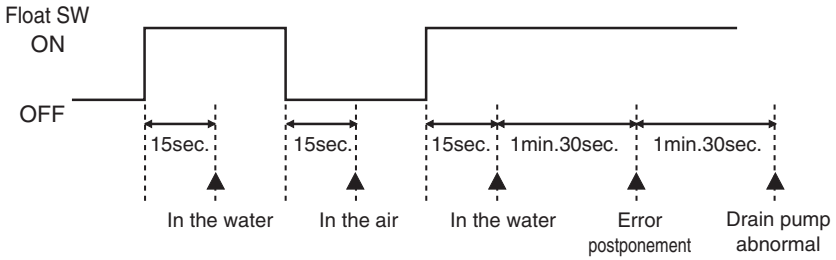

4. Heat operation

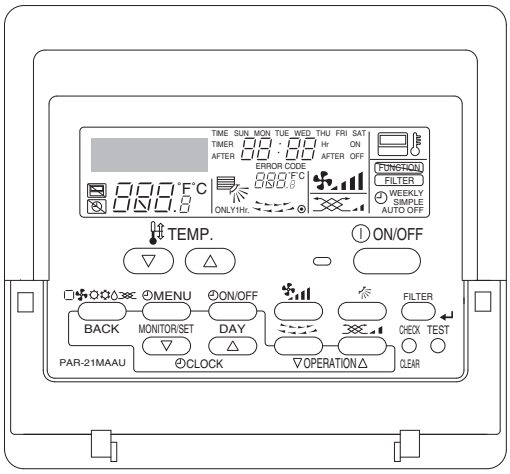

<How to operate>

1. Press POWER [ON/OFF] button.
2. Press the operation [Mode] button to display HEAT.
3. Press the [Set Temperature] button to set the desired temperature.

Note

The set temperature changes 2°F when the [Set Temperature] button is pressed one time. Heating 63 to 83°F.

<Display in HEAT operation>

[DEFROST]
The [DEFROST] symbol is only displayed during the defrost operation.
[STANDBY]
The [STANDBY] symbol is only displayed during the hot adjust mode.

1. Termoregulating function

(1) Thermoregulating function (Function to prevent restarting for 3 minutes)

- Room temperature ≤ desired temperature -2°F …Thermo ON
- Room temperature ≥ desired temperature …Thermo OFF

2. Fan

(1) By the remote controller setting (switch of 3 speeds+Auto)

Type	Fan speed notch
3 speeds + Auto type	[Low], [Med], [High], [Auto]

- When [Auto] is set, fan speed is changed depending on the value of:
  Desired temperature - Room temperature
  Give priority to under-mentioned controlled mode

1) Hot adjust mode
2) Preheating exclusion mode
3) Thermo OFF mode (When the compressor off by the thermoregulating)
4) Cool air prevention mode (Defrosting mode)
5) Capacity increasing mode

(2) Hot adjust mode

- The fan controller becomes the hot adjuster mode for the following conditions.

1) When starting the HEAT operation
2) When the thermoregulating function changes from OFF to ON.
3) When release the HEAT defrosting operation

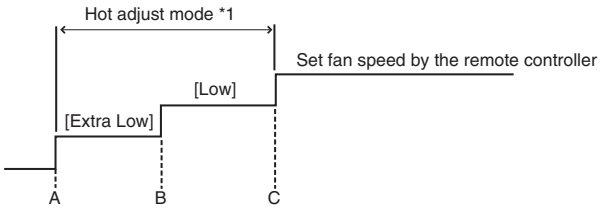

A: Hot adjust mode starts.
B: 5 minutes have passed since the condition A or the indoor liquid pipe temperature turned 95°F or more.
C: 2 minutes have passed since the condition A. (Terminating the hot adjust mode)

Note

*1 "STAND BY" will be displayed during the hot adjust mode.

(3) Preheating exclusion mode

- When the condition changes the auxiliary heater ON to OFF (thermoregulating or operation stop, etc.), the indoor fan operates in [Low] mode for 1 minute.

Note

This control is same for the model without auxiliary heater.

(4) Thermo OFF mode

- When the thermoregulating function changes to OFF, the indoor fan operates in [Extra low].

(5) Heat defrosting mode

- The indoor fan stops.

3. Drain pump

(1) Drain pump control

- The drain pump turns ON for the specified amount of time when any of the following conditions is met:

1) ON for 3 minutes after the operation mode is switched from COOL or DRY to another operation mode (FAN).
2) ON for 6 minutes after the float switch is submerged in the water when the float swich control judges the sensor is in the water.

(2) Float switch control

- Float switch control judges whether the sensor is in the air or in the water by turning the float switch ON/OFF.

In the water : Detected that the float switch is ON for 15 seconds.
In the air : Detected that the float switch is OFF for 15 seconds.

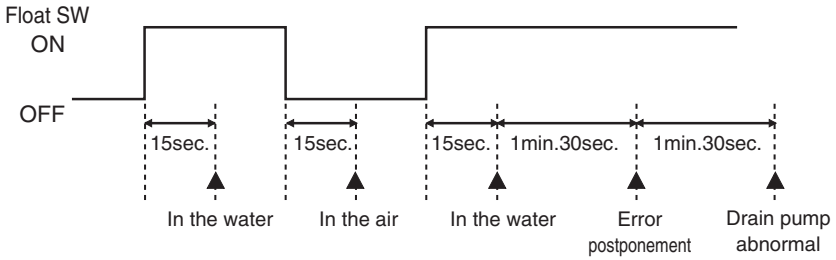

5. Auto operation [Automatic cool / heat change over operation]

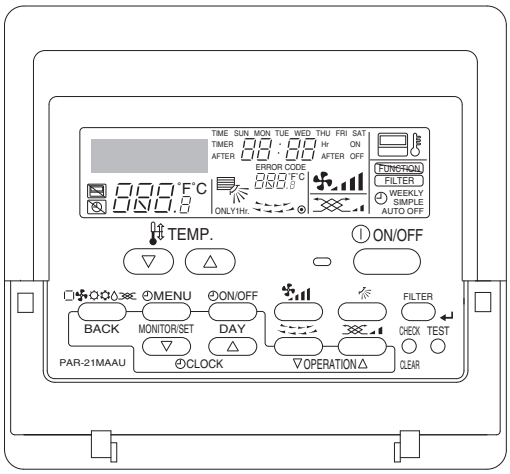

<How to operate>

1. Press POWER [ON/OFF] button.
2. Press the operation [Mode] button to display AUTO.
3. Press the [Set Temperature] button to set the desired temperature.

Note

The set temperature changes 2°F when the [Set Temperature] button is pressed one time. Automatic 67 to 83°F

1. Initial value of operation mode

(1) HEAT mode for room temperature < Desired temperature
(2) COOL mode for room temperature ≥ Desired temperature

2. Mode change

(1) HEAT mode -> COOL mode
Room temperature ≥ Desired temperature + 3°F. or 3 min. has passed
(2) COOL mode -> HEAT mode
Room temperature ≤ Desired temperature - 3°F. or 3 min. has passed

3. COOL mode

(1) Same control as cool operation

4. HEAT mode
(1) Same control as heat operation
The value "3°F" is modifiable from 1.8°F to 9°F by maintenance tool.

6. When unit is stopped control mode

1. Drain pump
(1) Drain pump control
- The drain pump turns ON for the specified amount of time when any of the following conditions is met:

1) ON for 3 minutes after the operation mode is switched from COOL or DRY to another operation mode (FAN).
2) ON for 6 minutes after the float switch is submerged in the water when the float switch control judges the sensor is in the water.

(2) Float switch control
- Float switch control judges whether the sensor is in the air or in the water by turning the float switch ON/OFF.

In the water : Detected that the float switch is ON for 15 seconds.
In the air : Detected that the float switch is OFF for 15 seconds.

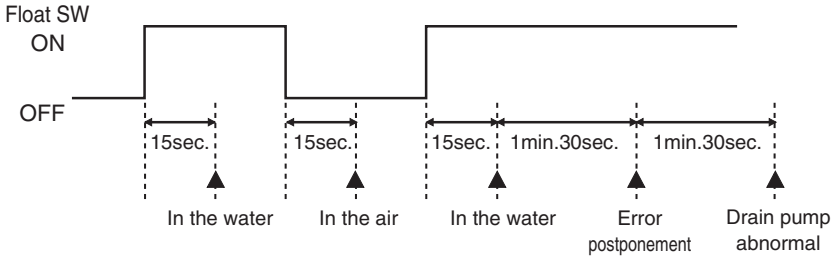

7. Heater control

1. Control specifications and DIP S/W setting
- Table 1 shows how the field-installed heater is controlled. Select the desired pattern in the table below, and set the DIP S/W on the outdoor and indoor units as shown in Table 1. Table 2 shows Heater Control patterns #A and B.

Table.1

<table>
<tr><th>Outdoor unit setting</th><th colspan="2">Condition of outdoor unit</th><th colspan="2">Ducted unit (PEFY-NMSU-E, PEFY-NMH(S)U-E, PEFY-NMAU-E3, PFFY-NEMU-E, PFFY-NRMU-E)</th><th>NON duct unit (PL/PK/PC)</th></tr>
<tr><td rowspan="2">DIP S/W OFF
In the case of:
TGMU:
S/W5-2 OFF
THMU/YHMU/
TJMU/YJMU:
S/W5-10 OFF
TKMU/YKMU:
SW4: 932 OFF
PUMY:
S/W4-4 OFF</td><td colspan="2" rowspan="2">N / A</td><td>DIP S/W3-4
OFF
(Indoor unit)</td><td>Heater control #A
(defrost/error:
Heater OFF)</td><td rowspan="2">Heater control #A
(defrost/error:
Heater ON)</td></tr>
<tr><td>DIP S/W3-4
ON
(Indoor unit)</td><td>Heater control #A
(defrost/error:
Heater ON)</td></tr>
<tr><td rowspan="3">DIP S/W ON
In the case of:
TGMU:
S/W5-2 ON
THMU/YHMU/
TJMU/YJMU:
S/W5-10 ON
TKMU/YKMU:
SW4: 932 ON
PUMY:
S/W4-4 ON</td><td rowspan="3"> 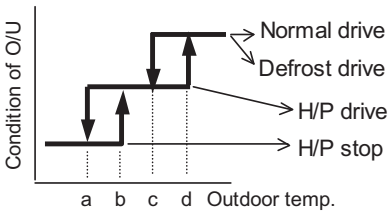

Parameters a/b/c/d are set by maintenance tool.</td><td>Normal drive</td><td colspan="2">Heater OFF</td><td>Heater OFF</td></tr>
<tr><td rowspan="2">Defrost drive
H/P drive
H/P stop</td><td>DIP S/W3-4
OFF
(Indoor unit)</td><td>Heater control #A
(defrost/error:
Heater OFF)</td><td rowspan="2">Heater control #B
(defrost/error:
Heater ON)</td></tr>
<tr><td>DIP S/W3-4
ON
(Indoor unit)</td><td>Heater control #B
(defrost/error:
Heater ON)</td></tr>
</table>

Table.2

Heater control #A	Heater OFF Inlet air temp. ≥ set temp. Heater ON Inlet air temp. < set temp.-4°F	Heater control #B	Heater OFF Inlet air temp. ≥ set temp. Heater ON Inlet air temp. < set temp.-1.8°F

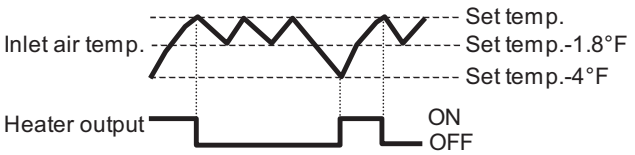

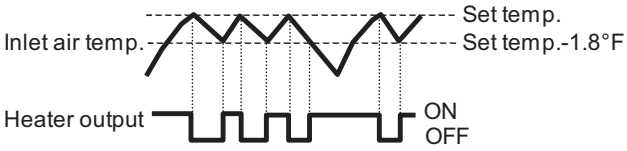

Note

<For heater>
The value "4°F" is modifiable from 1.8°F to 9°F by maintenance tool.

Note

(1) On the ducted model units (except the Fresh air intake type), turning on the heater with the fan setting set to OFF requires that the DIP S/W and connectors on the indoor units*1 are set on site.
*1: DIP SW 3-4, CN24, and CN4Y (or CN22)

Fan control

Pattern	Duct unit PE/PF-NR(NL) (PEFY-NMSU-E, PEFY-NMAU-E3)		
	CN4Y or CN22 for FAN control (YU25)	DIP S/W3-4 (Indoor unit)	Fan in defrost
1	Disabled	OFF	Stop (Heater OFF)
2		ON	L / LL / Set*1(Heater ON)
3	Enabled	OFF	Stop (Heater OFF)
4		ON	Stop (Heater ON)

*1. depend on SW1-7/1-8

SW3-1	SW1-7	SW1-8	Fan speed*1
OFF	OFF	OFF	Very low
OFF	ON	OFF	Low
OFF	OFF	ON	Remote controller setting
OFF	ON	ON	Stop (Remote controller setting*2)
ON	ON	ON	Stop (Remote controller setting*2)

*1. The fan operates at the same speed settings as shown in this table during the Heating Thermo-OFF mode.

*2. If Pattern 2 in the table above is selected for the fan control pattern, the fan will follow the setting of the remote controller.

<Image>

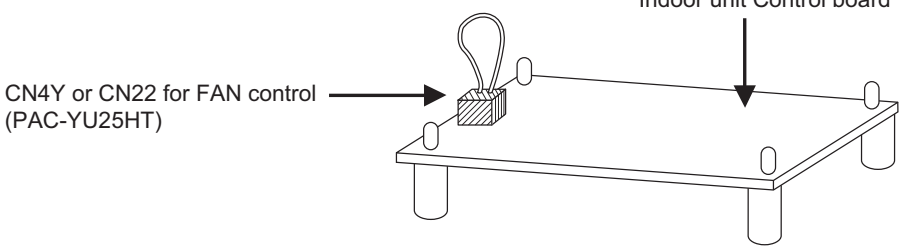

(2) On the Fresh air intake type units, the heater cannot be turned on with the fan setting set to OFF.

(3) Non-ducted models do not require the settings described in Note (1) above.

•Reference (not applicable to the ducted models)

Pattern	NON duct unit (PL/PK/PC)		
	CN4Y or CN22 for FAN control (YU25)*1	DIP S/W (Indoor unit)	Fan in defrost
1	N/A	N/A	Stop (Heater ON)

*1. Refer to Section 5 "Dipswitch Setting" for further information about each switch.

(4) Back-up heating will not be performed when the heater turns on while demand control is performed (not a request item).

(5) This is applicable only to the R410 series. Make the settings for the following dip switches on the outdoor unit control board before switching on the power.

Note

This is applicable only to the R410A series. Make the settings for the following dip switches on the indoor unit control board before switching on the power.

2. PAC-YU25HT (Optional Parts) installation

The following section describes installation of the External Heater Adapter that connects to CITY MULTI air conditioner R410A series indoor unit. This products is the special wiring parts to drive an electric heater with the air conditioner.

(1) Parts list

•Check that the following parts are included in the package.

1) External output cable (with a yellow connector).....2 in total
Two types of cables with different connectors are included.

2) Panel heater connector..... 3 in total
White: 1
Green: 2 (2 types)

(2) Connection to the indoor unit

•Use the cables that fit the connectors on the indoor unit control board. The items listed in this parts list cannot be used with the following models.
PMFY-BM
PMFY-AM

1) External output cable (with a yellow connector)
This cable is used to connect a relay circuit for an interlocked operation with either an electric or a panel heater. Connect the cable to CN24 on the indoor unit control board.

2) Panel heater connector (with a green connector)
This connector is used to perform an interlocked operation with a panel heater. Depending on the indoor unit control board specification, connect the cable either to CN4Y or CN22 as appropriate.

(3) Locally procured wiring

•A basic connection method is shown below.

1) PEFY-P-NMSU-E and other models

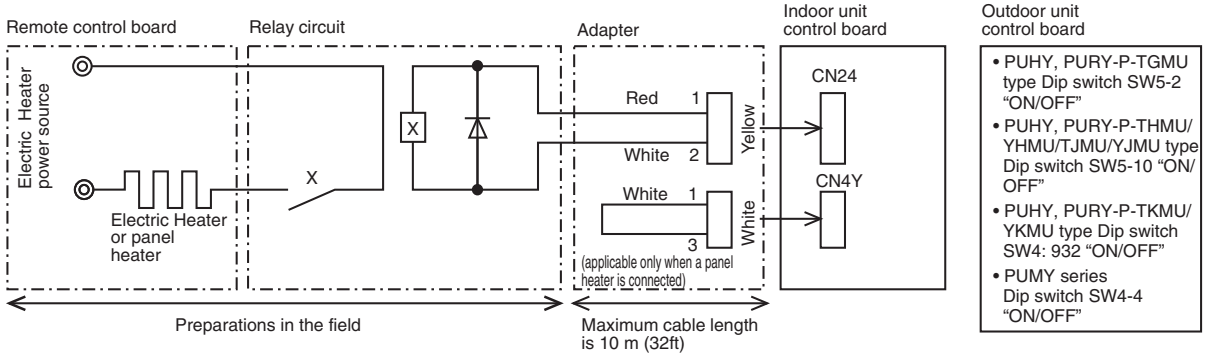

2) PEFY-P-NMAU-E3, PEFY-P-NMHU-E, PDFY-P-NMU-E and other models

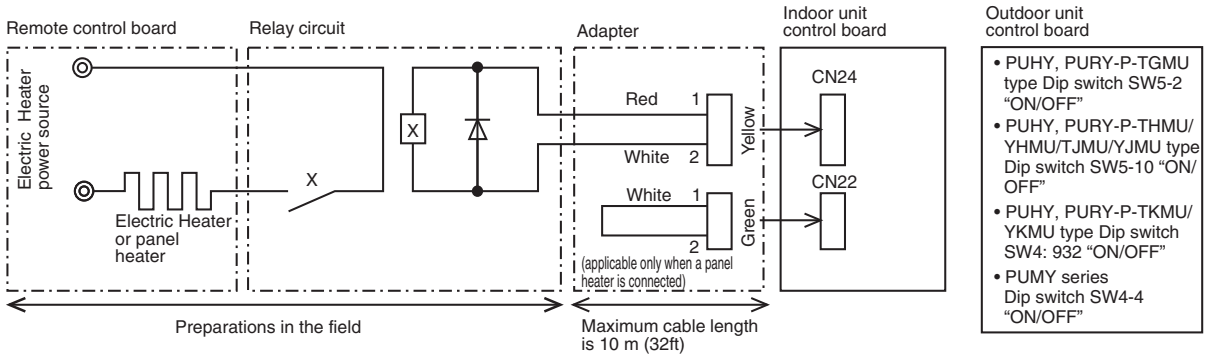

- For relay X, use the specifications given below.
  Operation coil
  Rated voltage: 12VDC
  Power consumption: 0.9W or less
  * Use the diode that is recommended by the relay manufacturer at both ends of the relay coil.
- The length of the electrical wiring for the PAC-YU25HT is 2 meters (6-1/2 ft.)
- To extend this length, use sheathed 2-core cable.
  Control cable type: CVV, CVS, CPEV or equivalent.
  Cable size: 0.5 mm^2 ~ 1.25 mm^2 (16 to 22 AWG)
  Don't extend the cable more than 10 meters (32ft)

Recommended circuit

Wiring diagram

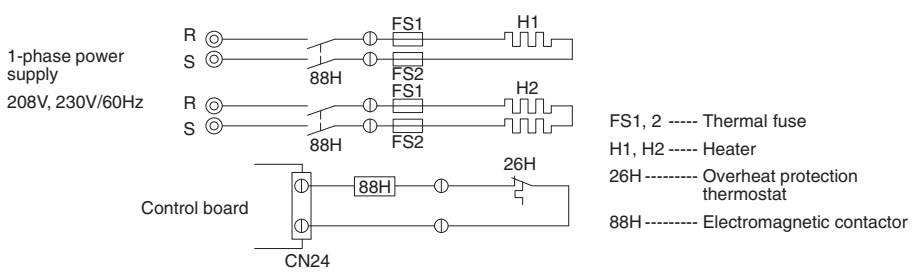

(4) Wiring restrictions

- Keep the length of the cable connecting to the circuit board of the indoor unit shorter than 10 meters (32ft).
- Longer than 10 meters (32ft) could cause improper operation.
- Use a transit relay when extending wiring such as remote wiring.

[1] Troubleshooting

1. Check methods

1. Component and check points

(1) Thermistor

- Room temperature thermistor (TH21)
- Liquid pipe thermistor (TH22)
- Gas pipe thermistor (TH23)

Disconnect the connector and measure the resistance between terminals with a tester.
(Ambient temperature 10°C - 30°C[50°F-86°F])

Normal	Abnormal
4.3kΩ - 9.6kΩ	Open or short

(Refer to the thermistor characteristic graph below.)

1) Thermistor characteristic graph

Low-temperature thermistor

- Room temperature thermistor (TH21)
- Liquid pipe thermistor (TH22)
- Gas pipe thermistor (TH23)
- Drain sensor (DS)

- Thermistor R_0 = 15 kΩ±3%
- Multiplier of B = 3480 kΩ±2%

$$Rt = 15 \exp \{ 3480(\frac{1}{273+t} - \frac{1}{273}) \}$$

0°C	32°F	15kΩ
10°C	50°F	9.6kΩ
20°C	68°F	6.3kΩ
25°C	77°F	5.2kΩ
30°C	86°F	4.3kΩ
40°C	104°F	3.0kΩ

(A) Temperature (°C)[°F]

(B) Resistance (kΩ)

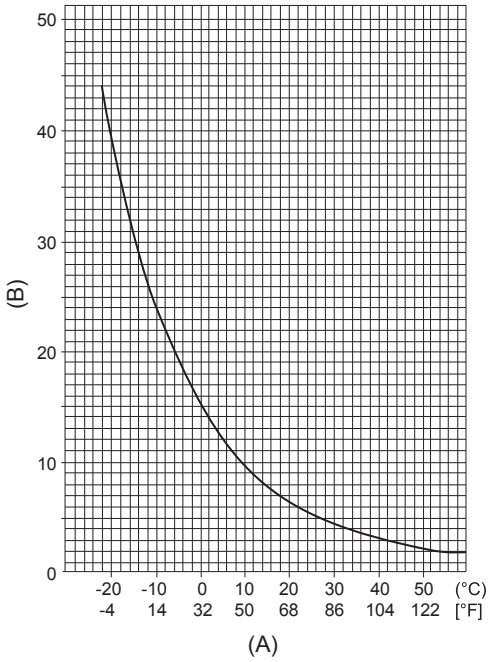

(2) Fan motor (CNMF)

Refer to the page on "DC fan motor (fan motor/indoor control board)."

(3) Linear expansion valve

Disconnect the connector, and measure the resistance between terminals with a tester.
Refer to the following.

	Normal				Abnormal
	1-5 White-Red	2-6 Yellow-Brown	3-5 Orange-Red	4-6 Blue-Brown	Open or short
	200 kΩ±10%				

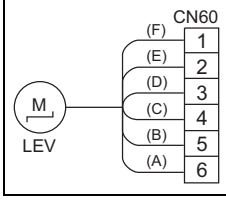

(A) Brown (D) Orange

(B) Red (E) Yellow

(C) Blue (F) White

1) Summary of linear expansion valve (LEV) operation

- The LEV is operated by a stepping motor, which operates by receiving a pulse signal from the indoor control board.
- The LEV position changes in response to the pulse signal.

Indoor control board and LEV connection

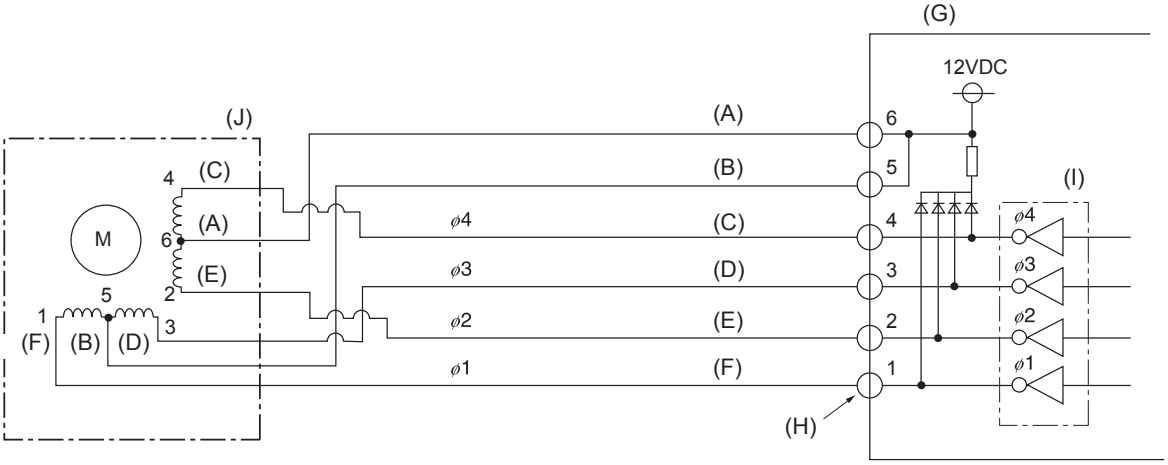

(A)	Brown	(F)	White
(B)	Red	(G)	Control board
(C)	Blue	(H)	Connection (CN60)
(D)	Orange	(I)	Drive circuit
(E)	Yellow	(J)	Linear expansion valve

Pulse signal output and valve operation

Phase number	Output pulse			
	1	2	3	4
ø1	ON	OFF	OFF	ON
ø2	ON	ON	OFF	OFF
ø3	OFF	ON	ON	OFF
ø4	OFF	OFF	ON	ON

The output pulse changes in the following order:
When the valve closes 1 -> 2 -> 3 -> 4 -> 1
When the valve opens 4 -> 3 -> 2 -> 1 -> 4

- When the valve position remains the same, all output signals will be OFF.
- If any output signal is missing or if the signal remains ON, the motor vibrates and makes clicking noise.

2) LEV operation

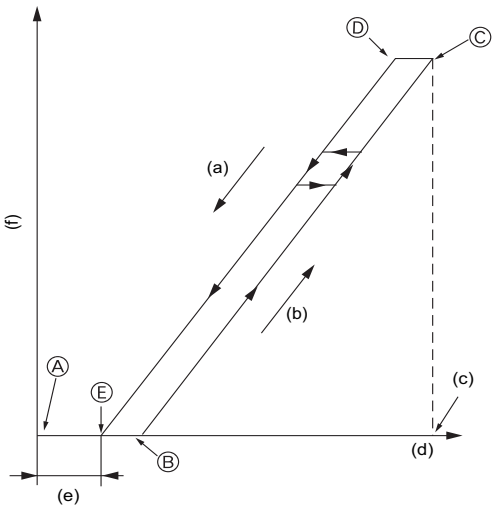

(a) Close

(b) Open

(c) Fully open valve (2000 pulses)

(d) No. of pulses

(e) Extra tightning (80 - 100 pulse)

(f) Valve opening degree

- When the power is turned on, a pulse signal of 2200 pulses is output (valve closure signal), to bring the valve to position A.
- When the valve is operating normally, it is free of vibration noise. If the valve locks or when it goes from point E to A in the figure, it makes louder noise than would be heard when there is an open phase.
- Check for abnormal sound/vibration by placing the metal tip of a screwdriver against the valve and the handle side against your ear.

3) Troubleshooting

Symptom	Checking Criteria	Remedy
Circuit failure on the microcomputer	Disconnect the connectors on the control board, and connect LEDs to test the circuit as shown below. 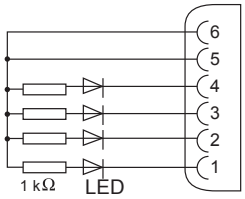 Pulse signals are output for 10 seconds when the main power is turned on. If there are LEDs that do not light up at all or remain lit after the pulses are turned off, there is a problem with the driving circuit.	Replace the indoor control board if driving circuit failure is detected.
Locked LEV	The motor will idle and make small clicking noise if it is run while the LEV is locked. If this clicking noise is heard both when the valve is fully closed and while it is being opened, it indicates a problem.	Replace the LEV.
Disconnected or shorted LEV motor coils	easure the resistance between the coils with a tester (red-white, red-orange, brown-yellow, brown-blue). The normal range of resistance is 200 Ω±10%	Replace the LEV.

Symptom	Checking Criteria	Remedy
Valve closure failure (leaky valve)	To check the LEV on the indoor unit, check the indoor unit liquid pipe temperature that appears on the operation monitor on the outdoor unit's multi control board while operating the indoor unit in question in the FAN mode and the other indoor units in the cooling mode. (A) Termistor (TH22) 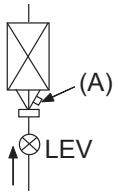 	Replace the LEV if the amount of leakage is great.
	Normally, the LEV is fully closed while the unit is in the FAN mode. If the valve is leaky, liquid pipe thermistor reading will be lower than normal. If it is significantly lower than the inlet temperature on the remote controller, valve closure failure is suspected. If the amount of leakage is insignificant, replacement of LEV is unnecessary unless it is causing a problem.	
Misconnections of connectors or contact failure	Perform a visual check for disconnected connectors. Perform a visual check of lead wire color.	Disconnect the connectors on the control board and perform a continuity test.

(4) Drain-up mechanism

Measure the resistance between the terminals with a tester.
(coil temperature 20°C[68°F])

	Normal	Abnormal
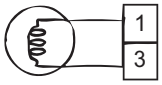 	340 Ω	Open or short

(5) Drain float switch (CN4F)

Disconnect the connector, and measure the resistance between terminals with a tester.

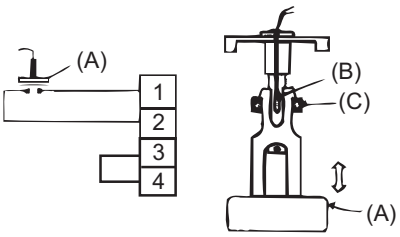

(A) Moving part
(B) Switch
(C) Magnet

Position of the moving part	Normal	Abnormal
Up	Short	(any position but short)
Down	Open	(any position but open)

2. DC fan motor (fan motor/indoor control board)

1. CAUTION
   - A high voltage is applied to the connector for connection to the fan motor (CNMF).
   - Do not unplug the connector CNMF with the unit energized to avoid damage to the indoor control board and fan motor.

2. Troubleshooting
   - Symptom: Indoor unit fan does not run.

Check fan motor connector contact (CNMF).

↓

Is the fan motor connector (CNMF) fully inserted?

No → Fix the connection.

Yes ↓

Power supply voltage V_{DC}

Check the power supply.

Measure the voltage at the indoor control board.

V_{DC} 294 - 340VDC (same with the voltage between fan connector 1 (+) and 4(-))

Power supply voltage	V_{DC}
208VAC	294VDC
220VAC	311VDC
230VAC	325VDC
240VAC	340VDC

V_{CC} 15VDC (same with the voltage between fan connector 5 (+) and 4(-))

V_{SP} 1 - 6.5VDC (same with the voltage between fan connector 6 (+) and 4(-))

[Values for Vsp are the values that are measured with the fan motor in operation. Vsp is 0V when the fan motor is stopped.]

↓

Is the voltage within the normal range?

No → Replace the indoor control board.

Yes ↓

Check the fan motor position thermistor signal.
Get the motor to make a full rotation or more, and measure the voltage at the test point V_{FG}.
(same with the voltage between fan connector 7 (+) and 4(-))

↓

Are 0VDC and 15VDC displayed alternately?

No → Replace the motor.

Yes ↓

Replace the indoor control board.

3. Address switch setting

Make sure that power to the unit is turned off.

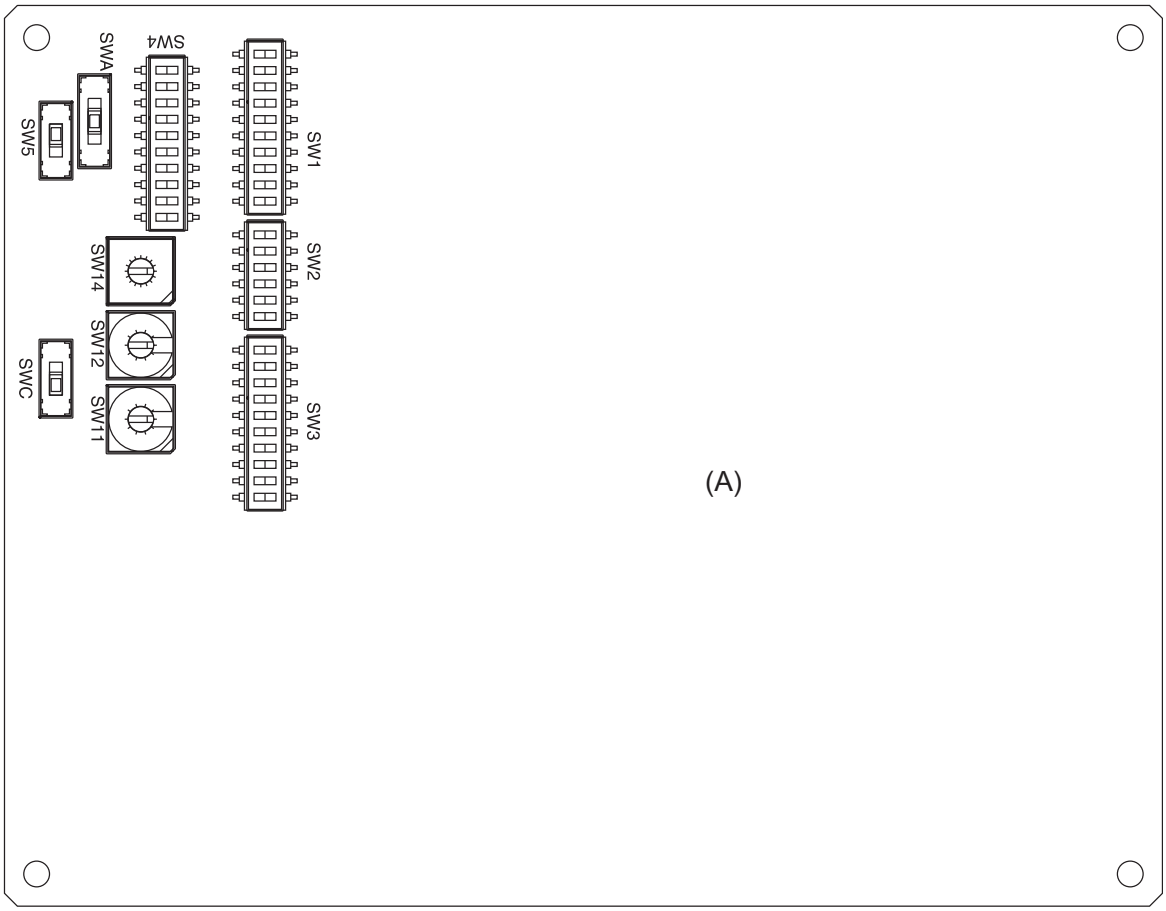

(A) Indoor unit control board

(B) Factory setting (all models)

1. When using an ME remote controller, set the address with the rotary switches (SW11, SW12).
   ♦Address setting is not required when the unit remote controller is used.
   On-site address setting is required for the indoor units to run.

2. Address settings vary in different systems.
   Refer to the section on address setting in the outdoor unit installation manual.

3. Address is set with a combination of SW12 (10's digit) and SW11 (1's digit).
   To set the address to "3," set SW12 to "0" and SW11 to "3."
   To set the address to "25," set SW 12 to "2" and SW 11 to "5."

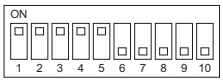

The figure at left shows that the switches 1 through 5 are set to ON and 6 through 10 are set to OFF.

4. Voltage test points on the control board

1. PEFY-P06, 08, 12, 15, 18, 24, 27, 30, 36, 48, 54NMAU-E3

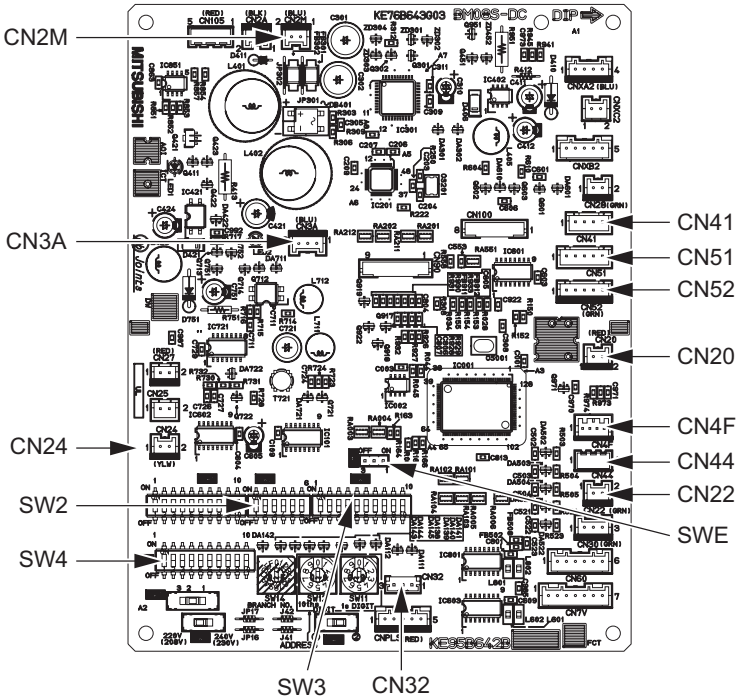

Indoor controller board

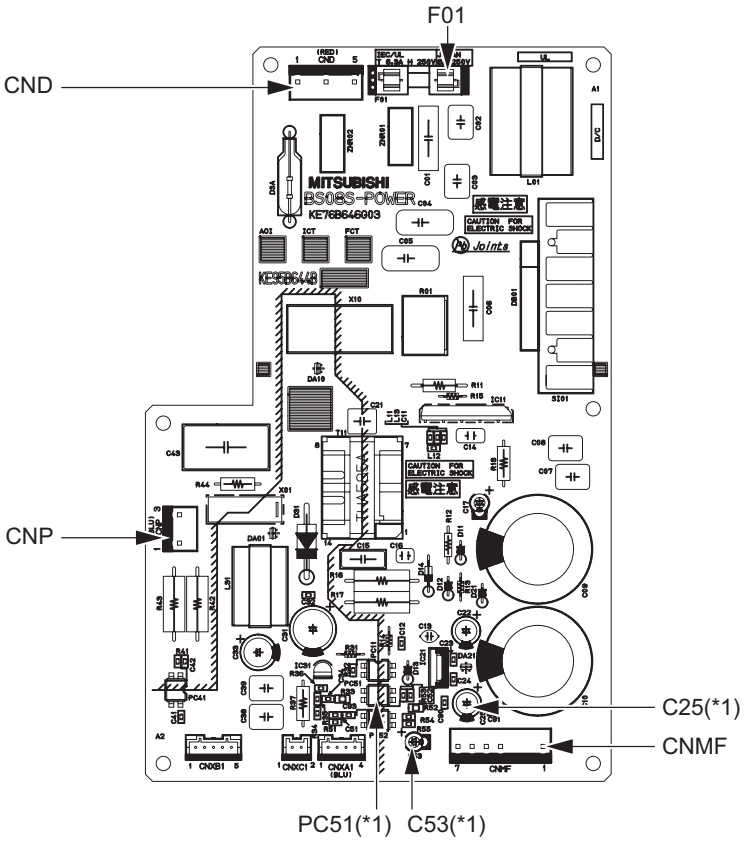

Power supply board

F01	Fuse(AC 250V 6.3A)
CND	Power supply voltage (220 - 240VAC)
CN2M	For M-NET transmission cable connection (24 - 30VDC)
SWE	Emergency operation
SW2	Capacity setting
SW4	Function setting
SW3	Function setting
CN32	Remote start/stop adapter
CN3A	For MA remote controller cable connection (10 - 13 VDC (Between 1 and 3.))
CN52	Remote display
CN51	Centralized control
CN41	JAMA standard HA terminal A
CN44	Thermistor (liquid/gas temperature)
CN4F	Float thermistor
CN22	For fan control
CN24	For heater control
CN20	Thermistor (Inlet temperature)
CNMF	Fan motor output 1 - 4: 294 - 340 VDC 5 - 4: 15 VDC 6 - 4: 0 - 6.5 VDC 7 - 4: Stop 0 or 15 VDC Run 7.5 VDC (0 - 15 pulse)
CNP	Drain-up mechanism output (200VAC)

(*1)

V_{FG}	Voltage on the (-) side of PC51 and C25 (Same with the voltage between 7 (+) and 4 (-) of CNMF)
V_{CC}	Voltage between the C25 pins 15 VDC (Same with the voltage between 5 (+) and 4 (-) of CNMF)
Vsp	Voltage between the C53 pins 0VDC (with the fan stopped) 1 - 6.5VDC (with the fan in operation) (Same with the voltage between 6 (+) and 4 (-) of CNMF)

5. Dipswitch setting (Factory setting)

1. Function setting

(1) SW1

Switch position	Function	Switch setting	
		ON	OFF
1	Active Thermistor (Intake air thermistor)	Built-in thermistor on the remote controller	Indoor unit
2	Filter clogging detection	Available	Unavailable
3	Filter life	2500 hr	100 hr
4	Outdoor air intake	Enabled	Disabled
5	Remote display	Thermo-ON signal	Fan output
6	Humidifier operation	During heating mode	During heating operation
7	Fan speed	Low	Very low
8	Fan speed at heating Thermo-OFF	Preset fan speed	Follows the setting of SW1-7
9	Auto restart after power failure	Enabled	Disabled
10	Power start/stop	Enabled	Disabled

1) Adress board

Factory setting

(2) SW3

Switch position	Function	Switch setting	
		ON	OFF
1	Unit type	Cooling only	Heat pump
2	-	-	-
3	-	-	-
4	Heater backup	Enabled	Disabled
5	-	-	-
6	-	-	-
7	-	-	-
8	Heating 4-deg up	Disabled	Enabled
9	-	-	-
10	-	-	-

1) Indoor control board

Dipswitch settings must be made while the unit is stopped.

Factory setting

PEFY-P06, 15, 24, 27, 30NMAU-E3

PEFY-P08, 18, 36, 48, 54NMAU-E3

PEFY-P12NMAU-E3

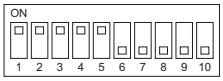

The figure at left shows that the switches 1 through 5 are set to ON and 6 through 10 are set to OFF.

2. Capacity code setting

(1) SW2

1) Indoor control board

Dipswitch settings must be made while the unit is stopped.
Factory setting
The switches are set to correspond to the unit capacity.

PEFY-P06NMAU-E3

PEFY-P08NMAU-E3

PEFY-P12NMAU-E3

PEFY-P15NMAU-E3

PEFY-P18NMAU-E3

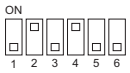

PEFY-P24NMAU-E3

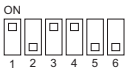

PEFY-P27NMAU-E3

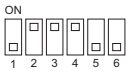

PEFY-P30NMAU-E3

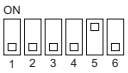

PEFY-P36NMAU-E3

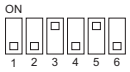

PEFY-P48NMAU-E3

PEFY-P54NMAU-E3

3. Model setting

(1) SW4

1) Indoor control board

Dipswitch settings must be made while the unit is stopped.

Factory setting

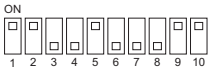

Note:
Changes made to the dipswitches SW1, SW2, and SW3 will become effective when the unit comes to a stop (remote controller off). There is no need to power cycle the unit.

4. Power voltage setting

(1) SW5

1) Indoor control board

Dipswitch settings must be operated with the main power turned OFF.

Factory setting

Set SW5 to 240V side when the power supply is 230 volts.
When the power supply is 208 volts, set SW5 to 220V side.

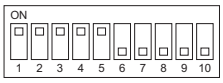

The figure at left shows that the switches 1 through 5 are set to ON and 6 through 10 are set to OFF.

The figure at left shows that the switch is set to 1.

5. External static pressure

(1) SWA, SWC

1) Indoor control board

All models

35Pa(0.14in.WG)		50Pa(0.20in.WG)		70Pa(0.28in.WG)		100Pa(0.40in.WG)		150Pa(0.60in.WG)	
SWA	SWC	SWA	SWC	SWA	SWC	SWA	SWC	SWA	SWC

Factory setting

Note:
Changes that are made to the dipswitches SWA and SWC immediately become effective regardless of the unit's operation status (RUN/STOP) or the remote controller status (ON/OFF).

6. 1s and 10ths digits

(1) SW11, SW12 (Rotary switch)

The use of a network remote controller (PAR-F27MEA) requires address setting.

1) Indoor control board

Address settings must be made while the unit is stopped.

Factory setting

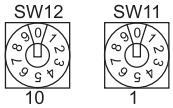

7. Connection No. setting

(1) SW14 (Rotary switch)

This switch is used when the unit connected to an R2 series of outdoor unit.

1) Indoor control board

Factory setting

Note:
Changes to the dipswitches SW11, SW12, SW14, and SW15 must be made while the unit is stopped and the remote controller is OFF.

The figure at left shows that the switch is set to 1.

[1] Disassembly Procedure

1. Control box

Exercise caution when removing heavy parts.

1. Removing the control box cover

(1) Remove the three fixing screws on the cover (A) to remove it.

- Tighten screws to a torque of 2.0±0.2 N.m.

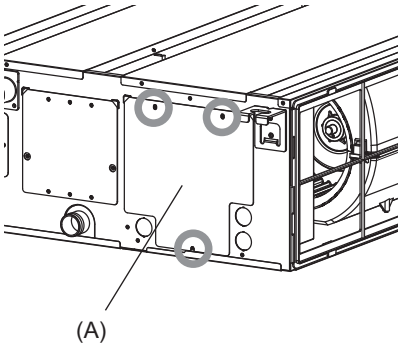

Fig.1

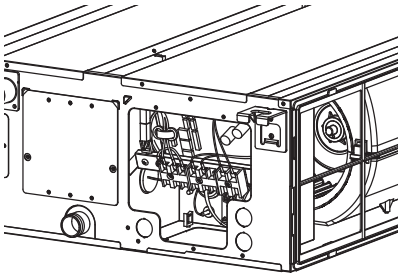

Fig.2

2. Thermistor (Intake air)

Exercise caution when removing heavy parts.

1. Remove the control box cover according to the procedure in **section 1**.
2. Remove the thermistor.

(1) Pull out the thermistor holder (B) and thermistor (C) on the control box.

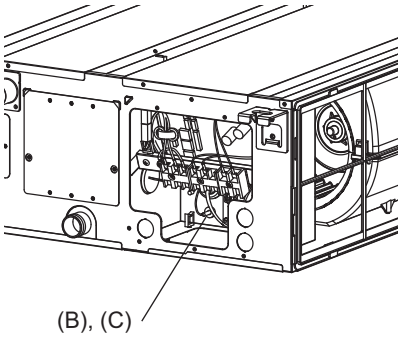

Fig.3

3. Drainpan

Exercise caution when removing heavy parts.

1. Removing the filter and the bottom plate

(1) Push down the tab on the filter, and pull out the filter in the direction of the arrow 1.

(2) Remove the fixing screws on the bottom plate (D), (E) to remove it.

- Tighten screws to a torque of 1.4±0.2 N.m.

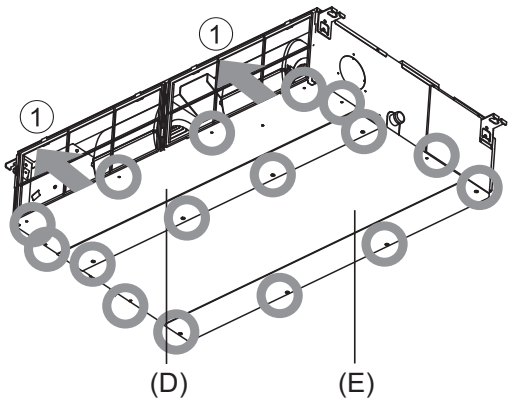

Fig.4

2. Removing the drainpan

(1) Pull out the drain pan in the direction of the arrow 2.

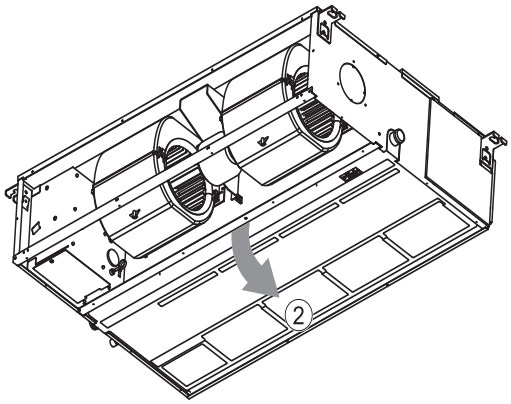

Fig.5

Note

- **Drain the water out of the drain pan before removing it.**

4. Thermistor (Gas pipe) (Liquid pipe)

Exercise caution when removing heavy parts.

1. Remove the drain pan according to the procedure in **section 3**.
2. Removing the Heat exchanger cover

(1) Remove the four fixing screws on the heat exchanger cover (F) to remove it.

♦Tighten screws to a torque of 1.4±0.2 N.m.

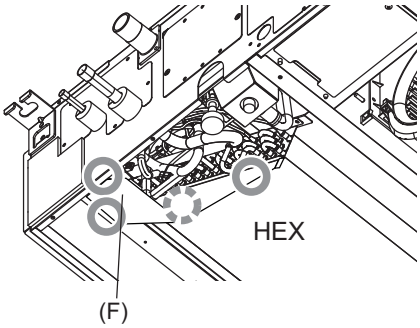

Fig.6

3. Removing the thermistor

(1) Remove the thermistor (G) from the thermistor holder (H) on the copper tube.

Thermistor size
Liquid pipe: ø8mm
Gas pipe: ø6mm

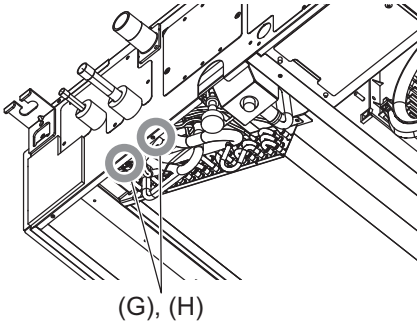

Fig.7

5. Fan and fan motor

Exercise caution when removing heavy parts.

1. Removing the filter and the bottom plate

(1) Push down the tab on the filter, and pull out the filter in the direction of the arrow 1.

(2) Remove the fixing screws on the bottom plate (J) to remove it.

♦Tighten screws to a torque of 1.4±0.2 N.m.

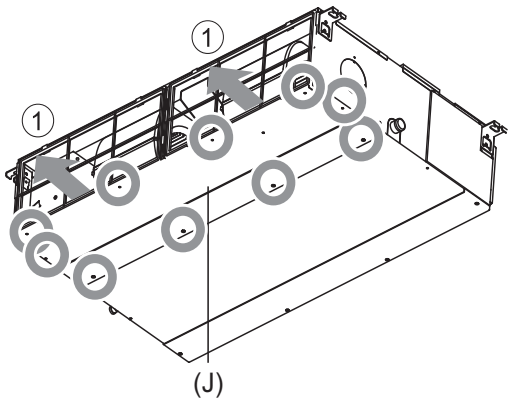

Fig.8

(a) Tab

2. Removing the fan casing (bottom half)

(1) Squeeze the tabs on the fan casing to remove it in the direction of arrow 2.

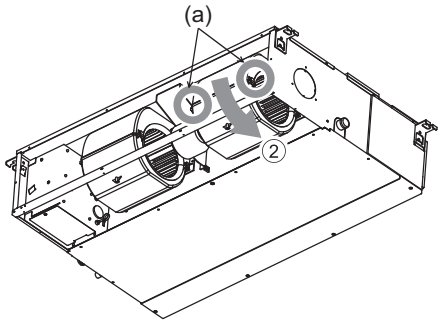

Fig.9

3. Removing the motor cable

(1) Remove the motor cable threw the rubber bush.

4. Removing the fan motor and the Sirocco fan

(1) Remove the two motor fixing screws to remove the motor and the Sirocco fan in the direction of arrow 3.

♦Tighten screws to a torque of 3.5±0.2 N.m.

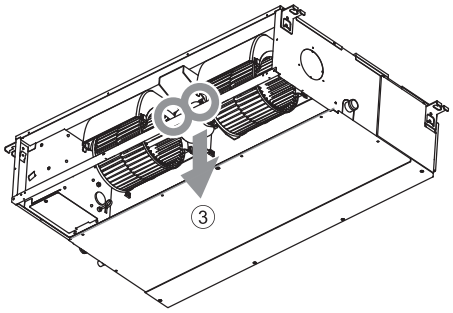

Fig.10

(2) Remove the four fan case fixing screws to take the top half of the fan casing off.

♦Tighten screws to a torque of 1.4±0.2 N.m.

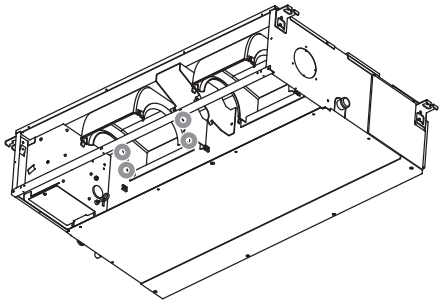

Fig.11

6. Heat exchanger

Exercise caution when removing heavy parts.

1. Remove the drain pan according to the procedure in **section 3**.

2. Remove the heat exchanger cover according to the procedure in **section 4.** 2.

3. Removing the cover

(1) Remove the five fixing screws on the cover (K) to remove it.

- Tighten screws to a torque of 2.0±0.2 N.m.

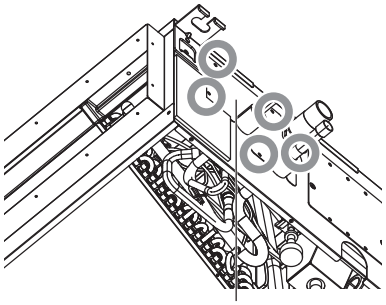

Fig.12

(K) Pipe support plate

4. Removing the Heat exchanger

(1) Remove the fixing screws on the heat exchanger (M) to remove it.

- Tighten screws to a torque of 1.4±0.2 N.m.

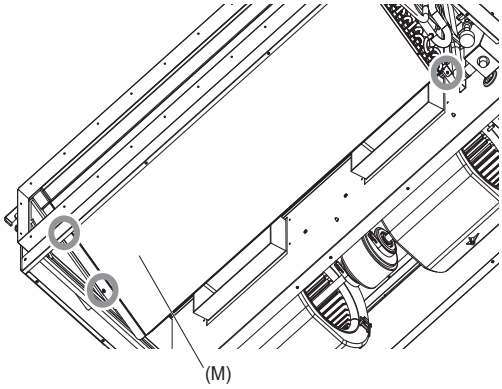

Fig.13

MITSUBISHI ELECTRIC CORPORATION

www.MitsubishiElectric.com

HWE1301B

New publication effective Nov. 2017
Specifications subject to change without notice