# P-SERIES

# PCA-A42KA6 & PUZ-A42NHA6 (-BS)

## 42,000 BTU/H CEILING-SUSPENDED HEAT-PUMP SYSTEM

MITSUBISHI ELECTRIC

| Job Name: | |
|---|---|
| System Reference: | Date: |

Indoor Unit: PCA-A42KA6

Outdoor Unit: PUZ-A42NHA6 (-BS)

## UNIT OPTION:

- ☐ Standard Model.....PUZ-A42NHA6
- ☐ Seacoast (BS) Model.....PUZ-A42NHA6-BS

## ACCESSORIES:

### Indoor Unit

- ☐ Condensate Pump (BlueDiamond X87-711/721; 115/230V)
- ☐ Condensate Pump (Sauermann SI30-115/230; 115/230V)
- ☐ High-Efficiency Filter (PAC-SH90KF-E)
- ☐ iSee Sensor (PAC-SH91MK-E)
- ☐ Disconnect Switch (TAZ-MS303)

### Outdoor Unit

- ☐ Wind Baffle (WB-PA2 [x2])

*Allows operation to 0° F (-18° C).

- ☐ Air Outlet Guide (PAC-SG59SG-E [x2])
- ☐ Mounting Base (QSMS1202)
- ☐ Wall Bracket (QSWB2000M-1)

### Controls

- ☐ Wireless Controller (MHK1)
- ☐ Advanced Wired Controller (PAR-31MAA)
- ☐ Simple Wired Controller (PAC-YT53CRAU)
- ☐ M-NET Adapter (PAC-SF83MA-E)
- ☐ Temperature Sensor (PAC-SE41TS)

## SPECIFICATIONS:

| Rated Conditions (Capacity / Input)* | | |
|---|---|---|
| Cooling | Btu/h / W | 42,000 / 4,110 |
| Heating at 47° F | Btu/h / W | 45,000 / 3,830 |
| Heating at 17° F | Btu/h / W | 30,000 / 3,820 |

* Rating Conditions per AHRI Standard:
Cooling | Indoor: 80° F (27° C)DB / 67° F (19° C)WB; Outdoor: 95° F (35° C)DB / 75° F (24° C)WB
Heating at 47°F | Indoor: 70° F (21° C)DB / 60° F (16° C)WB; Outdoor: 47° F (8° C)DB / 43° F (6° C)WB
Heating at 17° F | Indoor: 70° F (21° C)DB / 60° F (16° C)WB; Outdoor: 17° F (-8° C)DB / 15° F (-9° C)WB

| Capacity Range | | |
|---|---|---|
| Cooling | Btu/h | 18,000 - 42,000 |
| Heating at 47° F | Btu/h | 18,000 - 48,000 |

| Operating Range | |
|---|---|
| Cooling | 0° F** to 115° F (-18° C to 46° C) DB |
| Heating | 12° F to 70° F (-11° C to 21° C) DB |

** The minimum temperature will be 23° F (-5° C) DB if optional wind baffle accessory is not installed.

| AHRI Efficiency Ratings | |
|---|---|
| EER | 10.2 |
| SEER | 15.8 |
| HSPF | 10.2 |
| COP at 47° F | 3.44 |
| COP at 17° F | 2.3 |

| Electrical Power Requirements | 208 / 230V, 1-Phase, 60 Hz |
|---|---|

| Minimum Circuit Ampacity (MCA) | | |
|---|---|---|
| Indoor / Outdoor | A | 2 / 26 |

| Indoor Unit | | |
|---|---|---|
| Blower Motor (ECM) | F.L.A. | 0.97 |
| Blower Motor Output | W | 160 |
| SHF / Moisture Removal | | 0.69 / 11.7 pt./h |

| Outdoor Unit | | |
|---|---|---|
| Compressor | | DC INVERTER-driven Twin Rotary |
| Fan Motor (ECM) | F.L.A. | 0.4+0.4 |
| MOCP | A | 40 |

| Airflow Rate (Low-M1-M2-Hi) | | | |
|---|---|---|---|
| Indoor (Cooling) | DRY | CFM | 810-885-955-1,055 |
| | WET | | 740-810-885-955 |
| Outdoor | DRY | | 3,530 |

| Sound Pressure Level | | | |
|---|---|---|---|
| Indoor (Low-M1-M2-Hi) | | dB(A) | 39-41-43-45 |
| Outdoor | Cooling | | 51 |
| | Heating | | 55 |

| External Dimensions | | |
|---|---|---|
| Indoor (H x W x D) | In.(mm) | 9-1/16 x 63 x 26-3/4 (230 x 1,600 x 680) |
| Outdoor (H x W x D) | | 53-1/8 x 37-3/8 x 13 + 1-3/16 (1,350 x 950 x 330 + 30) |

| Net Weight | | |
|---|---|---|
| Indoor | Lbs.(kg) | 84 (38) |
| Outdoor | | 251 (114) |

| External Finish | |
|---|---|
| Indoor | Munsel No. 6.4Y 8.9/0.4 |
| Outdoor | Munsell No. 3Y 7.8 / 1.1 |

| Refrigerant | R410A ; 10lbs. |
|---|---|

| Refrigerant Piping (Flared) | | |
|---|---|---|
| Liquid (High Pressure) | In.(mm) | 3/8 (9.52) |
| Gas (Low Pressure) | | 5/8 (15.88) |
| Maximim Total Refrigerant Pipe Length | Ft. (m) | 165 (50) |
| Maximum Vertical Separation | Ft. (m) | 100 (30) |

Specifications are subject to change without notice.

© 2015 Mitsubishi Electric US, Inc.

# DIMENSIONS: PCA-A42KA6 & PUZ-A42NHA6 (-BS)

## PCA-A42KA6

Unit: inch (mm)

NOTES.
1.Use M10 or W3/8 screw for anchor bolt.
2.Please be sure when installing the drain lift up mechanism (option parts),refrigerant pipe will be only upward.

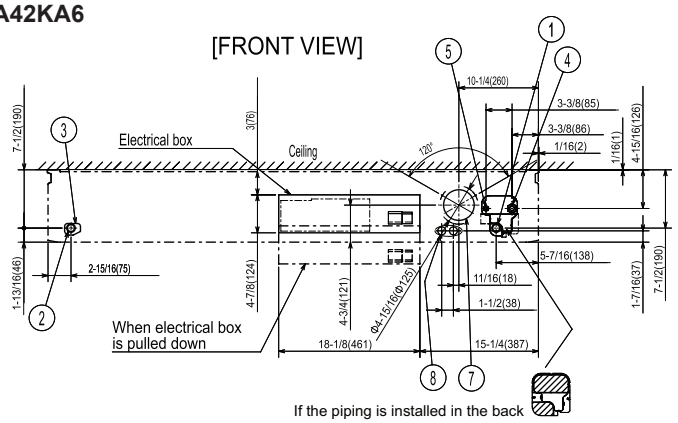


If the piping is installed in the back of the unit, remove the shaded portions from the component at right. Then, reinstall the component in its original position (the heat exchanger might be clogged beause of dust.

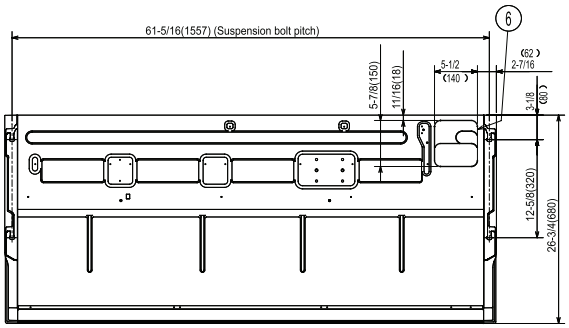


1. Drainage pipe connection(1(26mm)I.D.)
2. Drainage pipe connection(for the left arrangement)
3. Knockout hole for left drain-piping arrangement
4. Refrigerant-pipe connection (gas pipe side/flared connection)
5. Refrigerant-pipe connection (liquid pipe side/flared connection)
6. Knockout hole for upper drain pipe arrangement
7. Knockout hole for ventilation air intake Φ3-15/16(Φ100)
8. Knockout hole for wiring arrangement Φ7/8(Φ22)
   Accessory...Drain socket (1(26mm)I.D.)

## PUZ-A42NHA6 (-BS)

Unit: mm (inch)

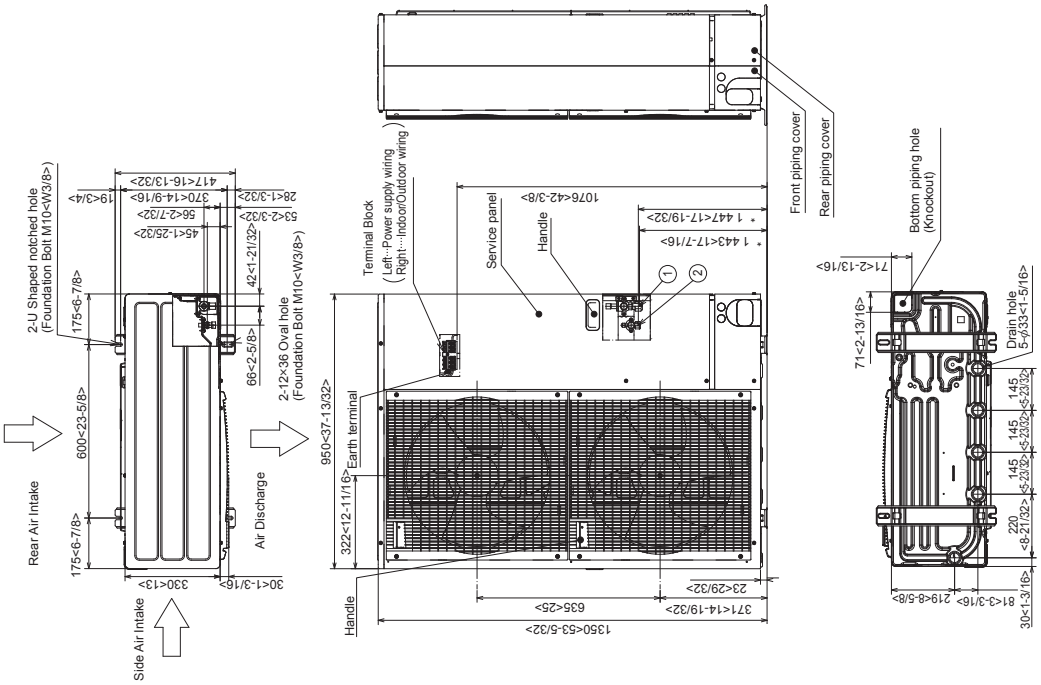


NOTES:
SEACOAST PROTECTION
- External Outer Panel: Phosphate coating + Acrylic-Enamel coating
- Fan Motor Support: Epoxy resin coating (at edge face)
- Separator Assembly ; Valve Bed: Epoxy resin coating (at edge face)
- Screws (used outer side): Zinc nickel coating 5μm + Polyvinylidene chloride coating

**"Blue Fin" treatment is an anti-corrosion treatment that is applied to the condenser coil to protect it against airborne contaminants..**

MITSUBISHI ELECTRIC
COOLING & HEATING

1340 Satellite Boulevard. Suwanee, GA 30024
Toll Free: 800-433-4822 www.mehvac.com

AHRI CERTIFIED™ www.ahridirectory.org Unitary Small HP AHRI Standard 210/240 Certification applies only when the complete system is listed with AHRI.

C ETL LISTED US Intertek

FORM# PCA-A42KA6 - PUZ-A42NHA6 (-BS) - 201507
Specifications are subject to change without notice.

© 2015 Mitsubishi Electric US, Inc.