M-SERIES

SUBMITTAL DATA: MSZ-GE06NA-8

6,000 BTU/H WALL-MOUNTED INDOOR UNIT FOR MXZ MULTI-ZONE HEAT-PUMP SYSTEMS

MITSUBISHI ELECTRIC

Job Name:	
System Reference:	Date:

Indoor Unit: MSZ-GE06NA-8

Wireless Remote Controller

GENERAL FEATURES

- Wall-mounted indoor unit
- Standard Hybrid Catechin Prefilter is included with indoor unit
- Quiet operation
- Auto fan speed control: Quiet, Low, Medium, High, and Super High
- Hand-held Wireless Remote Controller
- Indoor unit powered from outdoor unit using A-Control
- Auto restart following a power outage
- Anti-allergy Enzyme Filter
- Limited warranty: five years parts and seven years compressor

ACCESSORIES

Indoor Unit

- ☐ Condensate Pump (BlueDiamond X87-711/721; 115/230V)
- ☐ Condensate Pump (Sauermann SI30-115/230; 115/230V)
- ☐ Anti-Allergy Enzyme Filter (MAC-408FT-E)
- ☐ Drain Pan Level Sensor (DPLS2)

Controller Options

- ☐ Wireless Controller (MHK1)
- ☐ Wired Remote Controller PAR-31MAA (Requires MAC-333IF-E)
- ☐ Wireless Interface for kumo cloud™ (PAC-WHS01WF-E)
- ☐ Thermostat Interface (PAC-US444CN-1)

SPECIFICATIONS

Cooling Capacity* . . . . . 6,000 Btu/h
Heating Capacity* . . . . . 7,200 Btu/h

*** Rating Conditions per AHRI Standard**
Cooling | Indoor: 80º F (27º C) DB / 67º F (19º C) WB
Cooling | Outdoor: 95º F (35º C) DB / 75º F (24º C) WB
Heating at 47º F | Indoor: 70º F (21º C) DB / 60º F (16º C) WB
Heating at 47º F | Outdoor: 47º F (8º C) DB / 43º F (6º C) WB

(For data on specific indoor units [all ducted, all non-ducted, and both ducted and non-ducted] combinations, see the MXZ Technical and Service Manual.)

Applications should be restricted to comfort cooling only; equipment cooling applications are not recommended for low ambient temperature conditions.

Electrical Requirements
Power Supply . . . . . 208 / 230V, 1-Phase, 60 Hz
MCA . . . . . 1 A

Voltage
Indoor - Outdoor S1-S2 . . . . . AC 208 / 230V
Indoor - Outdoor S2-S3 . . . . . DC ±24V
Indoor - Remote Controller . . . . . MHK1 DC 3V
PAR-31MAAw DC 12V
PAC-YT53CRAU DC 12V

Blower Motor (ECM) . . . . . 0.76 F.L.A.

Airflow (Quiet - Lo - Med - Hi - Super Hi)
Cooling . . . . . 145 - 170 - 237 - 321 - 399 Dry CFM
109 - 134 - 201 - 286 - 364 Wet CFM
Heating . . . . . 145 - 170 - 233 - 321 - 406 CFM

Sound Pressure Level (Quiet - Lo - Med - Hi - Super Hi)
Cooling . . . . . 19 - 22 - 30 - 37 - 43 dB(A)
Heating . . . . . 19 - 22 - 30 - 37 - 43 dB(A)

DIMENSIONS	UNIT INCHES / MM
W	31-7/16 / 799
D	9-1/8 / 232
H	11-5/8 / 295

Weight . . . . . 22 lbs. / 10 kg
External Finish . . . . . Munsell No. 1.0Y 9.2 / 0.2
Field Drainpipe Size O.D. . . . . 5/8" / 15.88 mm

Refrigerant Type R410A
Refrigerant Pipe Size O.D.
Gas Side . . . . . 3/8" / 9.52 mm
Liquid Side . . . . . 1/4" / 6.35 mm
Connection Method . . . . . Flared

Specifications are subject to change without notice.

© 2016 Mitsubishi Electric US, Inc.

DIMENSIONS: MSZ-GE06NA-8

Unit: inch

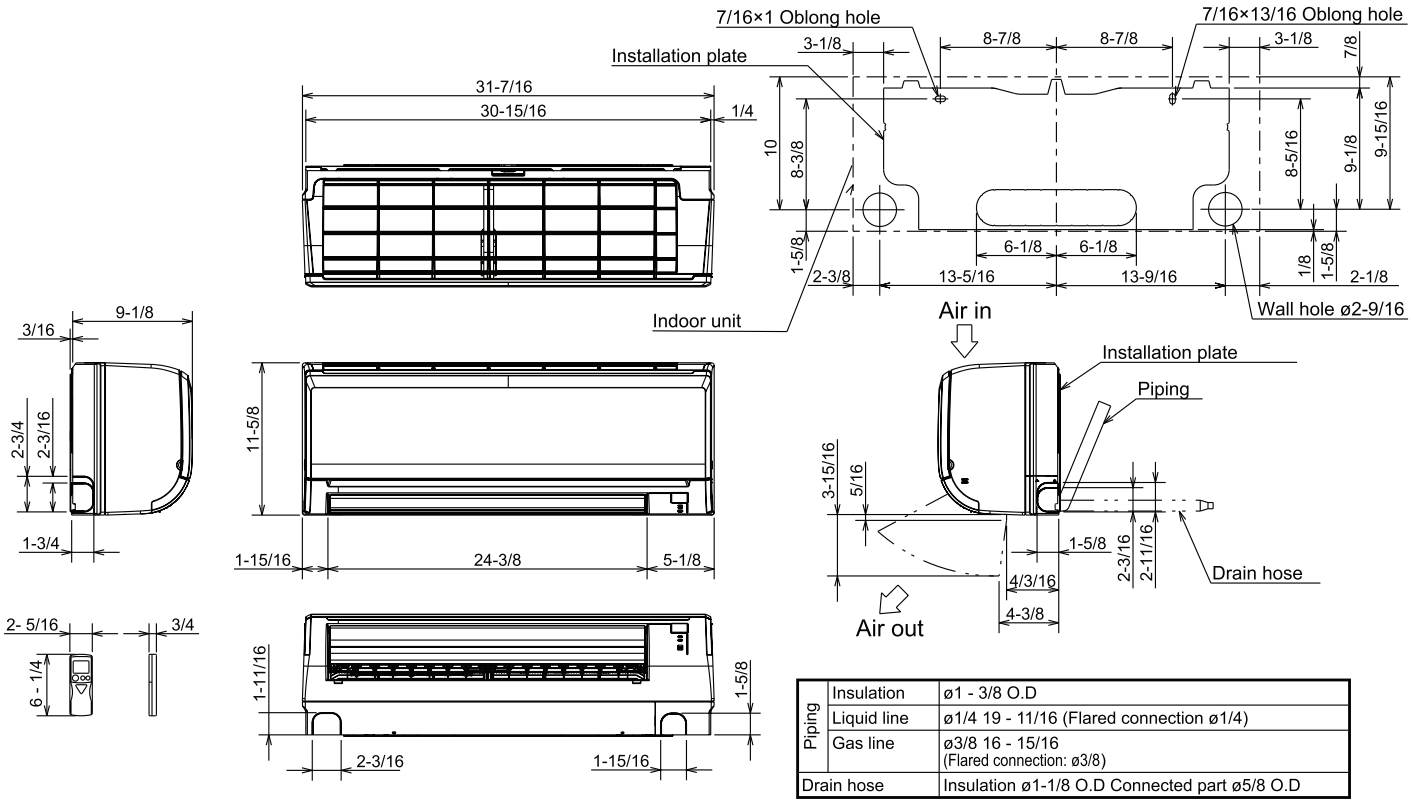

Piping	Insulation	ø1 - 3/8 O.D
	Liquid line	ø1/4 19 - 11/16 (Flared connection ø1/4)
	Gas line	ø3/8 16 - 15/16 (Flared connection: ø3/8)
Drain hose		Insulation ø1-1/8 O.D Connected part ø5/8 O.D

MITSUBISHI ELECTRIC

COOLING & HEATING

1340 Satellite Boulevard. Suwanee, GA 30024
Toll Free: 800-433-4822 www.mehvac.com

AHRI CERTIFIED™ www.ahridirectory.org Unitary Small HP AHRI Standard 210/240 Certification applies only when the complete system is listed with AHRI.

C ETL LISTED US Intertek

FORM# MSZ-GE06NA-8 FOR MXZ MULTI-ZONE SYSTEMS - 201603

Specifications are subject to change without notice.

© 2016 Mitsubishi Electric US, Inc.