H4

Four-Inch Architectural Housing

Product Description

The H4 recessed architectural housing is designed to accommodate the Cree LR4 LED downlight in a variety of architectural applications. It is rated for use with luminaires that consume low energy, like the LR4, optimizing energy density calculations for easier energy code compliance and LEED certification. The H4 housing is IC rated, airtight, inherently protected, and California Title-24 compliant.

Product Specifications

CONSTRUCTION & MATERIALS

- Recessed housing accommodates Cree LR4 four-inch LED downlights in ceiling thicknesses from 0.25″ to 1.25″.
- Gasketed housing enables air-tight fit to effectively isolate housing assembly from conditioned space below.
- Adjustable bar-hangers span from 10.25″ to 24.75″ without sag. Bar-hanger brake prevents sliding during installation and holds position once installed.
- Suitable for insulated or non-insulated ceilings.
- **Dimensions:** L 14″ x W 8″ x H 7″

REGULATORY & VOLUNTARY QUALIFICATIONS

- cULus Listed®
- IC air-tight rated, tested in accordance with ASTM E283.
- Title-24 compliant.
- Suitable for damp locations.

Ordering Information

Example: LR4E-30C + H4 + LT4-30A

Fully assembled luminaire is composed of three components that must be ordered separately:

LR4: Light engine **H4: Recessed architectural housing** **LT4: Snap-in architectural trim**

Light Engines
LR4E-15
LR4E-15C
LR4E-30
LR4E-30C

Housing
H4 Recessed housing with GU24 socket

Trims	
LT4-15A/LT4-30A Diffuse anodized finish trim	**LT4-15AB/LT4-30AB** Black anodized finish trim
LT4-15AW/LT4-30AW Wheat diffuse anodized finish trim	**LT4-15WH/LT4-30WH** Smooth white trim
LT4-15AP/LT4-30AP Pewter diffuse anodized finish trim	**LT4-15BB/LT4-30BB** Flat black finish trim and reflector

NOTE: Light engine and trim reflector depth must match for appropriate fit.

H4

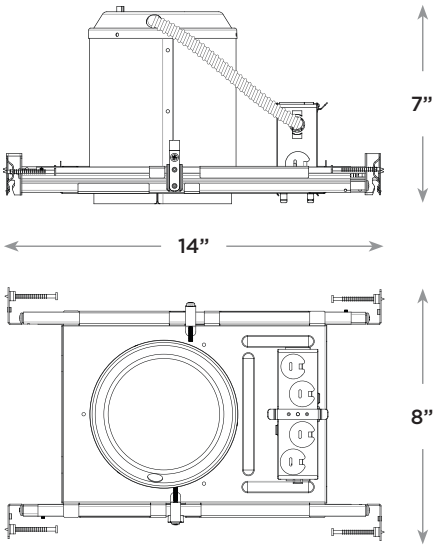

For product or purchasing inquiries contact:

ecoDIRECT

CLEAN ENERGY SOLUTIONS

www.ecodirect.com

c UL US LISTED

Copyright © 2012 Cree, Inc. All rights reserved. For informational purposes only. Not a warranty or specification. See www.CreeLEDLighting.com for warranty and specifications. Cree, TrueWhite, Cree LED Lighting, and the Cree logo are registered trademarks, and Cree TrueWhite, the Cree TrueWhite Technology logo, and LR4 are trademarks of Cree, Inc. H4PI_1/2012

CreeLEDLighting.com T (800) 236-6800 F (262) 504-5415