JNB1

HIF100 (MALE)

99	+5V	100	0V	49	EA18	50	EA19
97	+5V	98	SYSCLK	47	EA16	48	EA17
95	+5V	96	0V	45	EA14	46	EA15
93	+5V	94	0V	43	EA12	44	EA13
91	+5V	92	*HD1INT	41	EA10	42	EA11
89	+5V	90	*VSYINT	39	EA08	40	EA09
87	+5V	88	*RVRDY0	37	EA06	38	EA07
85	+5V	86	*RVRDY1	35	EA04	36	EA05
83	+5V	84	*RD	33	EA02	34	EA03
81	0V	82	*WR	31	ED15	32	EA01
79	0V	80	*BE0	29	ED13	30	ED14
77	+15V	78	*BE1	27	ED11	28	ED12
75	0V	76	*PF	25	ED09	26	ED10
73	0V	74	*EN	23	ED07	24	ED08
71	-15V	72	*SYSCLR	21	ED05	22	ED06
69	0V	70	*SYSFAIL	19	ED03	20	ED04
67	0V	68	*SYSTMR	17	ED01	18	ED02
65	+24V	66	*SYSITP	15		16	ED00
63	+24V	64	*PMCTMR	13	GD06	14	
61	+24V	62	*I/O	11	GD05	12	*EXRDY
59	0V	60	*MAT	9	GD04	10	*EXSTB1
57	0V	58	*CHTMEM	7	GD03	8	*EXSTB2
55	0V	56	*DISP	5	GD02	6	*EXDEN
53	MCLK	54	HI	3	GD01	4	DIR
51	0V	52	TEST	1	GD00	2	*IOIDRD

CN2

CRT

P. JAEPS20

	A	B
01	*PF	HI
02	*SR	TEST
03		
04	+5V	+5V
05	+5V	+5V
06	+5V	0V
07	0V	0V
08	0V	0V
09	-15V	0V
10	+15V	+24V

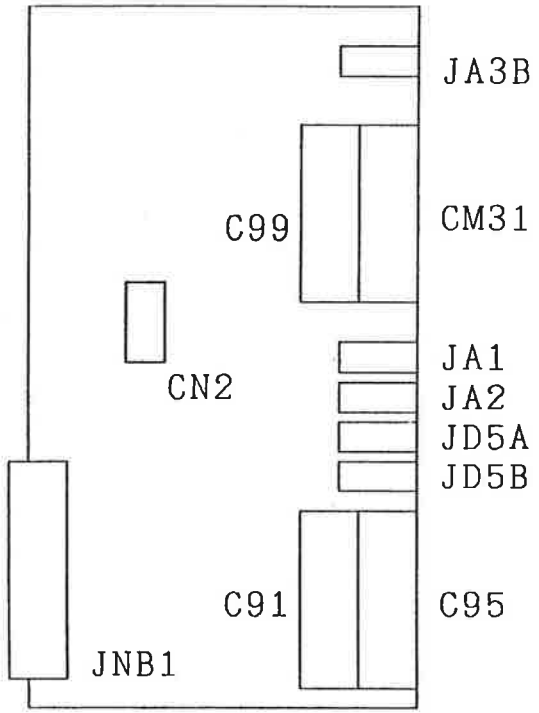

CONNECTOR TABLE 1

BA01

DWG.	DATE	DESIG.	CHECK	DESCRIPTION
DESIG.	92. 06. 22	AIZAWA	DRAWN	CHECK

TITLE: FS20 I/O BOARD CIRCUIT DIAGRAM

DRAW NO. A16C-2201-0730-0732/03

COST.

FANUC LTD

SHEET 001/32

C95

FAP-50

	A	B
01	+24V	+24V
02	+24V	*SESP
03	*EMS	EMC
04	OTR	Y08.0
05	Y08.1	Y08.2
06	Y08.3	Y08.4
07	Y08.5	Y08.6
08	Y08.7	Y09.0
09	Y09.1	Y09.2
10	Y09.3	Y09.4
11	Y09.5	Y09.6
12	Y09.7	Y10.0
13	Y10.1	Y10.2
14	Y10.3	Y10.4
15	Y10.5	Y10.6
16	Y10.7	Y11.0
17	Y11.1	Y11.2
18	Y11.3	Y11.4
19	Y11.5	Y11.6
20	Y11.7	Y12.0
21	Y12.1	Y12.2
22	Y12.3	Y12.4
23	Y12.5	X12.4
24	0V	0V
25	0V	0V

C91

FAP-50

	A	B
01	+24V	+24V
02	+24V	
03	X08.0	Y12.6
04	X08.1	Y12.7
05	X10.7	Y13.0
06	X10.6	X10.5
07	X10.3	X08.2
08	X10.1	X10.4
09	X11.0	X10.2
10	X08.3	X10.0
11	X08.6	X08.7
12	COM0	X08.5
13	X08.4	X09.4
14	Y13.1	X09.0
15	Y13.2	X09.1
16	Y13.3	X11.1
17	X11.2	X11.3
18	X09.2	X11.4
19	X11.5	X11.6
20	X11.7	X12.0
21	X12.1	X09.3
22	X09.7	X09.6
23	X09.5	COM1
24	0V	0V
25	0V	0V

CM31

FAP-50

	A	B
01	+24V	+24V
02	DICOM1	DICOM2
03	DICOM3	DICOM4
04	*DID00	*DID01
05	*DID02	*DID03
06	*DID04	*DID05
07	*DID06	*DID07
08	*DID08	*DID09
09	*DID10	*DID11
10	*DID12	*DID13
11	*DID14	*DID15
12	DOCOM1	DOCOM2
13	DOCOM3	DOCOM4
14	*DOD0	*DOD1
15	*DOD2	*DOD3
16	*DOD4	*DOD5
17	*DOD6	*DOD7
18	*DOD8	*DOD9
19	*DOD10	*DOD11
20	*DOD12	*DOD13
21	*DOD14	*DOD15
22	OFF	ON
23	COM	OTR
24	*EMS	EMC
25	0V	0V

C99

FAP-50

	A	B
01	+24V	+24V
02	+24V	
03	X13.0	*SESP
04	X13.1	EMC
05	X12.7	Y13.4
06	X12.6	X12.5
07	X12.3	X13.2
08	AIN1	
09	AIN2	X12.2
10	X13.3	
11	X13.6	X13.7
12	COM2	X13.5
13	X13.4	HDI4
14	Y13.5	HDI0
15	Y13.6	HDI1
16	Y13.7	*EMS
17		OTR
18	HDI2	OFF
19	ON	COM
20	AIN3	
21	AIN4	HDI3
22	HDI7	HDI6
23	HDI5	
24	0V	0V
25	0V	0V

JA1

PCR E20

9		10	+24V	19	+24V	20	
7		8	DCLK	17		18	HSYNC
5	VDOB	6	0V	15		16	0V
3	VDOG	4	0V	13		14	0V
1	VDOR	2	0V	11		12	VSYNC

JA2

PCR E20

9	*KCM8	10	*KCM10	19	*KCM9	20	*KCM11
7	*KCM4	8	*KCM6	17	*KCM5	18	*KCM7
5	*KCM0	6	*KCM2	15	*KCM1	16	*KCM3
3	KEYD4	4	KEYD6	13	KEYD5	14	KEYD7
1	KEYD0	2	KEYD2	11	KEYD1	12	KEYD3

JD5A

PCR E20

9		10	+24V	19	+24V	20	
7	CDA	8	0V	17		18	
5	CTSA	6	0V	15	RTSA	16	0V
3	DSRA	4	0V	13	DTRA	14	0V
1	RXDA	2	0V	11	TXDA	12	0V

JD5B

PCR E20

9		10	+24V	19	+24V	20	
7	CDB	8	0V	17		18	
5	CTSB	6	0V	15	RTSB	16	0V
3	DSRB	4	0V	13	DTRB	14	0V
1	RXDB	2	0V	11	TXDB	12	0V

JA3B

PCR E20

9	+5V	10	+5V	19	+5V	20	+5V
7	HA4	8	HB4	17	+5V	18	+5V
5	HA3	6	HB3	15	0V	16	0V
3	HA2	4	HB2	13	0V	14	0V
1	HA1	2	HB1	11	0V	12	0V

CONNECTOR TABLE 2

BA02

DSTG	DATE	DSIG	CHECK	DESCRIPTION	DSTG	CHECK	TYPE

TITLE

DRAW. NO. A16C-2201-0730-0732/03

CUST.

FANUC LTD

SHEET 002/32

123

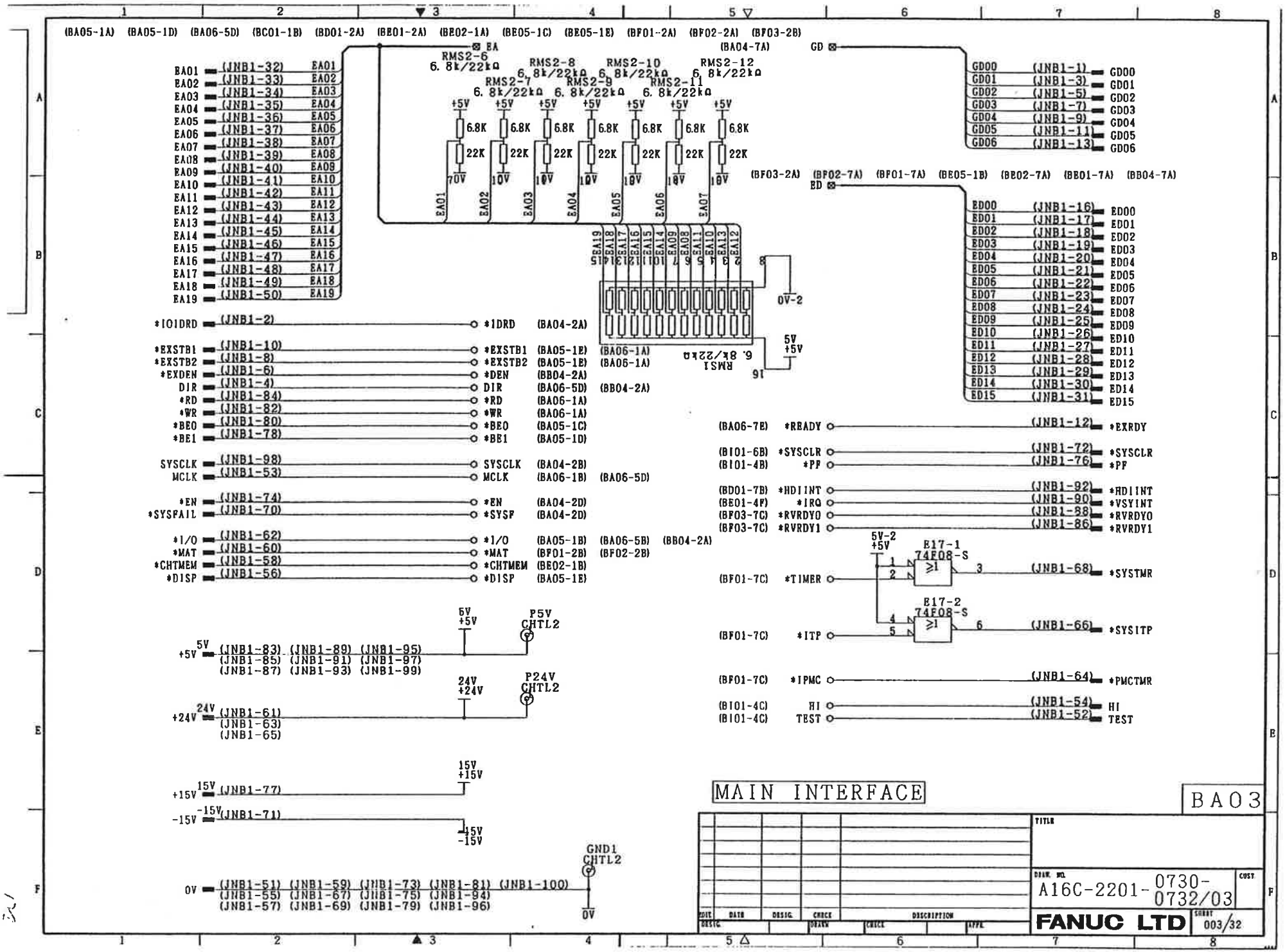
MAIN INTERFACE
BA03
FANUC LTD
A16C-2201-0730-0732/03
003/32

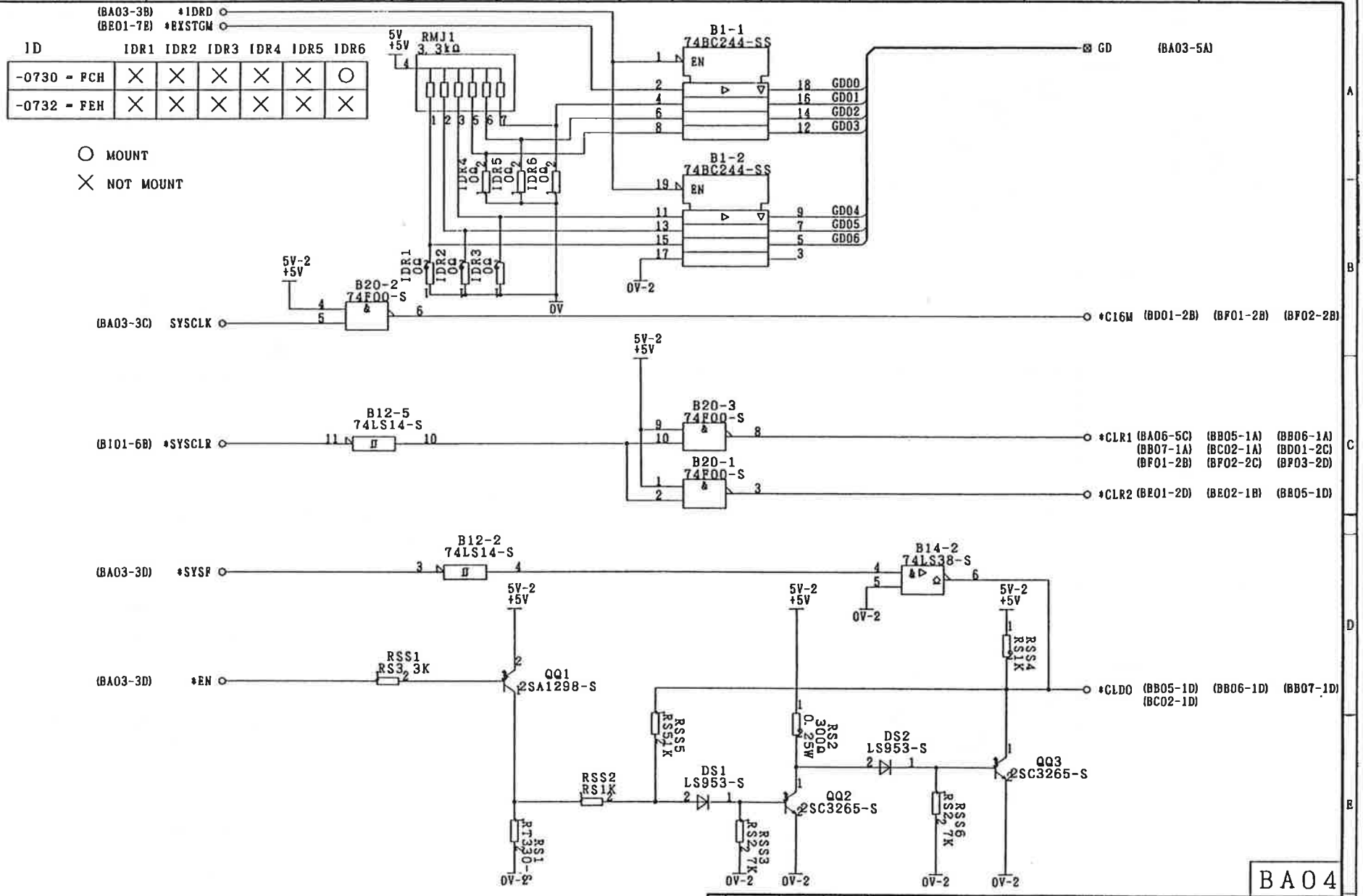
(BA03-3B) *IDRD
(BE01-7E) *EXSTGM
ID
IDR1 IDR2 IDR3 IDR4 IDR5 IDR6
-0730 = FCH
-0732 = FEH
MOUNT
NOT MOUNT
5V +5V
RMJ1 3.3kΩ
B1-1 74BC244-SS
B1-2 74BC244-SS
EN
GD (BA03-5A)
GD00 GD01 GD02 GD03
GD04 GD05 GD06
IDR1 IDR2 IDR3 IDR4 IDR5 IDR6
0Ω
5V-2 +5V
B20-2 74F00-S
0V
0V-2
(BA03-3C) SYSCLK
*C16M (BD01-2B) (BF01-2B) (BF02-2B)
B12-5 74LS14-S
(B101-6B) *SYSCLR
B20-3 74F00-S
B20-1 74F00-S
*CLR1 (BA06-5C) (BB05-1A) (BB06-1A) (BB07-1A) (BC02-1A) (BD01-2C) (BF01-2B) (BF02-2C) (BF03-2D)
*CLR2 (BE01-2D) (BE02-1B) (BB05-1D)
B12-2 74LS14-S
(BA03-3D) *SYSF
B14-2 74LS38-S
(BA03-3D) *EN
RSS1 RS3 3K
QQ1 2SA1298-S
RSS4 RS1K
*CLDO (BB05-1D) (BB06-1D) (BB07-1D) (BC02-1D)
RSS5 RS51K
RS2 300Ω 0.25W
DS2 LS953-S
QQ3 2SC3265-S
RSS2 RS1K
DS1 LS953-S
QQ2 2SC3265-S
RS1 RT320-S
RSS3 RS2 7K
RSS6 RS2 7K
BA04
TITLE
DRAW NO. A16C-2201-0730-0732/03
FANUC LTD
SHEET 004/32
EDIT DATA DESIG. CHECK DESCRIPTION

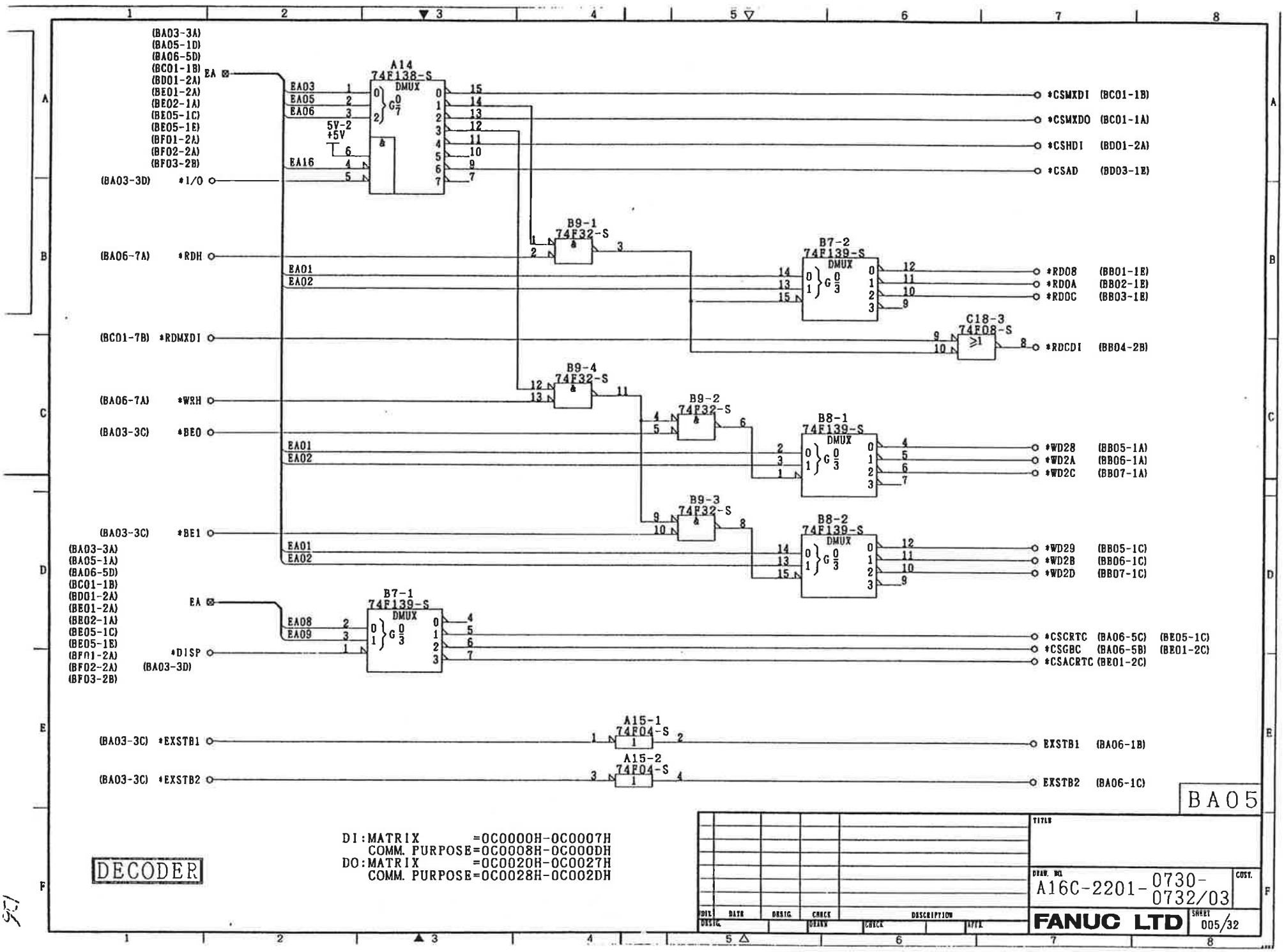
(BA03-3A)
(BA05-1D)
(BA06-5D)
(BC01-1B)
(BD01-2A)
(BE01-2A)
(BE02-1A)
(BE05-1C)
(BE05-1E)
(BF01-2A)
(BF02-2A)
(BF03-2B)
EA
A14
74F138-S
DMUX
EA03
EA05
EA06
EA16
5V-2
+5V
(BA03-3D) *I/O
*CSMXDI (BC01-1B)
*CSMXDO (BC01-1A)
*CSHDI (BD01-2A)
*CSAD (BD03-1E)
B9-1
74F32-S
(BA06-7A) *RDH
EA01
EA02
B7-2
74F139-S
DMUX
*RDO8 (BB01-1E)
*RDOA (BB02-1E)
*RDOC (BB03-1E)
(BC01-7B) *RDMXDI
C18-3
74F08-S
*RDCDI (BB04-2B)
B9-4
74F32-S
(BA06-7A) *WRH
B9-2
74F32-S
(BA03-3C) *BE0
B8-1
74F139-S
DMUX
*WD28 (BB05-1A)
*WD2A (BB06-1A)
*WD2C (BB07-1A)
B9-3
74F32-S
(BA03-3C) *BE1
B8-2
74F139-S
DMUX
*WD29 (BB05-1C)
*WD2B (BB06-1C)
*WD2D (BB07-1C)
(BA03-3A)
(BA05-1A)
(BA06-5D)
(BC01-1B)
(BD01-2A)
(BE01-2A)
(BE02-1A)
(BE05-1C)
(BE05-1E)
(BF01-2A)
(BF02-2A)
(BF03-2B)
EA
B7-1
74F139-S
DMUX
EA08
EA09
*DISP
(BA03-3D)
*CSCRTC (BA06-5C) (BE05-1C)
*CSGBC (BA06-5B) (BE01-2C)
*CSACRTC (BE01-2C)
A15-1
74F04-S
(BA03-3C) *EXSTB1
EXSTB1 (BA06-1B)
A15-2
74F04-S
(BA03-3C) *EXSTB2
EXSTB2 (BA06-1C)
BA05
DI:MATRIX =0C0000H-0C0007H
COMM. PURPOSE=0C0008H-0C000DH
DO:MATRIX =0C0020H-0C0027H
COMM. PURPOSE=0C0028H-0C002DH
DECODER
TITLE
DRAW. NO. A16C-2201-0730-0732/03
COST.
FANUC LTD
SHEET 005/32
DATE
DESIG.
CHECK
DESCRIPTION
APPD.