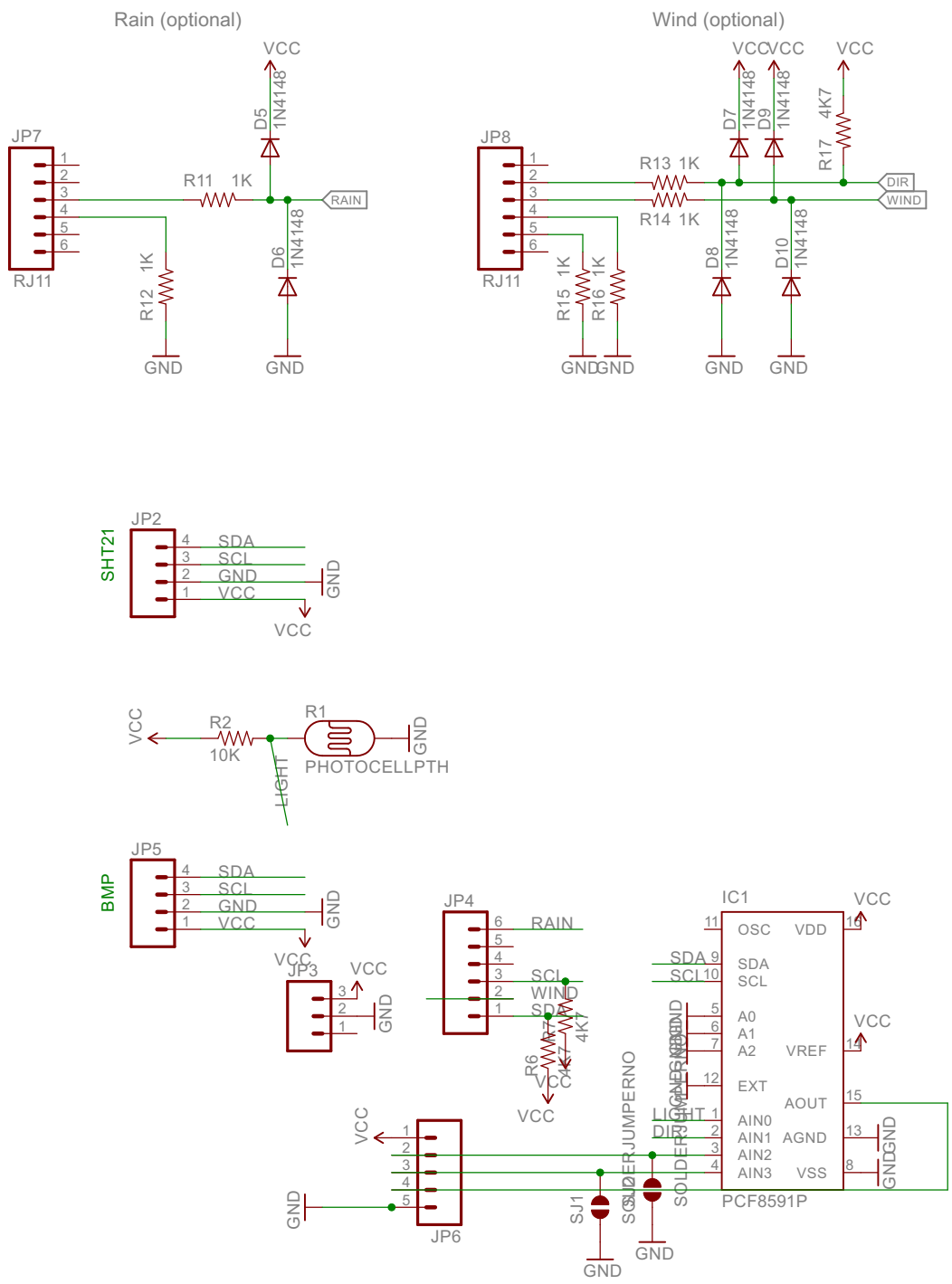
Rain (optional)
Wind (optional)
JP7
RJ11
R11 1K
R12 1K
D5 1N4148
D6 1N4148
RAIN
VCC
GND
JP8
R13 1K
R14 1K
R15 1K
R16 1K
R17 4K7
D7 1N4148
D8 1N4148
D9 1N4148
D10 1N4148
DIR
WIND
JP2
SHT21
SDA
SCL
JP5
BMP
R2 10K
R1
PHOTOCELLPTH
LIGHT
JP3
JP4
R6 4K7
JP6
SJ1
SOLDERJUMPERNO
IC1
PCF8591P
OSC
VDD
VREF
EXT
AOUT
AGND
VSS
AIN0
AIN1
AIN2
AIN3
A0
A1
A2