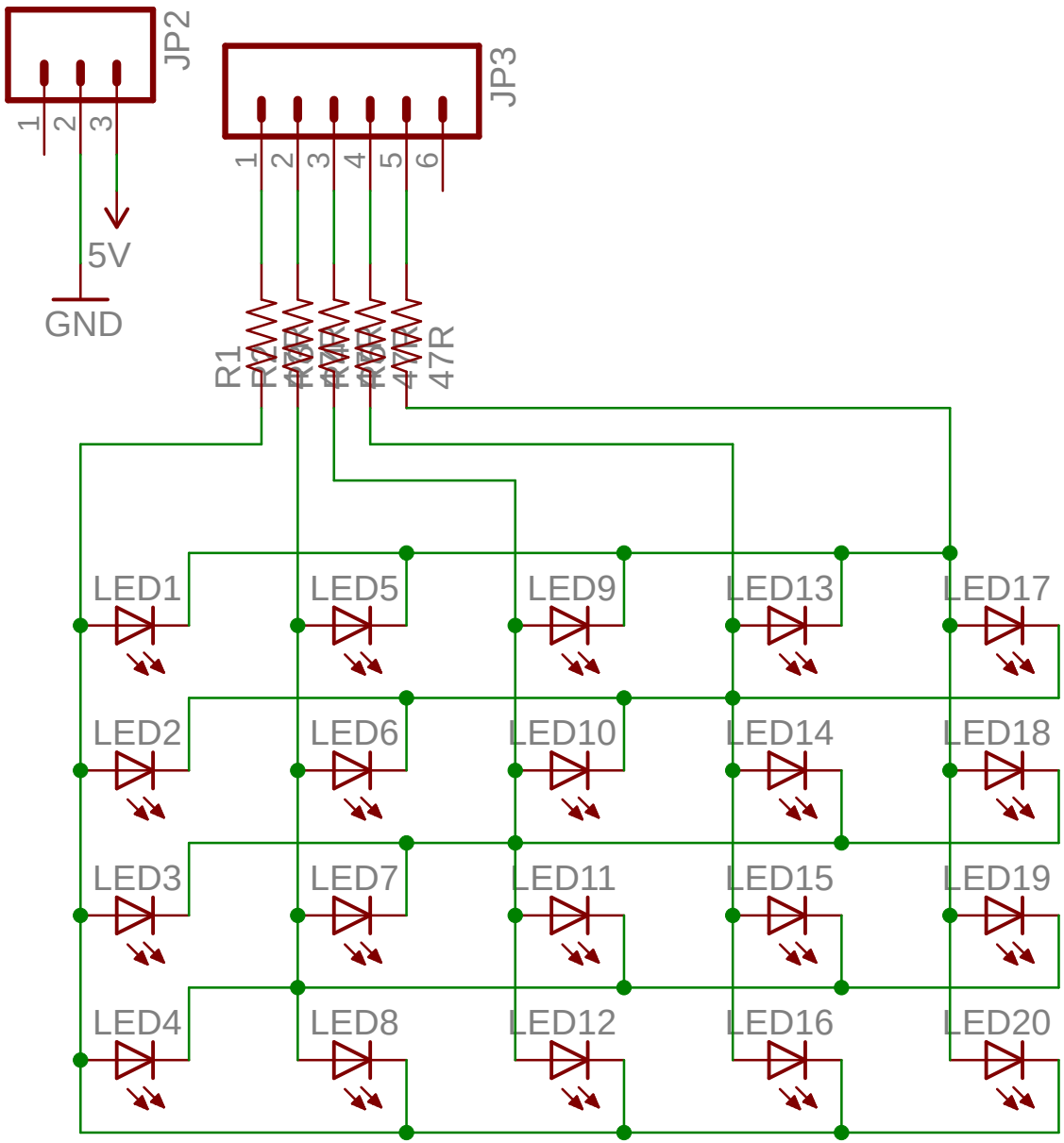

CC-BY-SA 3.0 2012 Erik Kettenburg, Sparr, and Digistump LLC