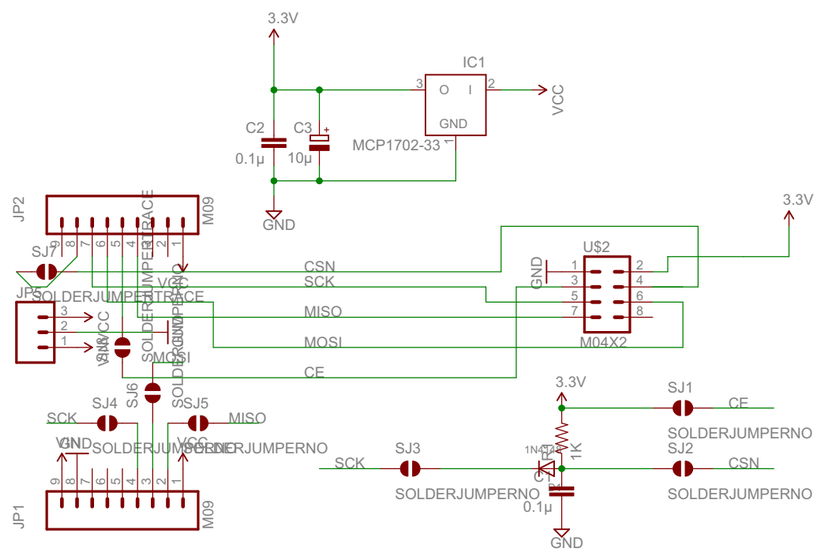
3.3V
IC1
O
I
GND
VCC
C2
0.1µ
C3
10µ
MCP1702-33
GND
JP2
M09
SJ7
JP5
SOLDERJUMPERTRACE
VCC
VIN
SJ6
SJ4
SCK
GND
SOLDERJUMPERNO
SJ5
MISO
VCC
JP1
M09
CSN
SCK
MISO
MOSI
CE
U$2
GND
M04X2
3.3V
SJ1
CE
SOLDERJUMPERNO
SJ2
CSN
SOLDERJUMPERNO
SJ3
SCK
SOLDERJUMPERNO
1N4148
1K
0.1µ
GND