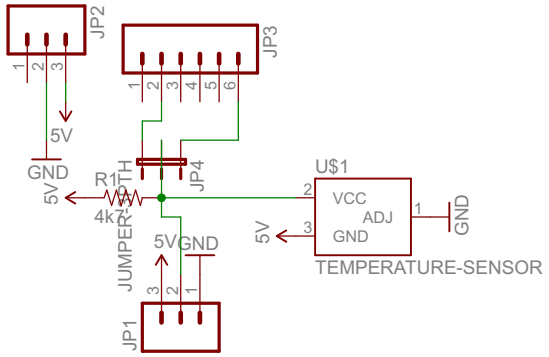
JP2
1
2
3
5V
GND
JP3
1
2
3
4
5
6
JP4
R1
4k7
5V
JUMPER
5V
GND
JP1
3
2
1
U$1
VCC
ADJ
GND
2
1
3
5V
GND
TEMPERATURE-SENSOR