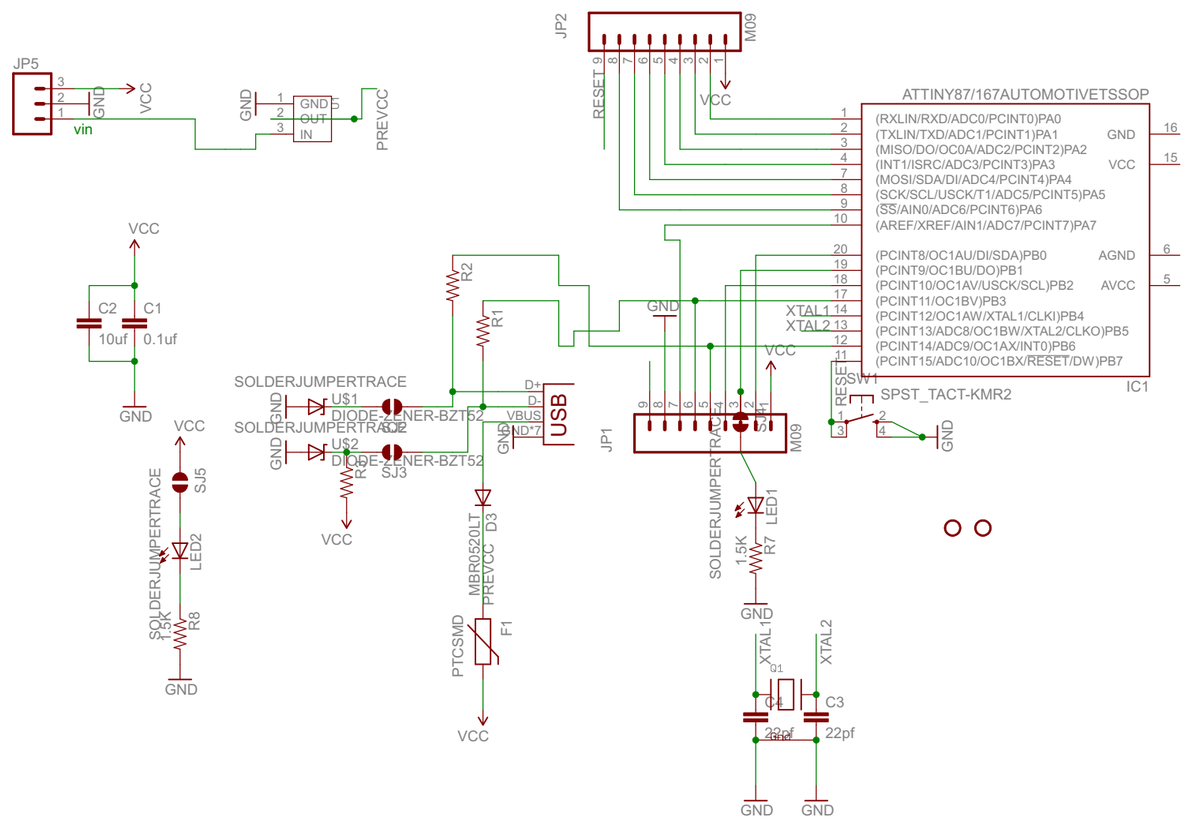
JP5
VCC
GND
vin
GND
OUT
IN
PREVCC
JP2
M09
RESET
VCC
ATTINY87/167AUTOMOTIVETSSOP
(RXLIN/RXD/ADC0/PCINT0)PA0
(TXLIN/TXD/ADC1/PCINT1)PA1
(MISO/DO/OC0A/ADC2/PCINT2)PA2
(INT1/ISRC/ADC3/PCINT3)PA3
(MOSI/SDA/DI/ADC4/PCINT4)PA4
(SCK/SCL/USCK/T1/ADC5/PCINT5)PA5
(SS/AIN0/ADC6/PCINT6)PA6
(AREF/XREF/AIN1/ADC7/PCINT7)PA7
(PCINT8/OC1AU/DI/SDA)PB0
(PCINT9/OC1BU/DO)PB1
(PCINT10/OC1AV/USCK/SCL)PB2
(PCINT11/OC1BV)PB3
(PCINT12/OC1AW/XTAL1/CLKI)PB4
(PCINT13/ADC8/OC1BW/XTAL2/CLKO)PB5
(PCINT14/ADC9/OC1AX/INT0)PB6
(PCINT15/ADC10/OC1BX/RESET/DW)PB7
GND
VCC
AGND
AVCC
IC1
XTAL1
XTAL2
C2
C1
10uf
0.1uf
R2
R1
SOLDERJUMPERTRACE
U$1
DIODE-ZENER-BZT52
U$2
SJ3
R3
D+
D-
VBUS
GND*7
USB
JP1
SW1
SPST_TACT-KMR2
SJ5
LED2
R8
1.5K
LED1
R7
D3
MBR0520LT
PREVCC
PTCSMD
F1
Q1
C4
C3
22pf