CWI LIGHTING

BRIGHTER LIVING. SIMPLIFIED.

PROJECT: _____

FIXTURE TYPE: _____

LOCATION: _____

CONTACT/PHONE: _____

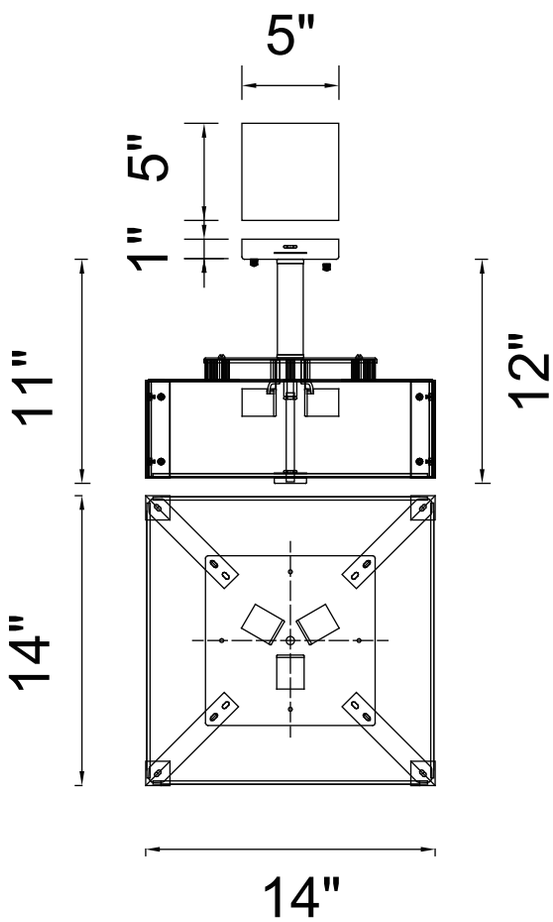

Item	5571P14C-S
Collection	LUCIE
Finish	Chrome
Glass	Frosted
Crystal	------
Input	120V AC,60HZ,AC

Shade	------
Length/Dia.	14"
Width/Ext.	14"
Height	------
Maximum	12"
Lumens	------

Light Source	E26
Bulb Info.	3×60W
Included	------
Dimmable	No
Color	------
Weight	

CWI LIGHTING
www.cwilighting.com
Info@cwilighting.com

140 Steelcase Rd.W.
Markham ON. L3R 3J9 Canada
Tel: 905 940 4999
Toll: 1-877-564-6034
Fax:905-940-0126
Toll Fax: 1-866-840-2796

Dallas showroom
Dallas Market Center
Showroom #: 3327
2100N. Stemmons Frwy.
Dallas, TX 75207