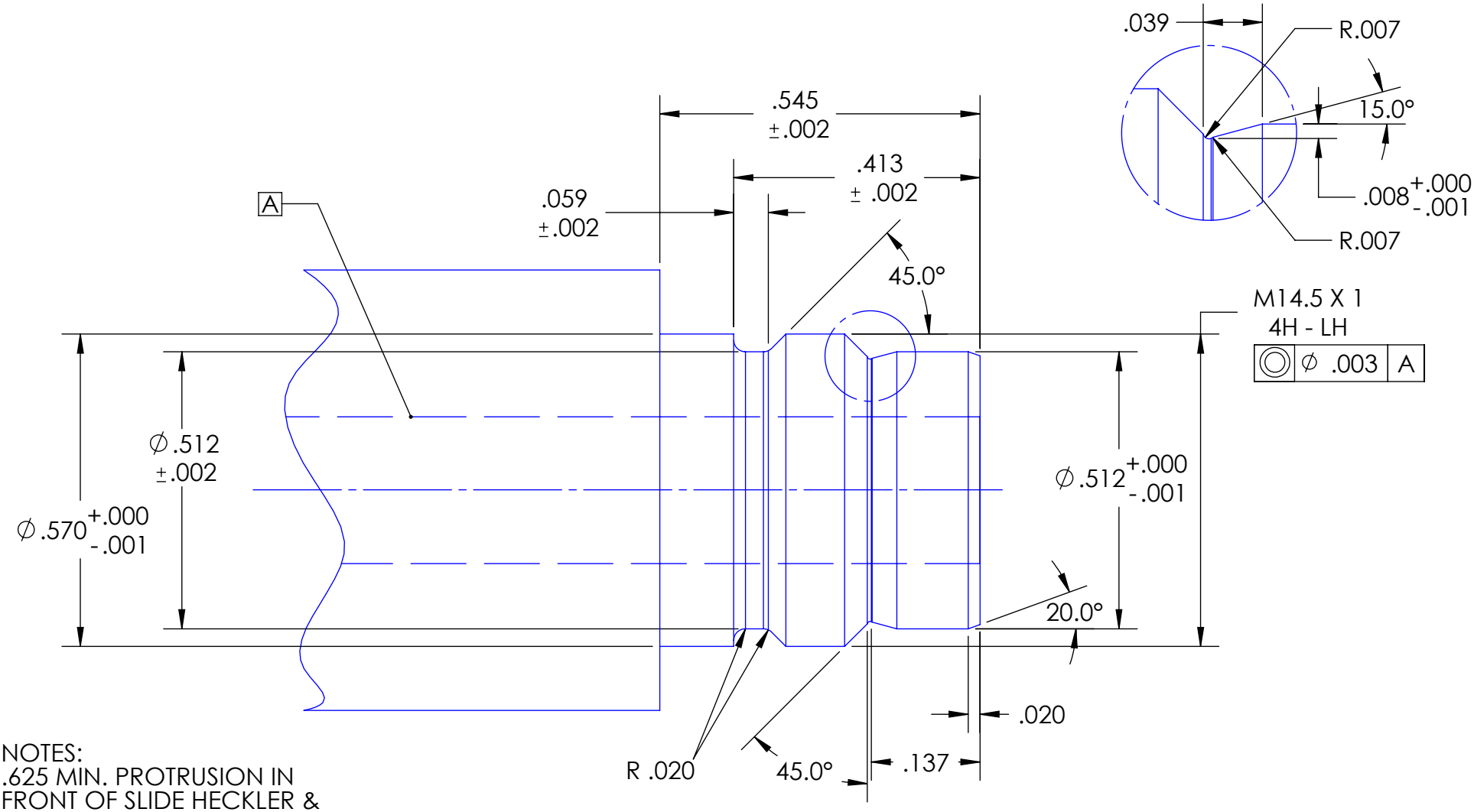

NOTES:
.625 MIN. PROTRUSION IN FRONT OF SLIDE HECKLER & KOCH USP SERIES, GLOCK 22, 23 & .40 S&W

		UNLESS OTHERWISE SPECIFIED:		NAME	DATE
		DIMENSIONS ARE IN INCHES TOLERANCES: FRACTIONAL ±0.1 ANGULAR: ±0.1 TWO PLACE DECIMAL ±0.01 THREE PLACE DECIMAL ±0.001	DRAWN		
			CHECKED		
			ENG APPR.		
			MFG APPR.		
		INTERPRET GEOMETRIC TOLERANCING PER:	Q.A.		
		MATERIAL	COMMENTS:		
NEXT ASSY	USED ON	FINISH			
APPLICATION		DO NOT SCALE DRAWING			

PROPRIETARY AND CONFIDENTIAL

THE INFORMATION CONTAINED IN THIS DRAWING IS THE SOLE PROPERTY OF SILENCERCO LLC. ANY REPRODUCTION IN PART OR AS A WHOLE WITHOUT THE WRITTEN PERMISSION OF SILECERCO LLC IS PROHIBITED.

SILENCERCO

TITLE:

M14.5 x 1 - LH

SIZE	DWG. NO.	REV
A		

SCALE: 1:1 | WEIGHT: | SHEET 1 OF 1

5 4 3 2 1