ROBOTIQ

HAND-E

Original Notice

© 2024 Robotiq, Inc.

Robotiq Hand-E
for TM Series Robots

Instruction Manual

LEAN ROBOTICS

robotiq.com | leanrobotics.org

Revisions 4
1. General Presentation 7
1.1. Gripper nomenclature 8
1.2. Object picking 10
1.3. Setup and control 11
2. Safety 12
2.1. Warning 13
2.2. Intended Use 13
3. Installation 14
3.1. Scope of Delivery 15
3.2. Required Tools and Equipment 17
3.3. Environmental and Operating Conditions 18
3.4. Mechanical Installation 19
3.5. Electrical Setup 26
4. Control 33
4.1. Overview 33
4.2. Gripper Register Mapping 35
4.3. Robot Output Registers & Functionalities 36
4.4. Robot Input Registers and Status 38
4.5. Picking Features 42
4.6. Control Logic Example 45
4.7. Modbus RTU Communication 45
4.8. Hand-E Gripper and I/O Coupling communication 59
4.9. Control over TM 60
5. Specifications 80
5.1. Technical dimensions 81
5.2. Mechanical Specifications 88
5.3. Electrical specifications 95
6. Maintenance 96
6.1. Gripper cleaning 98
6.2. Periodic inspection 99

6.3. Rack & pinion mechanism cleaning 100
7. Spare Parts, Kits and Accessories 102
8. Troubleshooting 106
8.1. Using the Robotiq User Interface (RUI) 106
8.2. Troubleshooting TM Models 106
9. Warranty and Patent 107
9.1. I/O Coupling Warranty 108
10. Harmonized Standards, Declarations and Certificates 110
10.1. EC declaration of incorporation 110
10.2. Applied standards 111
10.3. Ingress Protection Certificate 112
11. License Agreement 113
12. Contact 116

Revisions

Robotiq may modify this product without notice, when necessary, due to product improvements, modifications or changes in specifications. If such modification is made, the manual will also be revised, see revision information. See the latest version of this manual online at robotiq.com/support.

Revision 2024/03/23

- Updated the Specifications section to account for the change in Gripper payload.
- Updated the Mechanical Installation section to include wiring for S Series controllers.

Revision 2021/07/01

- Section " Installation"
  - Added section 3.4.4 " Installing Fingertip Extenders on the Gripper"
  - Updated subsection 3.4.1 " Single Gripper Installation"
- Section " Specifications"
  - Updated subsection 5.1.3 " Fingertips Extenders" , maximum opening is now 98 mm
  - Updated section 5.2.1
  - Updated section 5.2.3
- Section " Spare Parts, Kits and Accessories"
  - Hand-E SKU is now HND-GRP

Revision 2020/05/28

- Minor Revision: modifications to standardize our manuals
- Section " Warranty and Patent"
  - Cycle count is now 5 000 000.
  - Consumable parts are now excluded of the warranty.
- Section " Specifications"
  - Updated subsection " Mechanical Specifications"
  - Updated subsection " Electrical Specifications"
  - Updated subsection " Technical Dimensions"
- Section " Harmonized Standards, Declarations and Certificates"
  - Updated subsection " EC declaration of incorporation"
  - Updated subsection " Applied Standards"

Revision 2019/12/19

- Section " Control"
  - Updated text and images in subsection " TM Gripper Components" with current names of TM components
  - Revised data on register and bits in subsection " Modbus RTU Communication"
- Section " Specifications"
  - Updated subsection " Mechanical Specifications"
  - Updated subsection" Couplings"
- Section " Troubleshooting"
  - Rewrote section, formatted troubleshooting instructions in tables
  - Added subsection " Troubleshooting with RUI"
  - Added subsection " Troubleshooting TM Models"
- Removed Section 5: User Interface

Revision 2019/11/06

Addition of the Techman Robots Wrist Connection Kit (I/O Coupling)

Revision 2019/10/10

- Addition of the Electrostatic Discharge Safety section

Revision 2019/05/03

- Updated environmental and operating conditions (Section 3.3)

Revision 2019/03/13

- Updated mechanical specifications (Section 6.2)

Revision 2019/02/19

- Updated Sections 4 and 6 to modify the grip force

Revision 2018/12/10

- First publication of the Instruction Manual.

Copyright

© 2018 - 2024 Robotiq Inc. All rights reserved.

This manual and the product it describes are protected by the Copyright Act of Canada, by laws of other countries, and by international treaties, and therefore may not be reproduced in whole or in part, whether for sale or not, without prior written consent from Robotiq. Under copyright law, copying includes translation into another language or format.

Information provided by Robotiq in this document is believed to be accurate and reliable. However, no responsibility is assumed by Robotiq for its use. There may be some differences between the manual and the product if the product has been modified after the edition date.

The information contained in this document is subject to change without notice.

1. General Presentation

The terms "Gripper", "Robotiq Gripper", "Hand-E Gripper" and "Hand-E" used in this manual are used interchangeably to designate the "Robotiq Hand-E Gripper". The Robotiq Hand-E Gripper is a robotic peripheral designed for industrial applications. It is a unique robotic end-of-arm tool designed to quickly pick, place and handle parts in a broad range of sizes and shapes.

Info

This manual uses the metric system. Unless otherwise specified, **all dimensions are in millimeters**.

Info

The following section presents the key features of the Gripper and must not be considered as appropriate to Gripper operation, each feature is detailed in the appropriate section of the manual. Safety guidelines must be read and understood before any operation is attempted with the Gripper.

11 Gripper nomenclature

The Hand-E Gripper is a parallel gripper. Its two fingers are actuated by a single motor.

Fig. 1-1: Robotiq Hand-E Gripper.

Please refer to the **Scope of Delivery** section and **Spare Parts, Kits and Accessories** section for details on standard and optional parts. The Hand-E basic gripper unit includes flat aluminum fingers overmolded with NBR.

The status LED presented in the figure above will be :

- solid blue/red when booting
- solid blue when powered with no errors (while communication is active)
- solid red if minor fault occurs, see status details in the **Control** section.
- blinking red/blue if major fault occurs, see status details in the **Control** section.

The user can install fingers directly on the racks, or fasten fingertips to fingertip holders, which are in turn installed on the racks. Refer to the **Installing the Gripper on the Robot** section for more information on how to integrate custom fingers and fingertips to Hand-E.

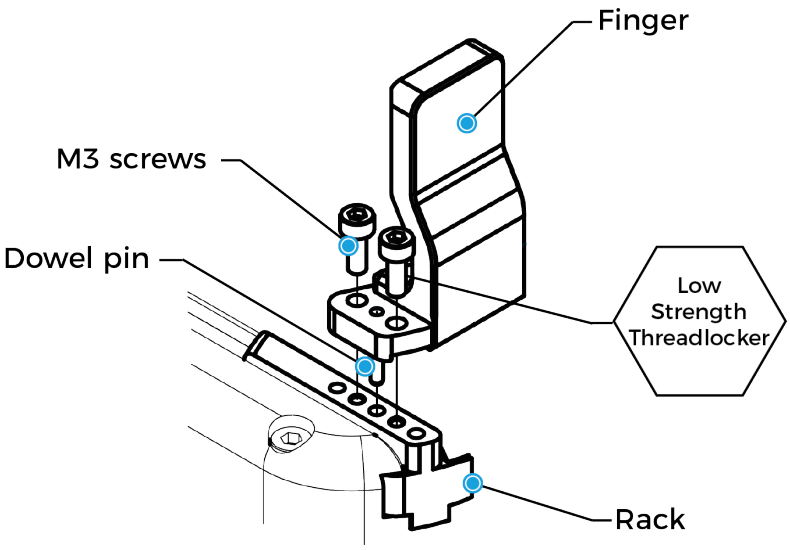

Fig. 1-2: Mounting a finger on a rack.

When ordered as a kit (please refer to the **Scope of Delivery** section), a fingertip starting kit is included (please refer to the **Spare Parts, Kits and Accessories** section). These fingertips should be mounted onto fingertip holders.

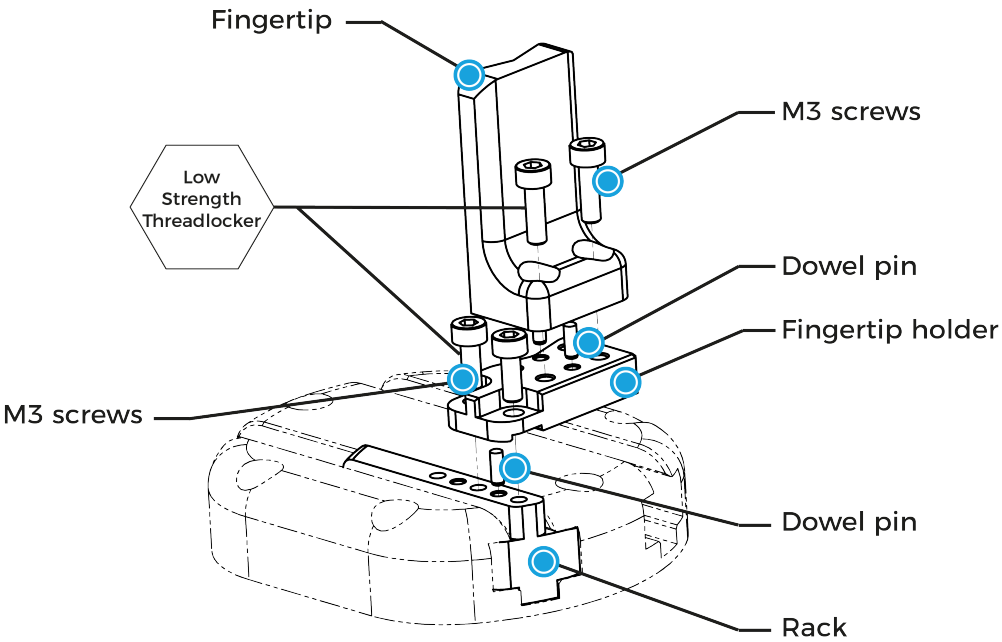

Fig. 1-3: Mounting a fingertip on a fingertip holder (example).

Tip

You can customize fingers and fingertips. Mount custom fingers on racks, and fingertips on fingertip holders.

12. Object picking

The Hand-E Gripper has a single actuator for opening and closing the fingers. It also allows internal gripping. The fingers can pick hollow parts from the inside by applying pressure with the outer surface of the fingers.

See the figure below for a representation and refer to the **Picking Features** section for details on avaible position commands for your gripper.

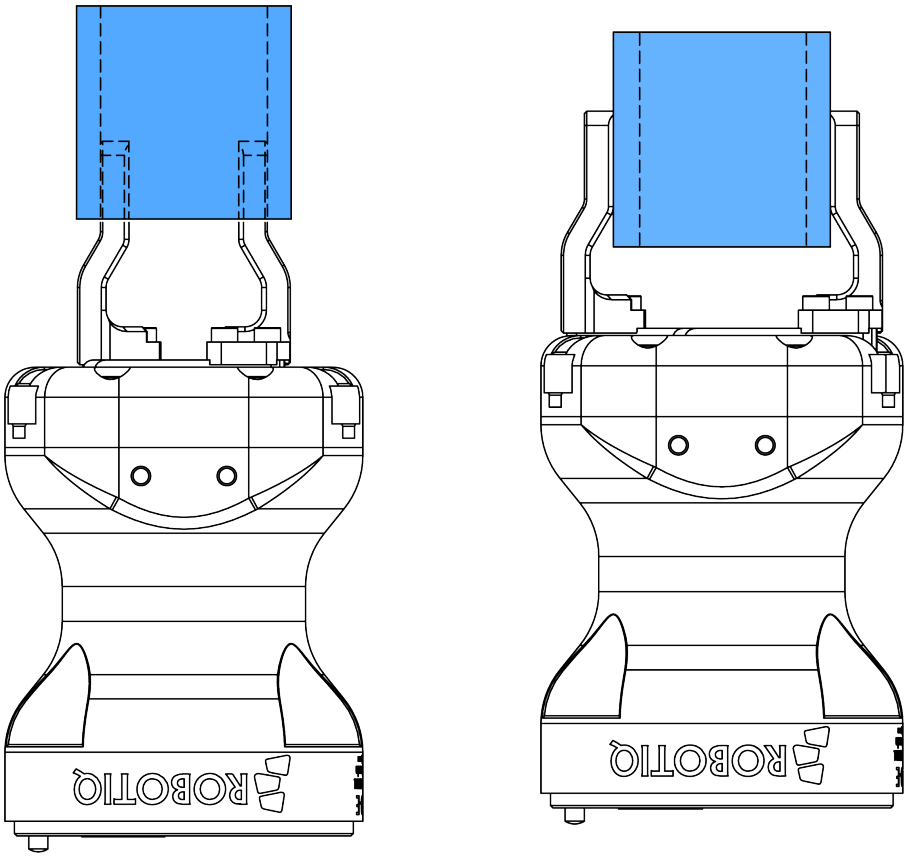

Fig. 1-4: Hand-E Gripper internal and external gripping.

13. Setup and control

The Gripper is powered and controlled directly via a single device cable that carries a 24V DC supply and Modbus RTU communication over RS-485. Refer to the **Electrical Setup** section for wiring information and the **Control** section for control of the gripper (software packages are available for control via some types of robot controllers).

A gripper coupling is required for using Hand-E; the coupling will provide mechanical and electrical connectivity. Please refer to the **Mechanical Installation** section for installation of the coupling, to the **Specifications** section for technical drawings, and to the **Spare Parts, Kits and Accessories** section for available couplings.

The Hand-E Gripper has an embedded object detection feature using indirect sensing methods. When picking an object with the "go to" command, the gripper status will allow you to know if an object is picked or not via a simple object detection bit (0 or 1). When an object is detected, the gripper will stop. If the object is being dropped, the gripper will automatically close to keep the object until the object is detected or until the position target from the "go to" command is reached. For details on object detection, see the **Control** section.

2. Safety

Warning

The operator must have read and understood all of the instructions in the following manual before handling the Robotiq Hand-E Gripper.

Info

The term "operator" refers to anyone responsible for any of the following operations on the Robotiq Hand-E Gripper:

- Installation
- Control
- Maintenance
- Inspection
- Calibration
- Programming
- Decommissioning

This documentation explains the various components of the Robotiq Hand-E Gripper and general operations regarding the whole life-cycle of the product from installation to operation and decommissioning.

The drawings and photos in this documentation are representative examples; nonetheless, discrepancies may be observed between those and the delivered product.

2.1. Warning

Caution

Any use of the Gripper in noncompliance of these warnings is inappropriate and may cause injury or damage.

Warning

- The Gripper needs to be properly secured before operating the robot.
- Do not install or operate a Gripper that is damaged or lacking parts.
- Never supply the Gripper with an alternative current source.
- Make sure all cord sets are always secured at both ends, at the Gripper and at the robot.
- Always meet the recommended keying for electrical connections.
- Make sure no one is in the robot and/or Gripper path before initializing the robot's routine.
- Always meet the Gripper's payload specifications.
- Set the Gripper's pinch force and speed accordingly, based on your application.
- Keep fingers and clothes away from the Gripper while the power is on.
- Do not use the Gripper on people or animals.
- For welding applications, make sure there are no Gripper parts on the ground path of the welding power source.

2.1.1. Risk assessment and final application:

The Robotiq Hand-E Gripper is meant to be used on an industrial robot. The robot, Gripper and any other equipment used in the final application must be evaluated with a risk assessment. It is the robot integrator's duty to ensure that all local safety measures and regulations are met. Depending on the application, there may be risks that require additional protection/safety measures, for example, the work-piece the gripper is manipulating might be inherently dangerous to the operator.

2.2. Intended Use

The gripper unit is designed for gripping and temporarily securing or holding objects.

The product is intended for installation on a robot or other automated machinery and equipment.

Info

Always comply with local and/or national laws, regulations and directives on automation safety and general machine safety.

The unit should be used exclusively within the range of its technical data. Any other use of the product is deemed improper and unintended use. Robotiq will not be liable for any damages resulting from any improper or unintended use.

3. Installation

The following subsections will guide you through the installation and general setup of your Robotiq Hand-E Gripper.

- The **Scope of Delivery** section
- The **Required Tools and Equipment** section
- The **Environmental and Operating Conditions** section
- The **Mechanical Installation** section
- The **Electrical Setup** section
- The **Installation** section

Warning

Before installing:

- Read and understand the safety instructions related to the Hand-E Gripper.
- Verify your package according to the scope of delivery and your order.
- Have the required parts, equipment and tools listed in the requirements readily available.

Warning

When installing:

- Meet the recommended environmental conditions.
- Do not operate the Gripper, or even turn on the power supply, before it is firmly anchored and the danger zone is cleared. The fingers of the gripper may move and cause injury or damage.

3.1 Scope of Delivery

Caution

The following is not included as part of a standard delivery:

- Options such as adapter plates or couplings for mounting on various industrial robots, fingertips or finger pads.
- Hardware required for options; accessories or fixtures for the gripper, unless specified.
- Power supply units, power supply wiring or fuses.

Info

When bought as a kit, the gripper will come in a package with the appropriate coupling, fingers/fingertips and cabling. Please refer to the **Spare Parts, Kits and Accessories** section.

3.1.1 Robotiq Hand-E TM Kit

Standard upon delivery

- Robotiq Hand-E basic gripper unit (**HND-GRP**)
  - Hand-E gripper
  - Hand-E NBR overmolded aluminum fingers kit
  - Screw kit
- Hand-E Fingertip Starting Kit (**HND-TIP-START-KIT**)
- RS485 to RS232 signal converter (**ACC-ADT-RS232-RS485**)
- RS485 adapter for S Series controllers (**ACC-ADT-RS485-S-SERIES**)
- USB to RS485 signal converter (**ACC-ADT-USB-RS485**)
- Robotiq device cable (**CBL-COM-2065-10-HF**)
- Coupling for connection to the robot controller (**GRP-CPL-062**)

3.1.2. Techman Robots Wrist Connection Kit

Hand-E Wrist Connect Kit for Techman Robots (HND-TM-KIT-W)

Standard upon delivery

- Robotiq Hand-E Basic Gripper Unit (**HND-GRP**)
- I/O Coupling Kit (**IO-CPL-TM-KIT**) :
  - I/O Coupling (IO-CPL-CB)
  - Screw Kit to install on the robot
  - Micro-USB to USB cable
  - 16 GB USB stick
- Hand-E Fingertip Starting Kit (**HND-TIP-START-KIT**)

> **Info**
>
> When bought as a kit, the Hand-E Gripper will come in a package with the appropriate coupling, fingers/fingertips and cabling. Please refer to the **Spare Parts, Kits and Accessories** section.

3.2. Required Tools and Equipment

The following tools are required to install the Hand-E Gripper:

- 4 mm hex key to mount the gripper onto its coupling or the I/O Coupling.
- Metric hex key according to your coupling to mount the coupling onto the robot.

Optional tools if installing fingertip/holder kits: **HND-FIN-ALU-KIT**, **HND-TIP-VGR-KIT** or **HND-TIP-HLD-KIT**

- 2,5 mm hex key

The gripper needs to be supplied by a DC voltage source. This power supply is not included with the gripper. Required power supply must match the Robotiq device. The following table shows the specifications with regards to the power supply required to operate the gripper and the optional Robotiq Controller.

SPECIFICATION	VALUE
Output voltage	24 V DC ±10%
Output current	1 A
Overcurrent	Recommended power supply with internal protection, otherwise fusing is required. 2 A fuse at 25°C [77°F][1]

Table 3-1: Hand-E power supply requirements.

Info

[1] Suggested fuse is a: Phoenix Contact # 0916605 2 A thermal, use AWG #20 wiring.

Warning

If your power supply could exceed the specified regulation, over-voltage protection is required.

Robotiq recommends the use of the following power supplies:

- For the 1A output current: TDK-Lambda DPP Series, *100W Single Output DIN Rail Mount Power Supply*: **DPP30-24**.

Tip

Optional Robotiq Universal Controller can use the same power supply.

3.3. Environmental and Operating Conditions

CONDITION	VALUE
Minimum storage temperature	-30°C [-22°F]
Maximum storage temperature	70°C [158°F]
Minimum operating temperature	-10°C [14°F]
Maximum operating temperature	50°C [122°F]
Humidity (non-condensing)	20-80% RH
Maximum vibration (storage/transit)	5G
Maximum vibration (operating)	2G
IP Rating	IP 67
Other	• Free from corrosive liquids or gases • Free from explosive liquids or gases • Free from powerful electromagnetic interference

Table 3-2: Environmental and operating conditions of the Hand-E Gripper.

3.4. Mechanical Installation

3.4.1 Installing the Gripper on the Robot

Single Gripper Installation

Instructions

You must use a coupling to attach the gripper on the robot. Here are the steps to follow to mount the gripper on the robot (exploded views in the figure below).

1. Secure the gripper coupling on the robot wrist, and use the coupling dowel pin to align parts.
2. Secure the gripper to the coupling.

> **Caution**
>
> When no tooth lock washer is present, lock screws in place using medium strength threadlocker. Tooth lock washers provide grounding for the casing of the gripper through the mounting screws. For more information, refer to the **Electrostatic Discharge Safety** section.

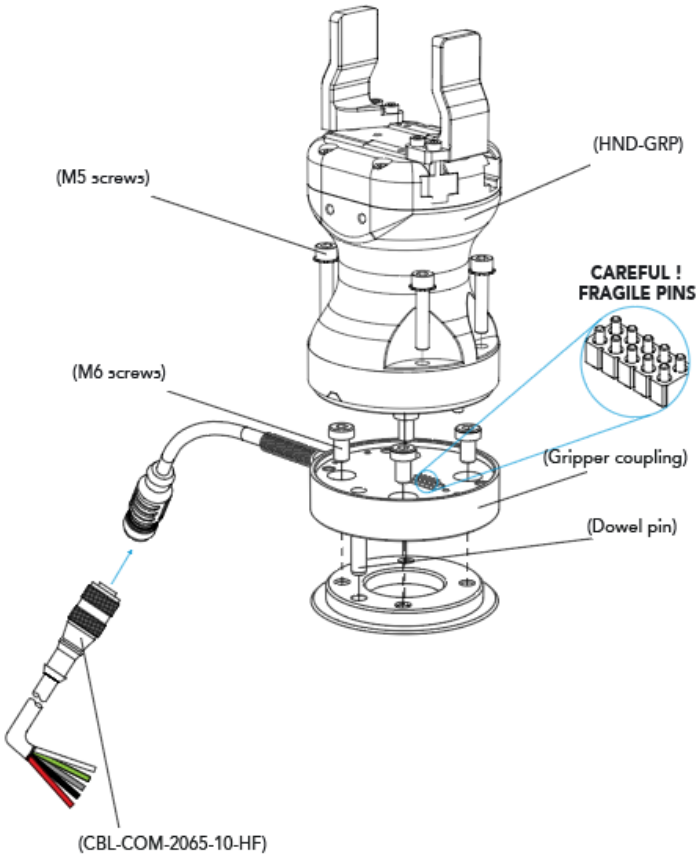

Fig. 3-1: Installing Hand-E on the robot tool flange

Installation with the Techman Robots Wrist Connection Kit (I/O Coupling)

I/O Coupling: General Presentation and Nomenclature

The **Robotiq I/O Coupling** is a robotic peripheral designed to allow a direct connection of the Robotiq Hand-E Gripper to the Techman Robots tool flange. It removes the need of any cable management and avoids downtime caused by cable issues. The robot sends I/O signals to the coupling which sends Modbus RTU commands to the gripper based on four possible presets. The presets are determined by the I/O signals.

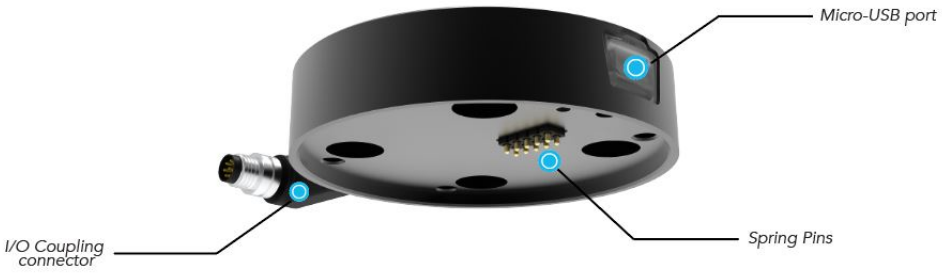

Fig. 3-2: Robotiq I/O Coupling

The status LED, integrated in the micro-USB port presented in the figure above, will be:

- **Solid blue/red** when booting
- **Solid red** when looking for product or waiting for communication
- **Solid blue** when powered with no errors (while communication is active)
- **Solid green** when communicating with USB

> **Info**
>
> The object detection feature remains available with the I/O Coupling. The position feedback, however, is not available due to the robot tool connector nature.

The I/O Coupling comes with four (4) factory presets, as shown in the table below. These presets can be reconfigured on a computer before using them on a robot.

> **Info**
>
> To configure your own presets, please follow the instructions in the Robotiq User Interface (RUI) manual, available on support.robotiq.com.

	Preset 1	Preset 2	Preset 3	Preset 4
Position	100	0	100	0
Speed	100	100	0	0
Force	100	100	1*	1*

*To preserve object lost detection, force is not set to 0.

Table 3-3: Presets for Hand-E Gripper

Installing the I/O coupling

Mounting the I/O Coupling

1. Insert the provided dowel pin into the tool flange.
2. Mount the I/O Coupling on the robot tool flange. Align it properly with the dowel pin.
3. Use the provided M6 screws, the M6 tooth lock washers, and the 4mm hex key to secure the I/O Coupling.

Mounting the Gripper onto the I/O Coupling

1. Fasten the gripper onto the I/O Coupling using the M5 screws and tooth lock washers of the gripper.

> **Caution**
>
> Be careful with the fragile pins while installing the gripper onto the I/O Coupling. Any abrupt movement can damage the pins and lead to product malfunction.

2. Plug the I/O Coupling connector into the robot tool flange connector.

> **Caution**
>
> Make sure to close the silicone door of the I/O coupling micro-USB port to prevent any dust or liquid infiltration.

Firmware Update

> **Warning**
>
> A gripper firmware update may be required to use your Hand-E Gripper with the I/O Coupling. Make sure you have the latest version installed.

1. Connect the Hand-E Gripper to your computer via the I/O Coupling using the USB cable. If the I/O coupling got wet, make sure the micro USB port is properly dryed before connecting the USB cable.
2. Run the Robotiq User Interface (RUI) to update the firmware.

You can now use your gripper with the four (4) factory presets on the I/O Coupling. You can also program and save your own presets by connecting the I/O Coupling to your computer using the USB cable. To do so, refer to the Robotiq User Interface Manual available at robotiq.com/support.

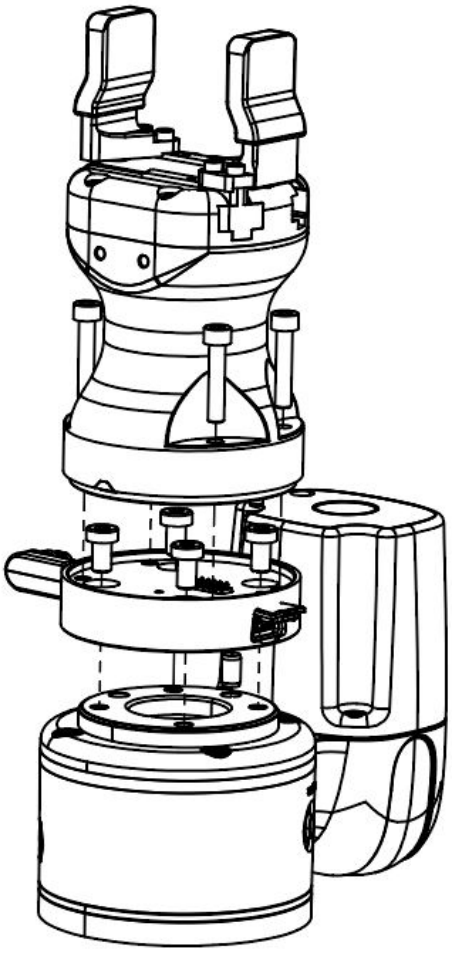

Fig. 3-3: Mechanical installation of the I/O Coupling and the Hand-E Gripper

Multiple Grippers Installation

When installing multiple grippers on one robot, every gripper must have its own coupling.

1. Install the mounting plate on the robot arm (AGC-APL-159-02).
2. Mount the grippers' couplings on the mounting plate using the provided M6 X 12mm screws and tooth lock washers.
3. Mount the grippers onto the coupling using the provided M5 X 25 mm screws and tooth lock washers.

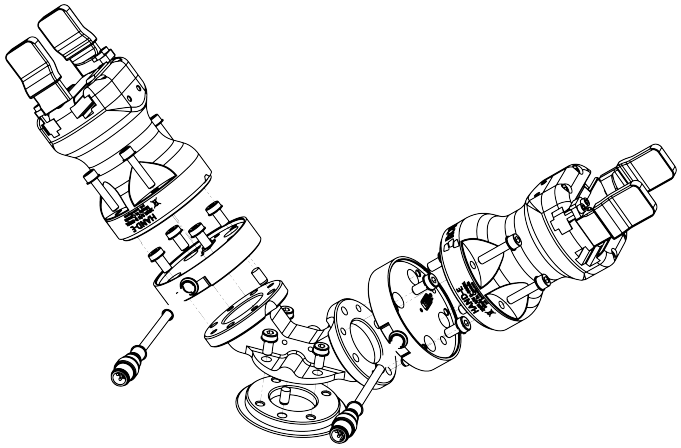

Fig. 3-4: Dual Hand-E Gripper Configuration

3.4.2. Installing Fingers on the Gripper

If you need to change the fingers, follow the instructions below.

1. Align the finger dowel pin with the finger dowel hole.
2. Apply low strength threadlocker on the provided screws and secure the finger to the rack.
3. Repeat for the second finger, if necessary.

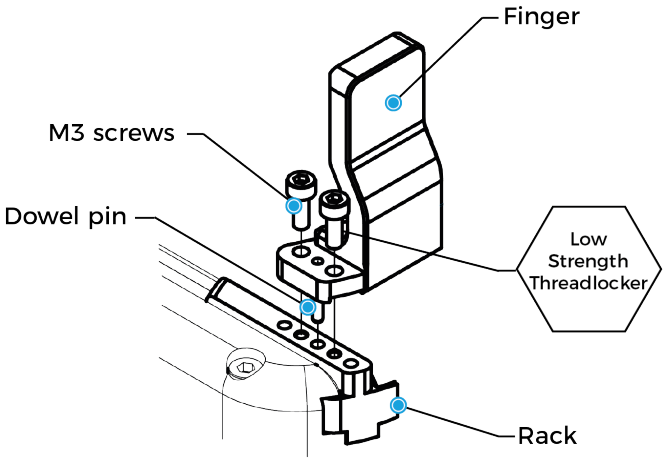

Fig. 3-5: Mounting fingers on racks.

3.4.3. Installing Fingertips and Holders on the Gripper

If you need to change the fingertips and holders, follow the instructions below.

1. Align the fingertip holder dowel pin with the rack dowel hole.
2. Apply low strength threadlocker on the provided screws and secure the fingertip holder to the rack.
3. Align the fingertip dowel pin with the fingertip holder dowel hole.
4. Apply low strength threadlocker on the provided screws and secure the fingertip to the fingertip holder.
5. Repeat for the second fingertip, if necessary.

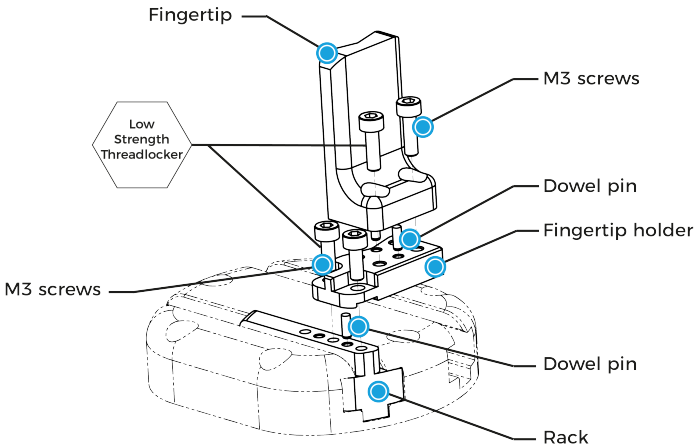

Fig. 3-6: Mounting fingertips on holders, and holders on racks.

3.4.4. Installing Fingertip Extenders on the Gripper

If you need to add extenders to the Gripper, follow the instructions below.

1. Align the extender dowel pin with the rack dowel hole.
2. Apply low strength threadlocker on the provided M3 screws and secure the extender to the rack (0.50 Nm / 4.40 in-lb).
3. Align the fingertip dowel pins with extender dowel holes.
4. Apply low strength threadlocker on the provided M5 screw and secure the fingertip to the extender (5.65 Nm / 50.00 in-lb).
5. Repeat for the second fingertip if necessary.

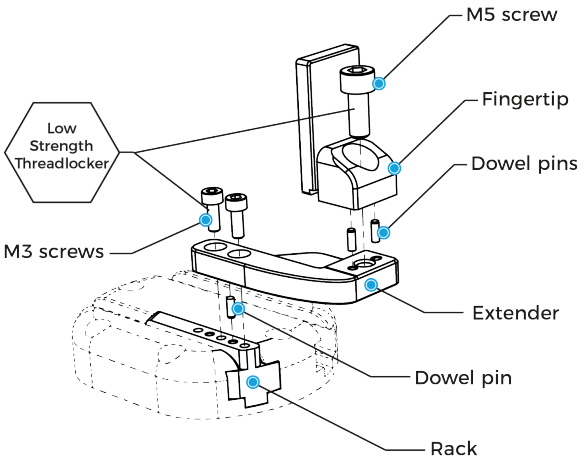

Fig. 3-7: Mounting extenders on fingers , and extenders on racks.

3.5. Electrical Setup

Power and communication are established with the Hand-E Gripper via a single device cable. The device cable provides a 24V power supply to the gripper and enables serial RS485 communication to the robot controller.

> **Info**
>
> RS485 signals (485+, 485- and 485 GND) are isolated from the main 24V power supply. GND can be connected to any other ground reference as long as the voltage potential between the grounds does not exceed 250V. Grounding reference is at the user's discretion.

3.5.1 Electrostatic Discharge Safety

Robotiq Hand-E Gripper is not ESD safe. If installed properly using the tooth lock washers, the casing and internal mechanism are grounded through the screws used to mount the gripper on the coupling. The same is true for the coupling. For the Hand-E Gripper, the top part mounted on the casing using 6 screws, the fingertips and rails are isolated from the rest of the gripper. It is therefore not possible to discharge any electrostatic charge that would build up on the part through the gripper.

3.5.2. Pinout Interface

The gripper interfaces with its coupling via a 10-spring pin connector located on its outer surface.

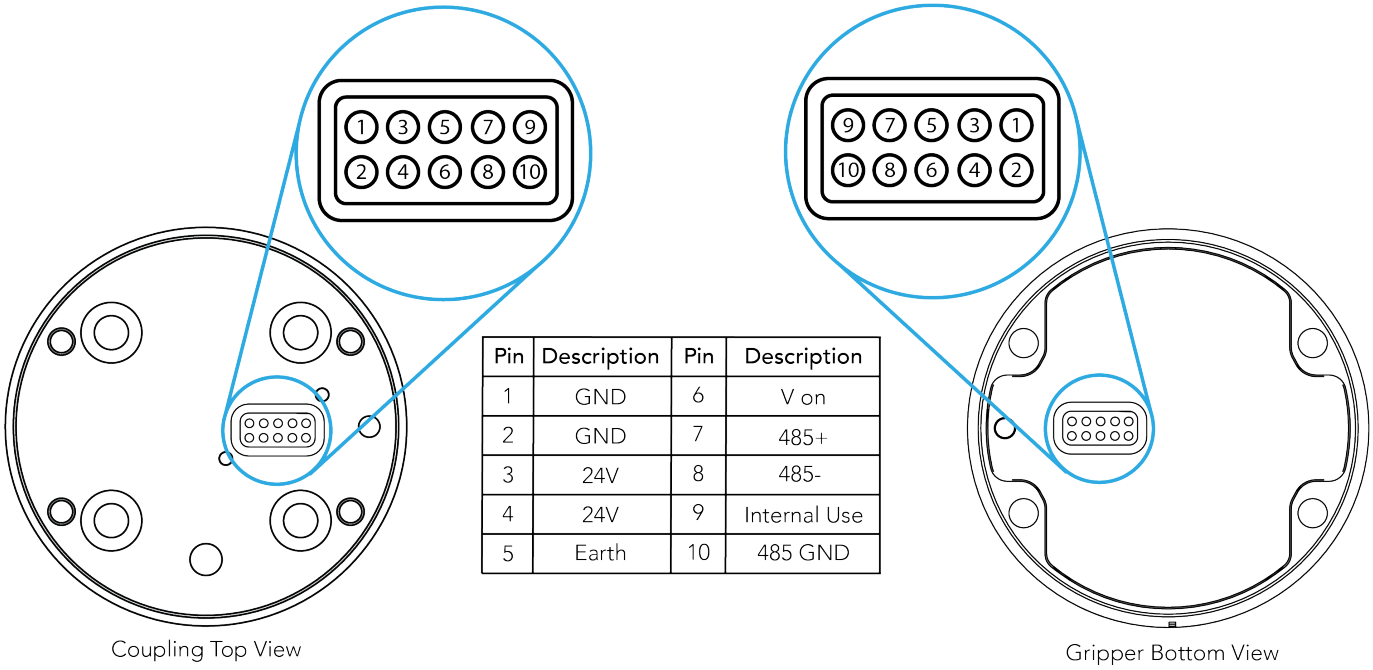

Pin	Description	Pin	Description
1	GND	6	V on
2	GND	7	485+
3	24V	8	485-
4	24V	9	Internal Use
5	Earth	10	485 GND

Fig. 3-8: Pinout to the Hand-E Gripper cable-to-wrist coupling.

3.5.3. Coupling to Controller

To connect a gripper to a network or robot controller via fieldbus communication, you can use the Robotiq Universal Controller . For details on the Robotiq Universal Controller, see its Instruction Manual on robotiq.com/support.

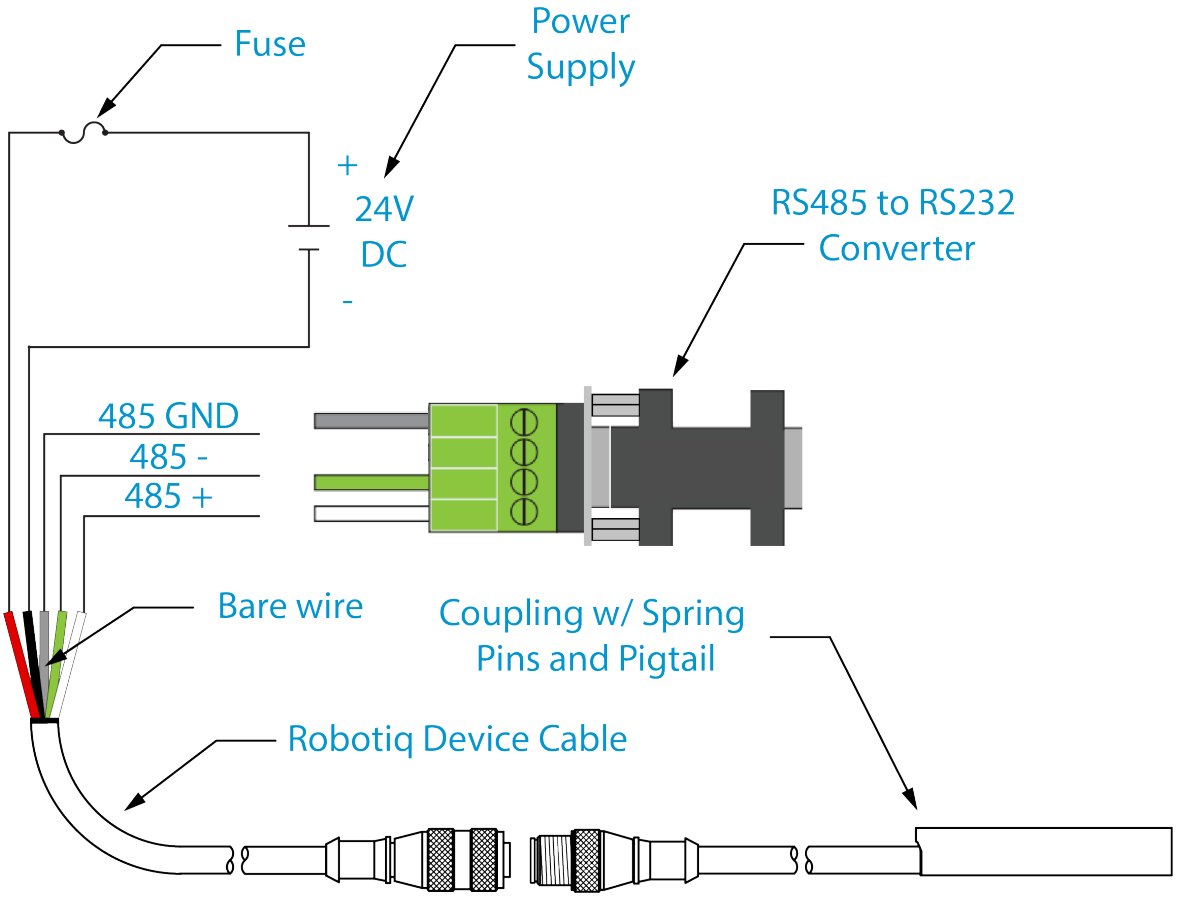

Fig. 3-9: Wiring diagram of Hand-Efor robots requiring a RS485 to RS232 converter. Includes a device cable, power supply, fuse and ground.

In addition to the converter, a RS485 adapter is also available for S Series controllers.

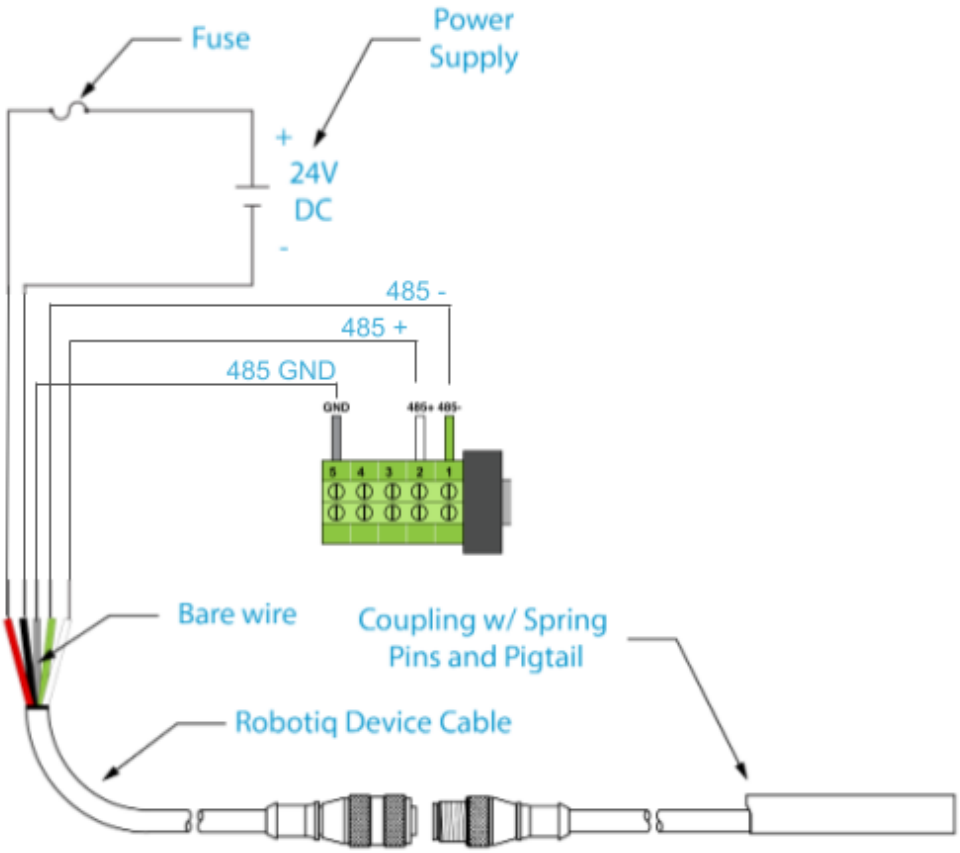

Fig. 3-10: Wiring diagram of Hand-E for robots requiring a RS485 adapter with S Series controllers.

Caution

Use proper cabling management. Make sure to leave enough slack in the cabling to allow movement of the gripper along all axes without pulling out the connectors. Always protect the controller side (robot side) connector of the cable with a strain relief cable clamp.

The figure below illustrates the Hand-E Gripper pigtail connector from the coupling (**GRP-CPL-062** or **AGC-CPL-XXX-002**), the device cable on the robot side (**CBL-COM-2065-10-HF**) and their associated pinout.

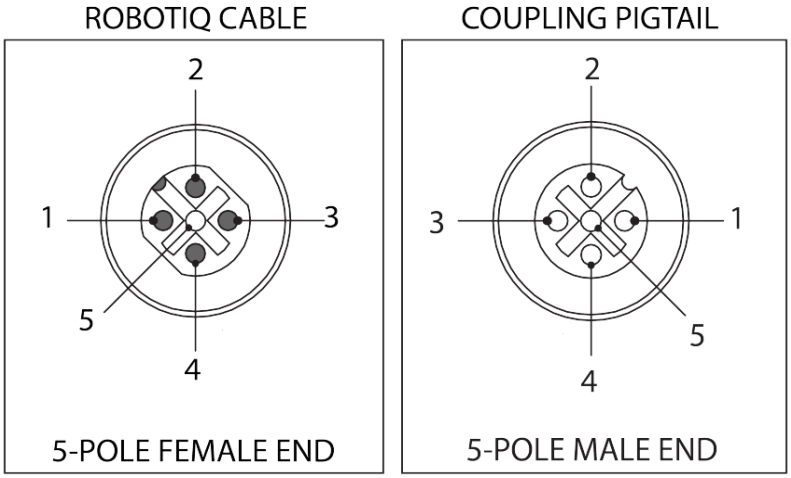

PIN	END OF CABLE COLOR	SIGNAL
1.	(SHIELD)	RS485 GND
2.	RED	24 V
3.	BLACK	GND
4.	WHITE	RS485 +
5.	GREEN	RS485 -

Single Gripper

Connect the white, green and bare wires to the Robotiq RS485 to RS232 signal converter (ACC-ADT-RS232-RS485) as shown in the figure below.

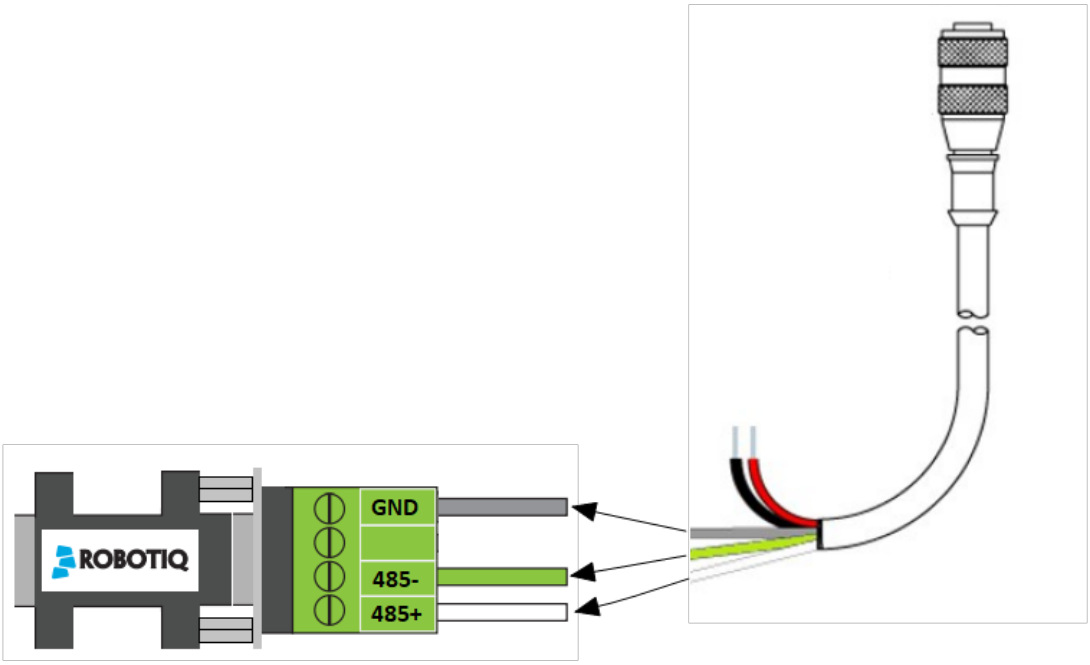

Fig. 3-11: Gripper Cable to RS485/RS232.

Use the RS485 adapter for S Series controllers.

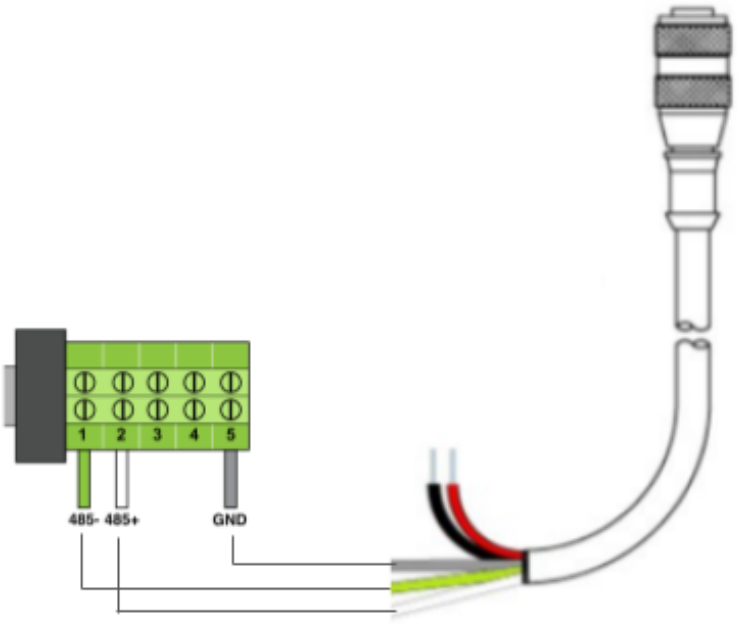

Fig. 3-12: Gripper cable to RS485.

Also connect the red (24V) and black (0V) wires in the controller according to the figure below.

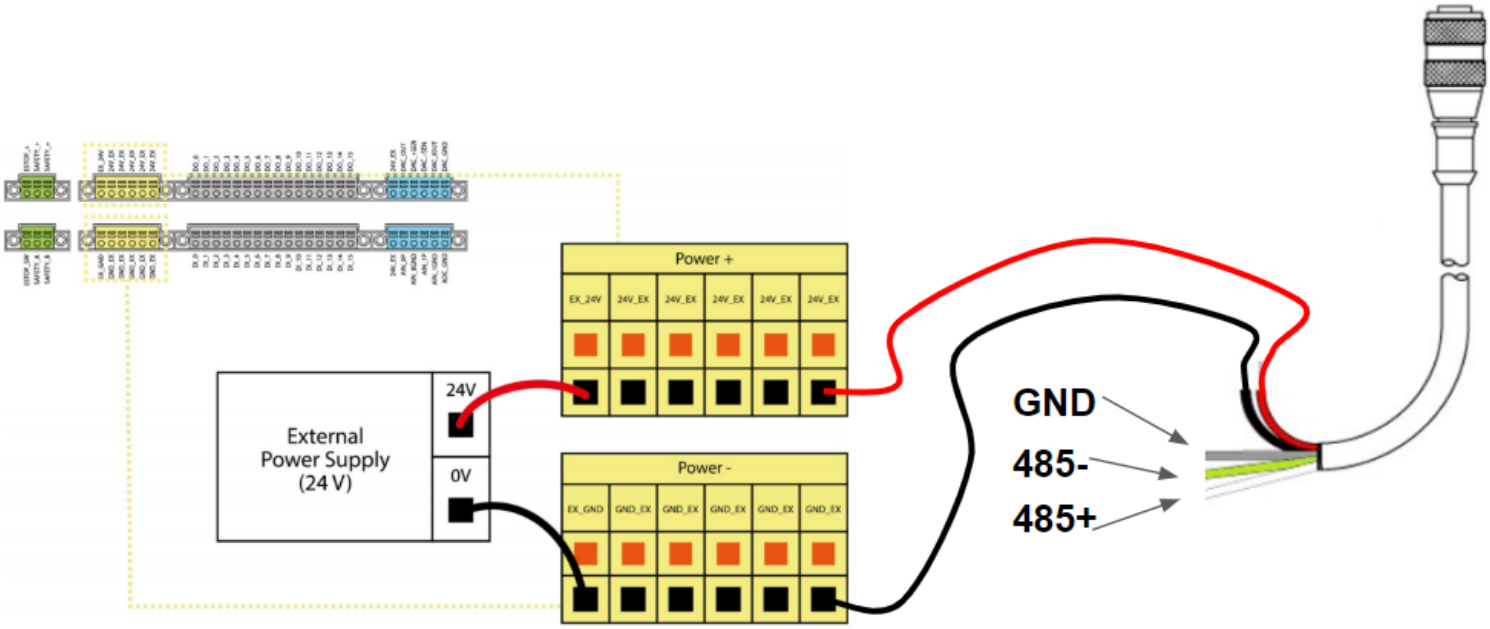

Fig. 3-13: Gripper Cable to Terminal Connector on the Controller

Multiple Grippers

It is possible to connect multiple grippers on the same robot. Only one RS485 to RS232 converter (ACC-ADT-RS232-RS485) should be used. Use 8 splitters (ACC-SPLIT-M12-2:1) to connect all the grippers pigtails to one 10 m cable (CBL-COM-2065-10-HF).

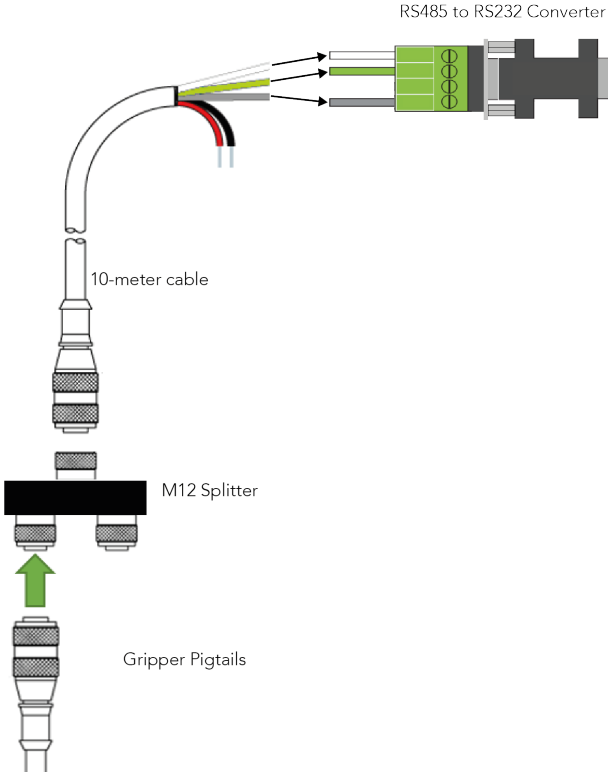

Fig. 3-14: Multiple grippers wiring

Use the RS485 adapter for S Series controllers.

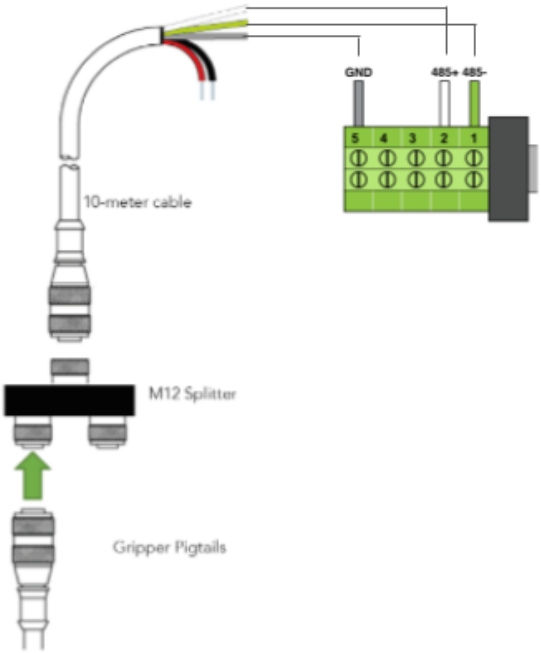

Fig. 3-15: Multiple gripper wiring using RS485 adapter for S Series controllers.

3.5.4. Coupling to Tool Connector for I/O Coupling

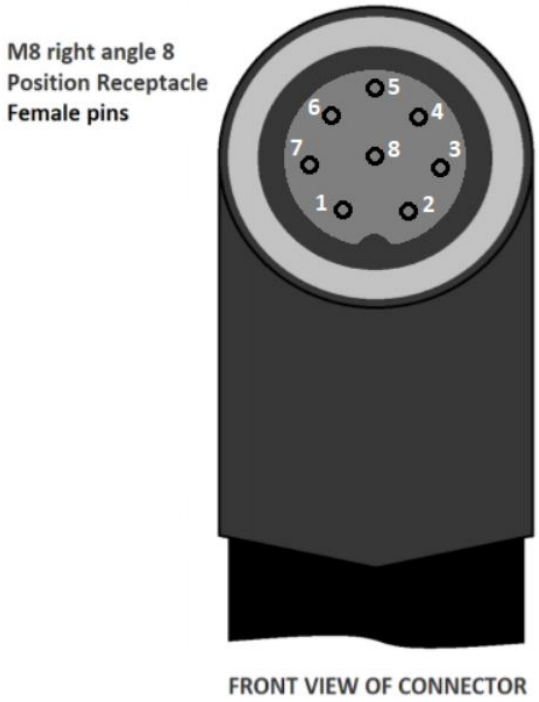

Pin #	Function
1	24V
2	Digital output 0
3	Digital output 1
4	Not connected
5	Digital input 0
6	Digital input 1
7	Not connected
8	0V

Fig. 3-16: Pinout of the I/O Coupling

4. Control

Info

Unless specified, all values in this section are in hexadecimal values.

4.1 Overview

The Robotiq Hand-E Gripper is controlled directly via Modbus RTU using a RS485 signal.

Tip

To test various gripper features such as object detection and force control, use the Robotiq User Interface. To download it, go to robotiq.com/support, click on **Select product > Hand-E Adaptive Gripper > [any robot brand] > Software > Robotiq User Interface > DOWNLOAD ZIP**.

Since the Robotiq Hand-E Gripper has its own embedded controller, you can use high-level commands such as "Go to requested position" to control it.

Info

The operator can control force, speed, and position of gripper fingers.

- Finger movement is always synchronized.
- Finger movement is initiated via a single "Go to requested position" command.
- Object detection is built-in. Operator is notified after an object is picked once the "Go to" command has been initiated.
- In case of emergency, auto-release is engaged (open or close).

Control using registers

Grippers share their internal memory with a robot controller. One part of the memory is for the robot output; **gripper functionalities**. The other part of the memory is for the robot input; **gripper status**. Two types of actions are then available to a robot controller:

1. Write in the **robot output** registers to activate **functionalities**;
2. Read in the **robot input** registers to get the **status** of the gripper.

The **Gripper Register Mapping** section maps the registers used to control the gripper or to read its status while the **Robot Output Registers & Functionalities** section details the output (write) register functions, and **Robot Input Registers and Status** section details the input (read) register status. The figure below is a representation of the memory and the control logic of the gripper. For details, see the **Control Logic Example** section

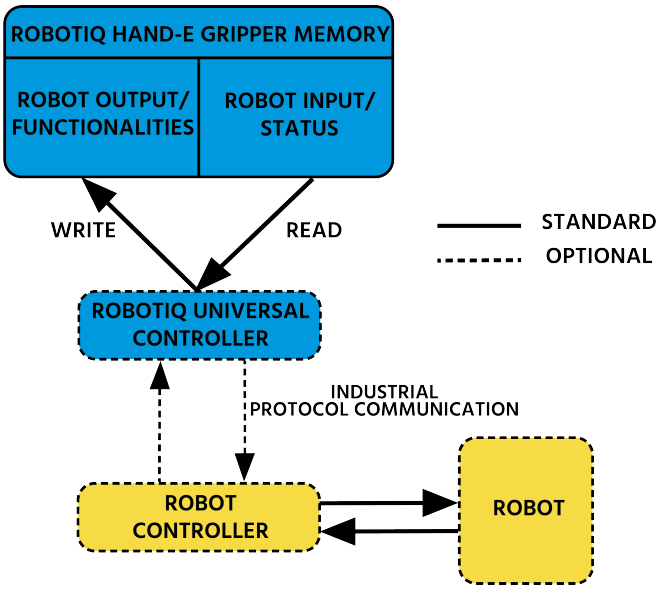

Fig. 4-1: Hand-E control logic overview

4.2. Gripper Register Mapping

Caution

Byte numbering starts at zero and not at 1 for the functionalities and status registers.

Register	Robot Output / Functionalities	Robot Input / Status
Byte 0	ACTION REQUEST	GRIPPER STATUS
Byte 1	RESERVED	RESERVED
Byte 2	RESERVED	FAULT STATUS
Byte 3	POSITION REQUEST	POS REQUEST ECHO
Byte 4	SPEED	POSITION
Byte 5	FORCE	CURRENT
Byte 6 to 15	RESERVED	RESERVED

Table 4-1: Registers of the Hand-E Gripper.

4.3. Robot Output Registers & Functionalities

4.3.1 Register: ACTION REQUEST

Address: **Byte 0**

Bits	7	6	5	4	3	2	1	0
Symbols	Reserved		rARD	rATR	rGTO	Reserved		rACT

rACT

First action to be made prior to any other actions; the **rACT** bit will activate the gripper. Clear the **rACT** bit to reset the gripper and clear any fault status.

- 0x0 - Deactivate Gripper.
- 0x1 - Activate Gripper (must stay on after activation routine is completed).

Warning

When setting **rACT** (rACT ==1), the gripper will begin movement to complete its activation feature.

Info

Power loss will set **rACT** (rACT == 1); the **rACT** bit must then be cleared (rACT == 0), then set again to allow operation of the gripper.

Caution

The **rACT** bit must stay on afterwards for any other action to be performed.

rGTO

The "Go To" action moves the gripper fingers to the requested position using the configuration defined by the other registers, **rGTO** will engage motion while bytes 3, 4 and 5 will determine aimed position, force and speed. The only motions performed without the **rGTO** bit are activation and automatic release routines.

- 0x0 - Stop.
- 0x1 - Go to requested position.

rATR

Automatic Release routine action slowly opens the gripper fingers until all motion axes reach their mechanical limits. After all motions are completed, the gripper sends a fault signal and needs to be reinitialized before any other motion is performed. The **rATR** bit overrides all other commands excluding the activation bit (**rACT**).

- 0x0 - Normal.
- 0x1 - Emergency auto-release.

> **Caution**
>
> The automatic release is meant to disengage the gripper after an emergency stop of the robot.
> The automatic release is not intended to be used under normal operating conditions.
> Automatic release requires the rACT to be cleared (rACT == 0) then set (rACT == 1).

rARD

Auto-release direction. When auto-releasing, **rARD** commands the direction of the movement. The **rARD** bit should be set prior to or at the same time as the **rATR** bit, as the motion direction is set when the auto-release is initiated.

- 0x0 - Closing auto-release
- 0x1 - Opening auto-release

4.3.2. Register: GRIPPER OPTIONS

Address: **Byte 1**

Bits	7	6	5	4	3	2	1	0
Symbol	Reserved							

4.3.3. Register: GRIPPER OPTIONS 2

Address: **Byte 2**

Bits	7	6	5	4	3	2	1	0
Symbol	Reserved							

4.3.4. Register: POSITION REQUEST

Address: **Byte 3**

Bits	7	6	5	4	3	2	1	0
Symbol	**rPR**							

This register is used to set the target position for the gripper's fingers. The positions 0x00 and 0xFF correspond respectively to the fully opened and fully closed mechanical stops. For detailed finger trajectory, see the **Specifications** section.

- 0x00 - Open position, with 50 mm opening
- 0xFF - Closed
- Opening / count: ≈0.2 mm for 50 mm stroke

> **Info**
>
> The activation will allow the gripper to adjust to any fingers/fingertips. No matter what is the size and/or shape of the fingers/fingertips, 0 will always be fully opened and 255 fully closed, with a quasi-linear relationship between the two values.

4.3.5. Register: SPEED

Address: **Byte 4**

Bits	7	6	5	4	3	2	1	0
Symbol	**rSP**							

This register is used to set the gripper closing or opening speed in real time, however, **setting a speed will not initiate a motion**.

- 0x00 - Minimum speed
- 0xFF - Maximum speed

4.3.6. Register: FORCE

Address: **Byte 5**

Bits	7	6	5	4	3	2	1	0
Symbol	**rFR**							

The force setting defines the final gripping force for the gripper. The force will fix the maximum current sent to the motor . If the current limit is exceeded, the fingers stop and trigger an object detection notification. Please refer to the **Picking Features** section for details on force control.

- 0x00 - Minimum force
- 0xFF - Maximum force

> **Info**
>
> Register bytes 6 to 15 are reserved and should be set to 0.

4.4. Robot Input Registers and Status

4.4.1. Register: GRIPPER STATUS

Address: **Byte 0**

Bits	7	6	5	4	3	2	1	0
Symbols	gOBJ		gSTA		gGTO	Reserved		gACT

gACT

Activation status, echo of the **rACT** bit (activation bit).

- 0x0 - Gripper reset.
- 0x1 - Gripper activation.

gGTO

Action status, echo of the **rGTO** bit (**go to** bit).

- 0x0 - Stopped (or performing activation / automatic release).
- 0x1 - Go to Position Request.

gSTA

Gripper status, returns the current status and motion of the gripper fingers.

- 0x00 - Gripper is in reset (or automatic release) state. See Fault Status if gripper is activated.
- 0x01 - Activation in progress.
- 0x02 - Not used.
- 0x03 - Activation is completed.

gOBJ

Object detection status, is a built-in feature that provides information on possible object pick-up. Ignore if **gGTO** == 0.

- 0x00 - Fingers are in motion towards requested position. No object detected.
- 0x01 - Fingers have stopped due to a contact while opening before requested position. Object detected opening.
- 0x02 - Fingers have stopped due to a contact while closing before requested position. Object detected closing.
- 0x03 - Fingers are at requested position. No object detected or object has been loss / dropped.

Caution

In some circumstances the object detection feature may not detect an object even if it is successfully grasped. For instance, picking up a thin object may be successful without the object detection status being triggered. In such applications, the " Fingers are at requested position" status of register gOBJ is sufficient to proceed to the next step of the routine.

Tip

Checking for the correct position of the fingers (byte 4), **as well as** object detection (byte 0, bit 6 & 7) before proceeding to the next step of a routine is a more reliable method than object detection or finger position alone.

4.4.2. Register: RESERVED

Address: **Byte 1**

Bits	7	6	5	4	3	2	1	0
Symbol	**Reserved**							

4.4.3. Register: FAULT STATUS

Address: **Byte 2**

Bits	7	6	5	4	3	2	1	0
Symbols	**kFLT**				**gFLT**			

gFLT

Fault status returns general error messages that are useful for troubleshooting. Fault LED (red) is present on the gripper chassis, LED can be blue, red or both and be solid or blinking.

- 0x00 - No fault (solid blue LED)
- Priority faults (solid blue LED)
  - 0x05 - Action delayed; the activation (re-activation) must be completed prior to perform the action.
  - 0x07 - The activation bit must be set prior to performing the action.

Minor faults (solid red LED)

- 0x08 - Maximum operating temperature exceeded (≥ 85 °C internally); let cool down (below 80 °C).
- 0x09 - No communication during at least 1 second.

Major faults (LED blinking red/blue) - Reset is required (rising edge on activation bit **(rACT)** needed).

- 0x0A - Under minimum operating voltage.
- 0x0B - Automatic release in progress.
- 0x0C - Internal fault, contact support@robotiq.com
- 0x0D - Activation fault, verify that no interference or other error occurred.
- 0x0E - Overcurrent triggered.
- 0x0F - Automatic release completed.

> **Info**
>
> While booting, status LED will be solid blue/red.

kFLT

See your optional controller manual (input registers and status).

4.4.4. Register: POSITION REQUEST ECHO

Address: **Byte 3**

Bits	7	6	5	4	3	2	1	0
Symbol	**gPR**							

gPR

Echo of the requested position for the gripper, value between 0x00 and 0xFF.

- 0x00 - Full opening.
- 0xFF - Full closing.

4.4.5. Register: POSITION

Address: **Byte 4**

Bits	7	6	5	4	3	2	1	0
Symbol	**gPO**							

gPO

Actual position of the gripper obtained via the encoders, value between 0x00 and 0xFF.

- 0x00 - Fully opened.
- 0xFF - Fully closed.

4.4.6. Register: CURRENT

Adress: **Byte 5**

Bits	7	6	5	4	3	2	1	0
Symbol	**gCU**							

gCU

The current is read instantaneously from the motor drive, value between 0x00 and 0xFF, approximate current equivalent is 10 * value read in mA.

> **Tip**
>
> Built-in features like object detection and force control use the fingers' electrical current readings. The user does not need to create these features.

4.5. Picking Features

As stated in previous sections, object picking is done via a simple "Go To" command, **rGTO** bit calls for movement, while **rPR** byte is the aimed position, **rSP** and **rFR** will be the desired speed and force settings respectively. This section describes key features in object picking applications:

- Force control
- Re-grasp
- Object detection
- Object contact loss

4.5.1 Force control

The gripping force is controlled via the **rFR** byte (please refer to the **Robot Output Registers & Functionalities** section).The gripper behavior will change according to the **rFR** force requested.

- **rFR** = 0 : Very fragile objects
  - Lowest force
  - Re-grasp feature is off
- 1 **rFR** 255 : Fragile to robust objects
  - Re-grasp feature is on

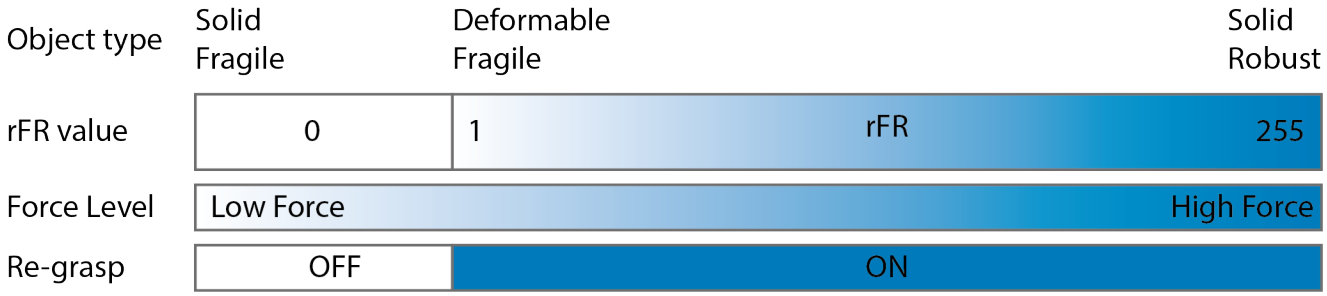

4.5.2. Re-Grasp

Re-grasp feature is a built-in feature meant to prevent object lost due to slipping or inaccurate initial grip. The Re-grasp feature allows the gripper to initiate movement when an object is slipping or dropped. When Re-grasping, the gripper will attempt to close until it reaches the position request (**rPR**).

- This feature is automatically set according to the force request **rFR**.

> **Info**
>
> Feature is off at force request rFR = 0, otherwise it is on.

- Re-grasp will keep the position setting:
  - Finger motion will stop when **rPR** position is reached, even if there is no object.

- Force and speed settings are not used, Re-grasp force and speed will automatically adjust to keep the object from being lost / dropped.

> **Info**
>
> While your initial settings for force and speed are not used for Re-grasp, they will never be exceeded to prevent damaging the part.

> **Caution**
>
> The rOBJ status is cleared when a motion is detected.

4.5.3. Object detection

When the gripper grabs an object, the **gOBJ** status will allow you to know if contact with the object was successful. This is a built-in feature for adaptive grippers meant to be used by the robot controller (or PLC) commanding the overall application. The Object detection feature will change the gOBJ status and can be used inside your robot program.

As stated in the previous section:

gOBJ: Only valid if **gGTO** = 1.

- 0x00 - Fingers are in motion towards requested position. No object detected.
- 0x01 - Fingers have stopped due to a contact while opening before requested position. Object detected.
- 0x02 - Fingers have stopped due to a contact while closing before requested position. Object detected.
- 0x03 - Fingers are at requested position. No object detected or object has been lost / dropped.

Example of contact detected with an object:

1. Set position, speed and force at maximum (full closing):
    a. **rPR** == 0xFF, **rSP** == 0xFF, **rFR** ==0xFF,
2. Set ''go to requested'' will initiate movement :
    a. **rGTO** == 0x01
3. Then object detection status will be " in motion"
    a. **gOBJ** == 0x00
4. Until an object is picked, object detection status will then be " stopped due to contact while closing"
    a. **gOBJ** == 0x02
5. The user can now assume it is holding the payload, and proceed to the next step.

Example of contact lost with an object:

1. From the previous example, after an object is picked
    a. **gOBJ** == 0x02
2. If the gOBJ status displays 0x03 after it was 0x02, user can assume contact with the object has been lost.

4.5.4. Brake engagement

Hand-E is equipped with a brake that engages at the end of every gripper move, and disengages between moves. For instance, when fully closing on an object, the gripper touches the object, activates the brake, and sends the object detection signal to the robot.

4.6. Control Logic Example

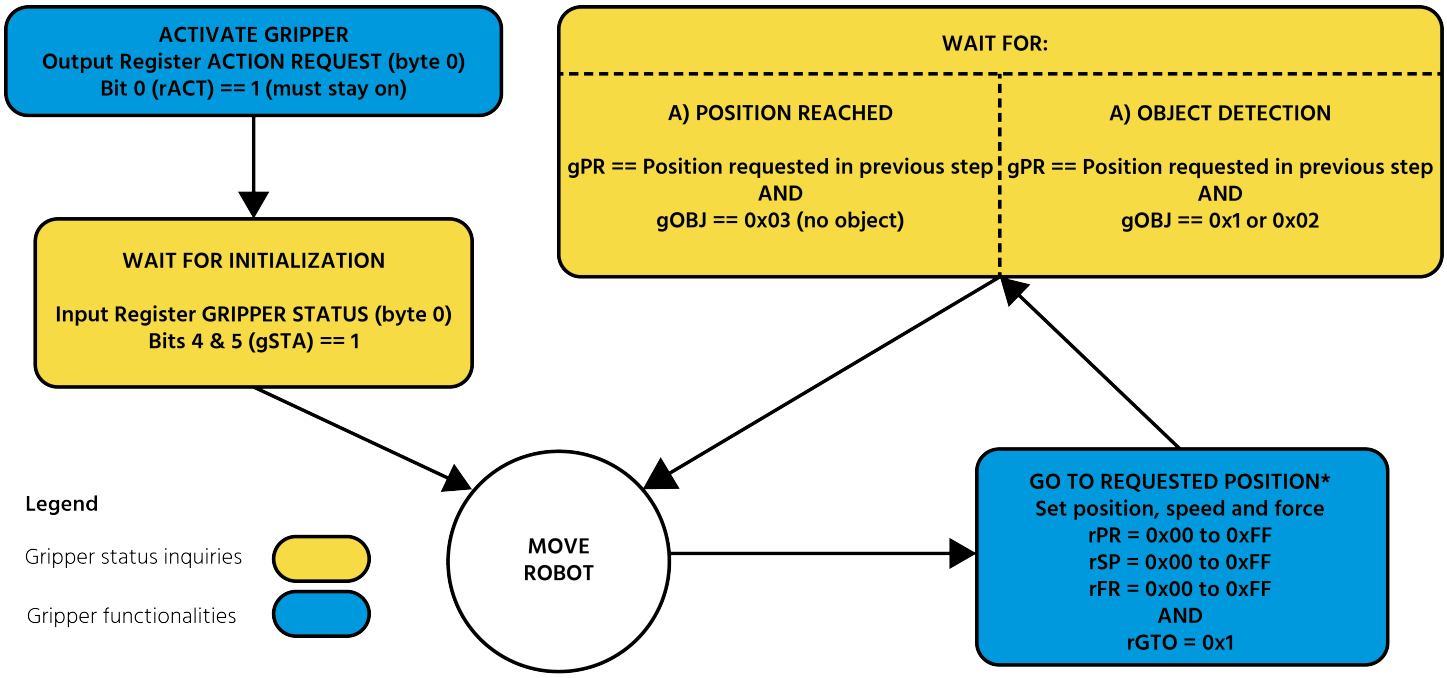

Go to requested position is used to open/close the Gripper until a contact with the object is detected, or the requested position is reached.

Fig. 4-2: Example of Gripper control logic with corresponding registers.

4.7. Modbus RTU Communication

The gripper can be controlled by Modbus RTU directly with RS485 -RS232 using the ACC-ADT-RS232-RS485, or over USB using the ACC-ADT-USB-RS485. This section is intended to provide guidelines for setting up a Modbus master that will adequately communicate with the gripper.

For a general introduction to Modbus RTU and for details regarding the CRC algorithm, the reader is invited to read the Modbus over serial line specification and implementation guide available at: http://www.modbus.org/docs/Modbus_over_serial_line_V1_02.pdf.

For debugging purposes, the reader is also invited to download one of many free Modbus scanners such as the *CAS Modbus Scanner from Chipkin Automation Systems* available at: http://www.store.chipkin.com/products/tools/cas-modbus-scanner.

Info

Modbus RTU is a communication protocol based on a Big Endian byte order. Therefore, the 16-bit register addresses are transmitted with the most significant byte first. However, the data port is in the case of Robotiq products based on the Little Endian byte order. As such, the data parts of Modbus RTU messages are sent with the less significant byte first.

Tip

Modbus RTU specifications and details can be found at www.modbus.org.

4.7.1 Connection Setup

The following table describes the connection requirements for controlling the gripper using the Modbus RTU protocol.

PROPRIETY	DEFAULT VALUE
Physical Interface	RS-485[1]
Baud Rate[2]	115,200 bps
Data Bits	8
Stop Bit[2]	1
Parity[2]	None
Supported Functions	Read Input Registers (FC04) Preset Multiple Registers (FC16) Master read & write multiple registers (FC23)
Exception Responses	Not supported
Slave ID[2]	0x0009 (9)
Robot Output / Gripper Input First Register	0x03E8 (1000)
Robot Input / Gripper Output First Register	0x07D0 (2000)
Termination Resistor[2]	120 ohms

[1] Various converters are available in the **Spare Parts, Kits and Accessories** section.

[2] These parameters can be adjusted using the Robotiq User Interface.

Each register (word - 16 bits) of the Modbus RTU protocol is composed of **2** bytes (8 bits) from the gripper. The first gripper output Modbus register(0x07D0) is composed from the first **2** Robotiq Gripper bytes (byte 0 and byte 1).

Info

200 Hz is the maximum speed when commanding / reading from the Robotiq Gripper. It is therefore recommended to send commands with a minimum delay of 5 ms between them.

Info

Maximum baud rate of **ACC-ADT-USB-RS485** is 115200 bps.

120 Ohms termination resistor is already present on the converter and the Gripper. If multiple grippers are connected in parallel on the same RS485 cable, termination resistor must be set to OFF in communication parameters.

4.7.2. Read input registers (FC04)

Function code 04 (FC04) is used for requesting the status of the gripper analog input register. Examples of such data are gripper status, object status, finger position, etc.

Example of an FC04 read function:

This message asks for register 0x07D0 (2000) and register 0x07D1 (2001) which contains Gripper Status, Object Detection, Fault Status and Position Request Echo.

Request is: 09 04 07 D0 00 02 70 0E

Bits	Description
09	SlaveID
04	Function Code 04 (Read Input Registers)
07D0	Address of the first requested register
0002	Number of registers requested (2)
700E	Cyclic Redundancy Check (CRC)

Response is: 09 04 04 E0 00 00 00 45 84

Bits	Description
09	SlaveID
04	Function Code 04 (Read Input Registers)
04	Number of data bytes to follow (2 registers x 2 bytes/register = 4 bytes)
E000	Content of register 07D0
0000	Content of register 07D1
4584	Cyclic Redundancy Check (CRC)

4.7.3. Preset multiple registers (FC16)

Function code 16 (FC16) is used to activate functionalities of the gripper (robot output). Examples of such data are action request, speed, force, etc.

Example of setting multiple registers FC16:

This message requests to set position request, speed and force of the gripper by setting register 0x03E9 (1002) and 0x03EA.

Request is: 09 10 03 E9 00 02 04 60 E6 3C C8 EC 7C

Bits	Description
09	SlaveID
10	Function Code 16 (Preset Multiple Registers)
03E9	Address of the first register
0002	Number of registers written to
04	Number of data bytes to follow (2 registers x 2 bytes/register = 4 bytes)
60E6	Value written to register 0x03E9
3CC8	Value written to register 0x03EA
EC7C	Cyclic Redundancy Check (CRC)

Response is: 09 10 03 E9 00 02 91 30

Bits	Description
09	SlaveID
10	Function Code 16 (Preset Multiple Registers)
03E9	Address of the first register
0002	Number of written registers
9130	Cyclic Redundancy Check (CRC)

4.7.4. Master read and write multiple registers FC23

Function code 23 (FC23) is used for reading the status of the gripper (robot input) and activating gripper functionalities (robot output) simultaneously. Examples of such data are gripper status, object status, finger position, etc. Action requests are speed, force, etc.

Example of reading and writing multiple registers FC23:

This message reads registers 0x07D0 (2000) and 0x07D1 (2001), which contains Gripper Status, Object Detection, Fault Status and Position Request Echo. It also sets the position request, speed and force of the gripper by writing to registers 0x03E9 (1001) and 0x03EA (1002).

Request is: 09 17 07 D0 00 02 03 E9 00 02 04 00 E6 3C C8 2D 0C

Bits	Description
09	SlaveID
17	Function Code 23 (read and write multiple registers)
07D0	Address of the first requested register, **read**
0002	Number of registers requested (2), **read**
03E9	Address of the first register **written to**
0002	Number of registers **written** to (2)
04	Number of data bytes to follow (2 registers X 2 bytes/registers = 4 bytes)
00E6	Value written to register 0x03E9
3CC8	Value written to register 0x03EA
2D0C	Cyclic Redundancy Check (CRC)

Response is: 09 17 04 01 00 09 E6 F6 C1

Bits	Description
09	SlaveID
17	Function Code 23 (read and write multiple registers)
04	Number of data bytes to follow (2 registers x 2 bytes/register = 4 bytes)
1000	Content of register 07D0
09E6	Content of register 07D1
F6C1	Cyclic Redundancy Check (CRC)

Tip

Response contents might change depending on gripper status.

Info

Gripper executes the input command ("write" command), executes one cycle of motion, updates the output, then returns the Modbus response read.

4.7.5. Modbus RTU example

This section depicts the example from the **Control Logic Example** section, when programmed using the Modbus RTU protocol. The example is typical of a pick and place application. After activating the gripper, the robot is moved to a pick-up location to grip an object. It moves again to a second location to release the gripped object.

Step 1: Activation Request (clear and set rACT)

Request is (clear rAct): 09 10 03 E8 00 03 06 00 00 00 00 00 00 73 30

Bits	Description
09	SlaveID
10	Function Code 16 (Preset Multiple Registers)
03E8	Address of the first register
0003	Number of registers written to
06	Number of data bytes to follow (3 registers x 2 bytes/register = 6 bytes)
0000	Value to write to register 0x03E9 (ACTION REQUEST = 0x01 and GRIPPER OPTIONS = 0x00): **rACT = 1 for "Activate Gripper"**
0000	Value written to register 0x03EA
0000	Value written to register 0x03EB
7330	Cyclic Redundancy Check (CRC)

Response is: 09 10 03 E8 00 03 01 30

Bits	Description
09	SlaveID
10	Function Code 16 (Preset Multiple Registers)
03E8	Address of the first register
0003	Number of written registers
0130	Cyclic Redundancy Check (CRC)

Request is (set rAct): 09 10 03 E8 00 03 06 01 00 00 00 00 00 72 E1

Bits	Description
09	SlaveID
10	Function Code 16 (Preset Multiple Registers)
03E8	Address of the first register
0003	Number of registers written to
06	Number of data bytes to follow (3 registers x 2 bytes/register = 6 bytes)
0100	Value to write to register 0x03E9 (ACTION REQUEST = 0x01 and GRIPPER OPTIONS = 0x00): **rACT = 1 for "Activate Gripper"**
0000	Value written to register 0x03EA
0000	Value written to register 0x03EB
72E1	Cyclic Redundancy Check (CRC)

Response is: 09 10 03 E8 00 03 01 30

Bits	Description
09	SlaveID
10	Function Code 16 (Preset Multiple Registers)
03E8	Address of the first register
0003	Number of written registers
0130	Cyclic Redundancy Check (CRC)

Step 2: Read Gripper status until the activation is completed

Request is: 09 04 07 D0 00 01 30 0F

Bits	Description
09	SlaveID
04	Function Code 04 (Read Input Registers)
07D0	Address of the first requested register
0001	Number of registers requested (1)
300F	Cyclic Redundancy Check (CRC)

Response (if the activation IS NOT completed): 09 04 02 11 00 54 A1

Bits	Description
09	SlaveID
04	Function Code 04 (Read Input Registers)
02	Number of data bytes to follow (1 register x 2 bytes/register = 2 bytes)
1100	Content of register 07D0 (GRIPPER STATUS = 0x11, RESERVED = 0x00): gACT = 1 for " Gripper Activation**", gSTA = 1 for "Activation in progress"**
54A1	Cyclic Redundancy Check (CRC)

Response (if the activation IS completed): 09 04 02 31 00 4D 61

Bits	Description
09	SlaveID
04	Function Code 04 (Read Input Registers)
02	Number of data bytes to follow (1 register x 2 bytes/register = 2 bytes)
3100	Content of register 07D0 (GRIPPER STATUS = 0x31, RESERVED = 0x00): gACT = 1 for " Gripper Activation**", gSTA = 3 for "Activation is completed"**
4D61	Cyclic Redundancy Check (CRC)

Step 3: Move the robot to the pick-up location

Step 4: Close gripper at full speed and full force

Request is: 09 10 03 E8 00 03 06 09 00 00 FF FF FF 42 29

Bits	Description
09	SlaveID
10	Function Code 16 (Preset Multiple Registers)
03E8	Address of the first register
0003	Number of registers written to
06	Number of data bytes to follow (3 registers x 2 bytes/register = 6 bytes)
0900	Value written to register 0x03E8 (ACTION REQUEST = 0x09 and GRIPPER OPTIONS = 0x00): **rACT = 1 for "Activate Gripper", rGTO = 1 for "Go to Requested Position"**
00FF	Value written to register 0x03E9 (GRIPPER OPTIONS 2 = 0x00 and POSITION REQUEST = 0xFF): **rPR = 255/255 for full closing of the Gripper**
FFFF	Value written to register 0x03EA (SPEED = 0xFF and FORCE = 0xFF): full speed and full force
4229	Cyclic Redundancy Check (CRC)

Response is: 09 10 03 E8 00 03 01 30

Bits	Description
09	SlaveID
10	Function Code 16 (Preset Multiple Registers)
03E8	Address of the first register
0003	Number of written registers
0130	Cyclic Redundancy Check (CRC)

Step 5: Read Gripper status until the grip is completed

Request is: 09 04 07 D0 00 03 B1 CE

Bits	Description
09	SlaveID
04	Function Code 04 (Read Input Registers)
07D0	Address of the first requested register
0003	Number of registers requested (3)
B1CE	Cyclic Redundancy Check (CRC)

Example of response if the grip **is not completed**: 09 04 06 39 00 00 FF 0E 0A B6 6D

Bits	Description
09	SlaveID
04	Function Code 04 (Read Input Registers)
06	Number of data bytes to follow (3 registers x 2 bytes/register = 6 bytes)
3900	Content of register 07D0 (GRIPPER STATUS = 0x39, RESERVED = 0x00): gACT = 1 for "Gripper Activation", gGTO = 1 for "Go to Position Request" and **gOBJ = 0 for "Fingers are in motion"**
00FF	Content of register 07D1 (FAULT STATUS = 0x00, POSITION REQUEST ECHO = 0xFF): the position request echo tells that the command was well received and that the GRIPPER STATUS is valid.
0E0A	Content of register 07D2 (POSITION = 0x0E, FINGER CURRENT = 0x0A): the position is 14/255 and the motor current is 100mA (these values will change during motion)
B66D	Cyclic Redundancy Check (CRC)

Example of response if the grip **is completed**: 09 04 06 B9 00 00 FF BD 00 5C 9A

Bits	Description
09	SlaveID
04	Function Code 04 (Read Input Registers)
06	Number of data bytes to follow (3 registers x 2 bytes/register = 6 bytes)
B900	Content of register 07D0 (GRIPPER STATUS = 0xB9, RESERVED = 0x00): gACT = 1 for "Gripper Activation", gGTO = 1 for "Go to Position Request" and **gOBJ = 2 for "Fingers have stopped due to a contact while closing"**
00FF	Content of register 07D1 (FAULT STATUS = 0x00, POSITION REQUEST ECHO = 0xFF): the position request echo tells that the command was well received and that the GRIPPER STATUS is valid.
BD00	Content of register 07D2 (POSITION = 0xBD, FINGER CURRENT = 0x00): the position is 189/255 (can be used to validate the size of the seized object)
5C9A	Cyclic Redundancy Check (CRC)

Step 6: Move gripper to release location

Step 7: Open the Gripper at full speed and full force

Request is: 09 10 03 E8 00 03 06 09 00 00 00 FF FF 72 19

Bits	Description
09	SlaveID
10	Function Code 16 (Preset Multiple Registers)
03E8	Address of the first register
0003	Number of registers written to
06	Number of data bytes to follow (3 registers x 2 bytes/register = 6 bytes)
0900	Value written to register 0x03E8 (ACTION REQUEST = 0x09 and GRIPPER OPTIONS = 0x00): **rACT = 1 for "Activate Gripper", rGTO = 1 for "Go to Requested Position"**
0000	Value written to register 0x03E9 (GRIPPER OPTIONS 2 = 0x00 and POSITION REQUEST = 0x00): **rPR = 0/255 for full opening of the Gripper (partial opening would also be possible)**
FFFF	Value written to register 0x03EA (SPEED = 0xFF and FORCE = 0xFF): full speed and full force
7219	Cyclic Redundancy Check (CRC)

Response is: 09 10 03 E8 00 03 01 30

Bits	Description
09	SlaveID
10	Function Code 16 (Preset Multiple Registers)
03E8	Address of the first register
0003	Number of written registers
0130	Cyclic Redundancy Check (CRC)

Step 8: Read Gripper status until the opening is completed

Request is: 09 04 07 D0 00 03 B1 CE

Bits	Description
09	SlaveID
04	Function Code 04 (Read Input Registers)
07D0	Address of the first requested register
0003	Number of registers requested (3)
B1CE	Cyclic Redundancy Check (CRC)

Example of response if the opening **is not completed**: 09 04 06 39 00 00 00 BB 10 71 06

Bits	Description
09	SlaveID
04	Function Code 04 (Read Input Registers)
06	Number of data bytes to follow (3 registers x 2 bytes/register = 6 bytes)
3900	Content of register 07D0 (GRIPPER STATUS = 0x39, RESERVED = 0x00): gACT = 1 for "Gripper Activation", gGTO = 1 for "Go to Position Request" and **gOBJ = 0 for "Fingers are in motion"**
0000	Content of register 07D1 (FAULT STATUS = 0x00, POSITION REQUEST ECHO = 0x00): the position request echo tells that the command was well received and that the GRIPPER STATUS is valid.
BB10	Content of register 07D2 (POSITION = 0xBB, FINGER CURRENT = 0x10): the position is 187/255 and the motor current is 160mA (these values will change during motion)
7106	Cyclic Redundancy Check (CRC)

Example of response if the opening **is completed**: 09 04 06 F9 00 00 00 0D 00 17 AA

Bits	Description
09	SlaveID
04	Function Code 04 (Read Input Registers)
06	Number of data bytes to follow (3 registers x 2 bytes/register = 6 bytes)
F900	Content of register 07D0 (GRIPPER STATUS = 0xF9, RESERVED = 0x00): gACT = 1 for "Gripper Activation", gGTO = 1 for "Go to Position Request" and **gOBJ = 3 for "Fingers are at requested position"**
0000	Content of register 07D1 (FAULT STATUS = 0x00, POSITION REQUEST ECHO = 0x00): the position request echo tells that the command was well received and that the GRIPPER STATUS is valid.
0D00	Content of register 07D2 (POSITION = 0x0D, FINGER CURRENT = 0x00): the position is 13/255 (the fingers have reached their software limit)
17AA	Cyclic Redundancy Check (CRC)

Step 9: To grip additional objects, loop from step 3.

4.8. Hand-E Gripper and I/O Coupling communication

The following communication parameters must be present:

- **Baud rate**: 115200 bps
- **Parity**: None
- **Data**: 8 bit
- **Stop bit**: 1 bit
- **Slave ID**: 1 to 9

Activation sequence

In order to activate the sequence:

- Wait at least 10 ms between steps
- The whole sequence can not exceed 5 seconds
- The gripper must be connected to the I/O Coupling. The I/O Coupling detection of the gripper has to be confirmed (led blue) before doing the sequence, otherwise it will not be valid.
- Doing the sequence once the I/O coupling is activated will reactivate the I/O Coupling.
- Activating the I/O Coupling triggers the activation sequence of the gripper.
- Activation of the I/O Coupling must be done each time you connect a new device or when a power cycle is done so you can use the connected device, otherwise it will do nothing.

Steps (> 10 ms between)	Digital Input 0	Digital Input 1
1	Low	Low
2	High	-
3	Low	-
4	-	High
5	-	Low

4.9. Control over TM

4.9.1. Control with the Techman Robots Wrist Connection Kit

TM Components for the I/O Coupling with the Hand-E Gripper

Component Icon	Component node	TM Components	Functions
WRIST_V001	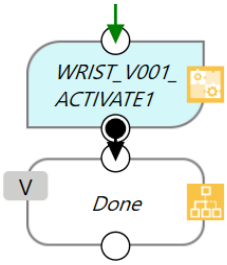	**Activate component**	• To activate the gripper and the I/O Coupling. • It must be used only one time before using the presets.
WRIST_V001	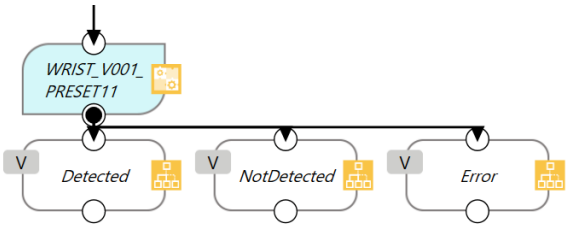	**Preset X**	• To use the preset X and move the gripper.

All the presets come with three (3) exit nodes:

1. **Detected:** The gripper stopped before reaching its position and has detected an object.
2. **NotDetected**: The gripper reached its position and did not detect an object.
3. **Error**: A communication error has occurred.

4.9.2. TM Robots Compatibility with Robotiq Grippers

Hardware Version	TM Flow Version	TM Gripper Component	Robotiq RS232 Converter
HW1, HW2, HW3	1.68 and later	ADG_V001_XXX	Compatible

4.9.3. Getting Started

1. Power ON the robot.
2. Click the triple bar icon in the upper left corner of the screen.

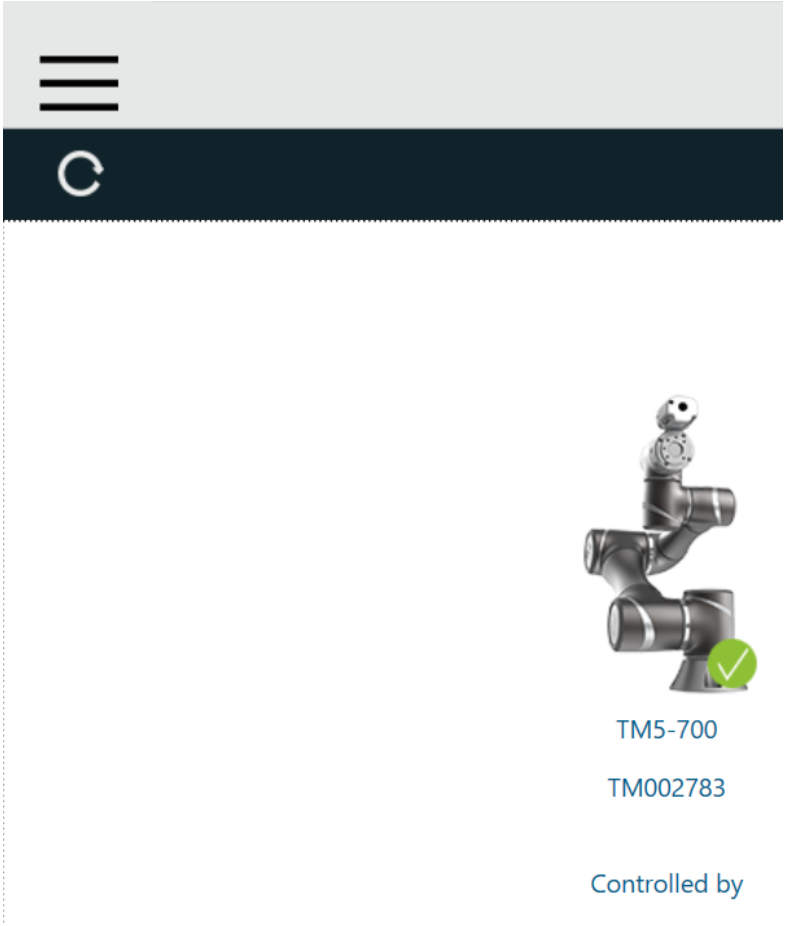

3 Click **Login** in the left navigation pane.

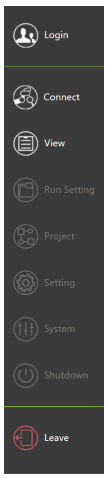

4 Enter your credentials, then click **OK**.

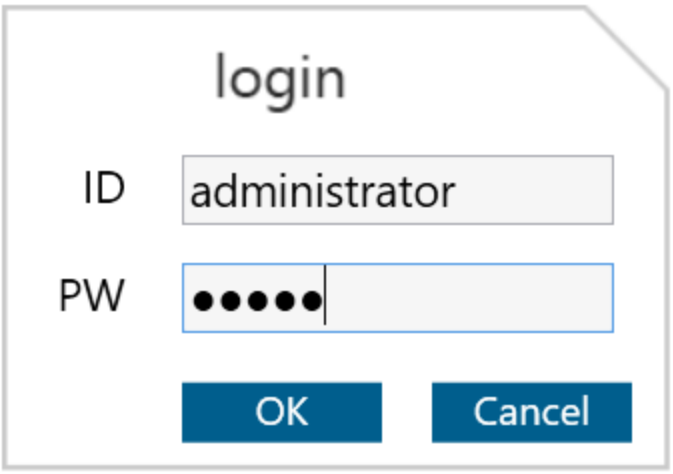

5 Click on **Get Control**

6 Click on the **triple bar icon** in the upper left corner, then select **Project**.

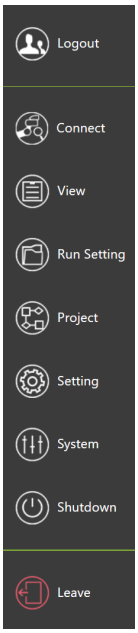

7 Click **New Project** in the upper left corner.

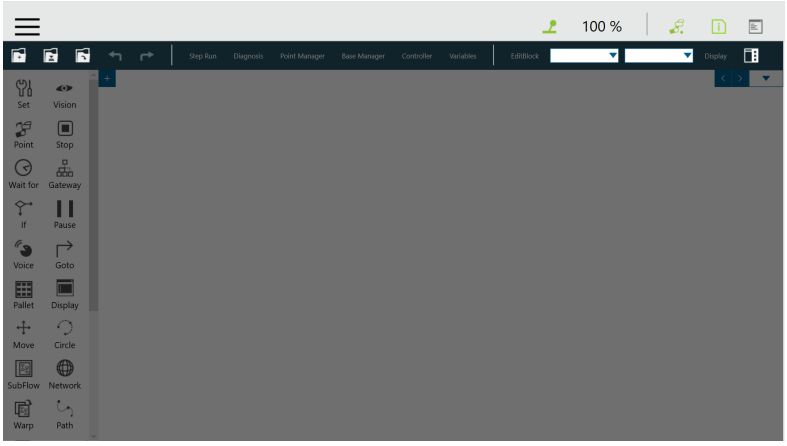

8 Enter a name for your program, then click **OK**. In the image below, it is called " Pick_And_Place" .

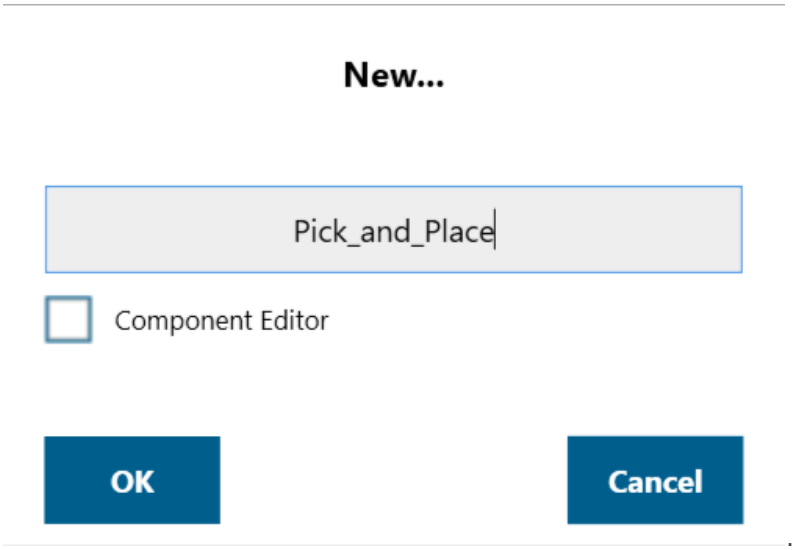

4.9.4. TM Gripper Components GRIPPER_ROBOTIQ_ADG_V001_CHANGEGRIPPER.Component

Here is the list of the current Robotiq adaptive grippers (i.e. "ADG") TM Components to install on TM Robots:

- GRIPPER_ROBOTIQ_ADG_V001_SET.Component = SET the Gripper (Speed, Force, Position)
- GRIPPER_ROBOTIQ_ADG_V001_CLOSE.Component = CLOSE the Gripper (Action)
- GRIPPER_ROBOTIQ_ADG_V001_OPEN.Component = OPEN the Gripper (Action)
- GRIPPER_ROBOTIQ_ADG_V001_CHANGEGRIPPER.Component = CHANGE the address of the Gripper/dual Gripper

Installation

1. Download the TM Series Component package. Go to robotiq.com/support, click **Select product > Hand-E Adaptive Gripper > Techman Robot > Software > Gripper Software > DOWNLOAD ZIP.**
2. Unzip the file at the root of a blank USB stick.
3. Rename the USB stick to "TMROBOT".

> **Caution**
>
> The USB stick must be named "TMROBOT", or it will not be supported by the robot.

4. Insert the USB stick in the robot controller.
5. In TM Flow (robot software), click the triple bar icon, then select **System**.

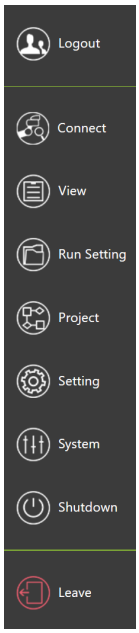

6 The "System Setting" window is displayed. Click **Import/Export**.

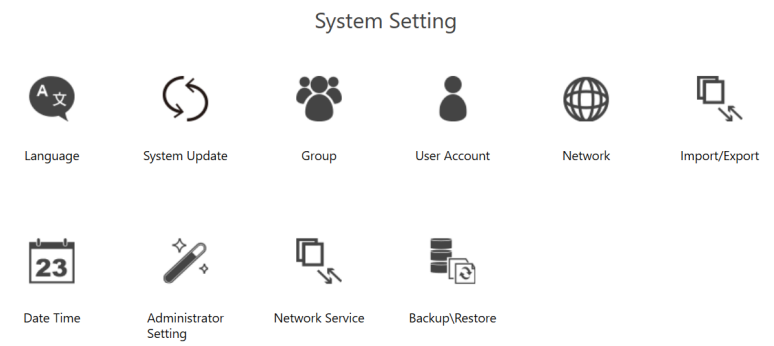

7 The Import/Export main window is displayed. Select the **Import** tab.

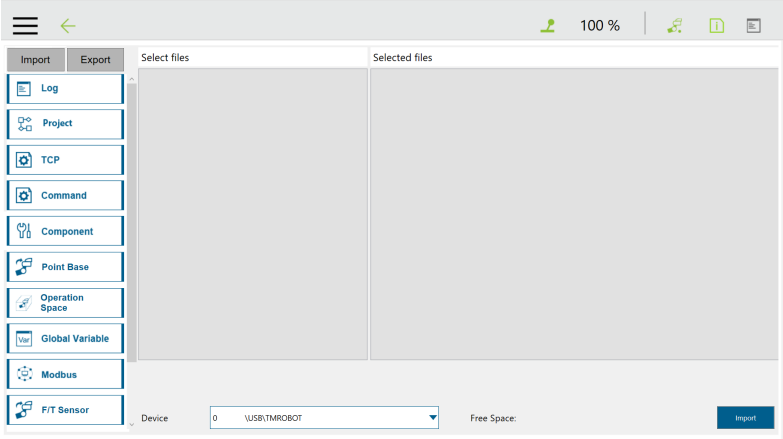

8 The "Robot List" window is displayed. Select **TMComponents**, then **OK**.

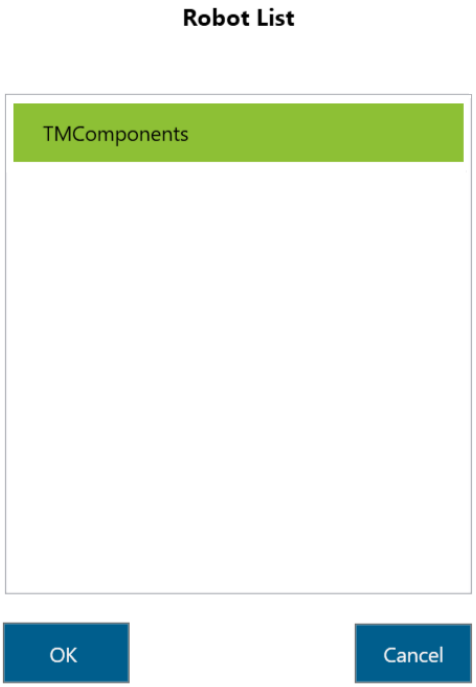

9 From the Import/Export window, select the **Import** tab, then **Component**. Check the box of each component you want to import. It is moved under the "Selected files" list.

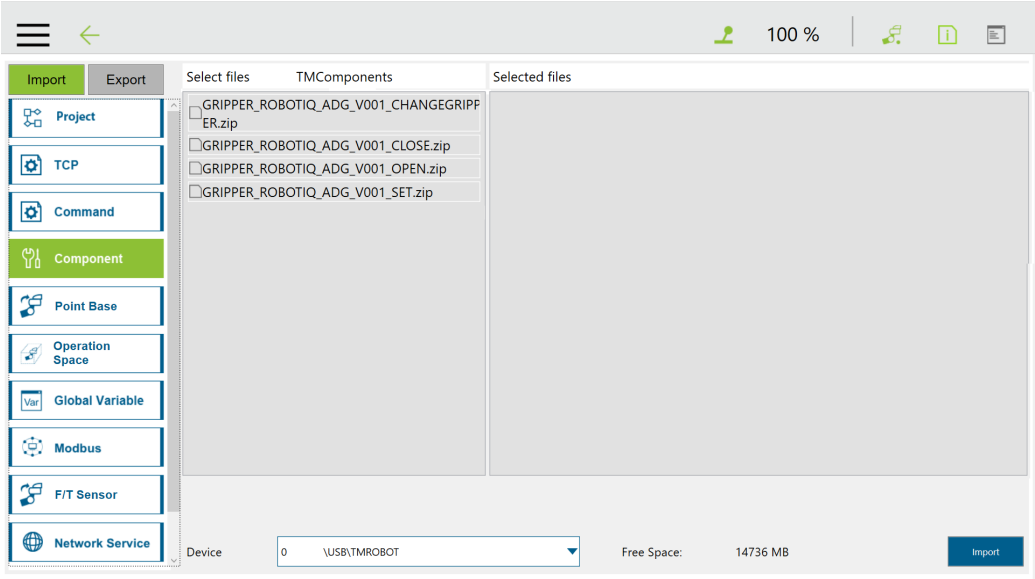

10 Move all required components to the " Selected files" window, and click the **Import** button in the bottom right corner.

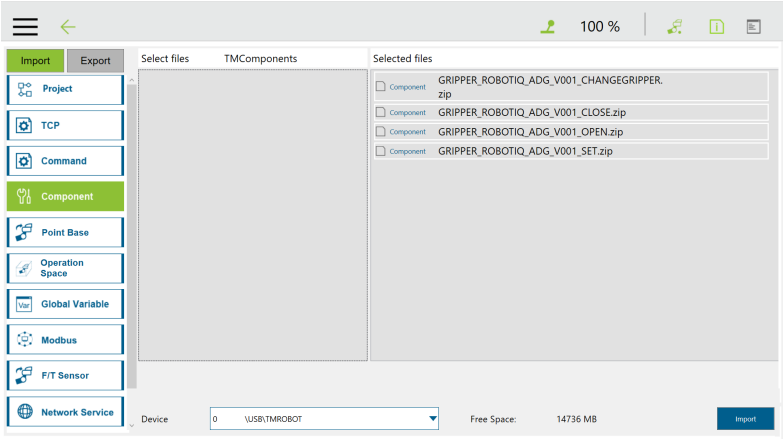

11 A confirmation message is displayed.

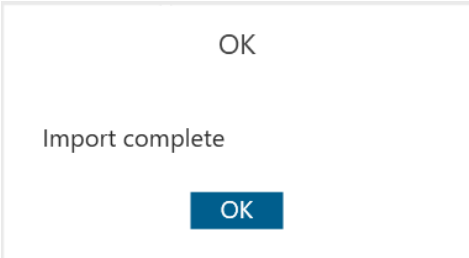

12 Click the **triple bar icon**, and select **Setting**.

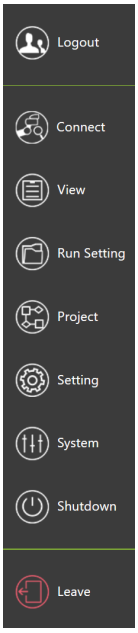

13 The **Robot Setting** window is displayed. Click **Component**.

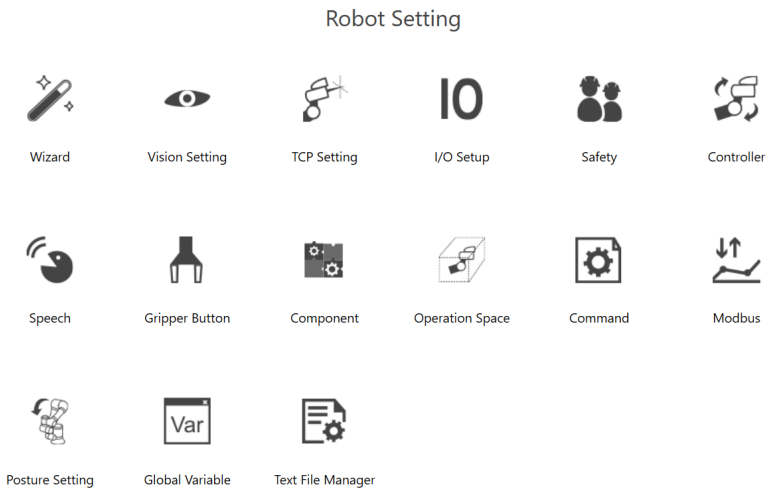

14 The "Component List" window is displayed. To enable a component from the list, select its corresponding radio button.

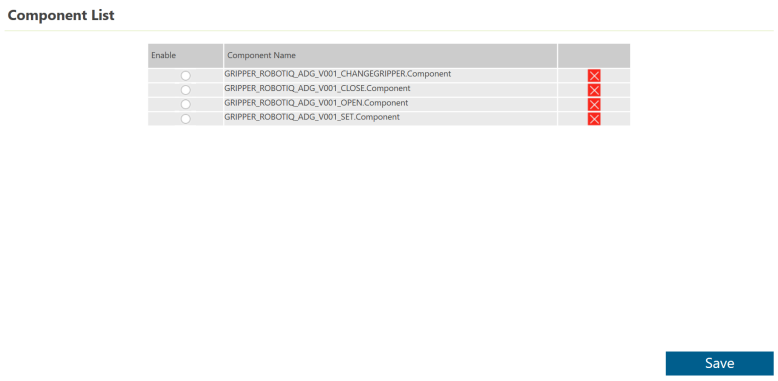

15 The corresponding Component radio button turns green when a Component is enabled. After you enable all required Components, click **Save**.

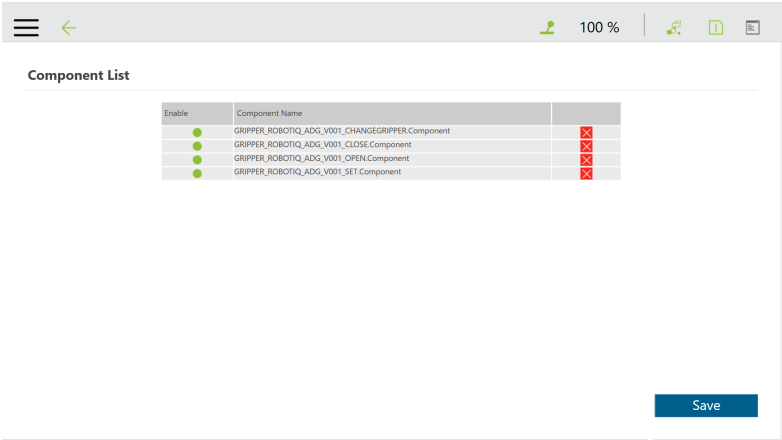

16 Create a new project or open an existing project, and locate the Gripper components in the navigation pane

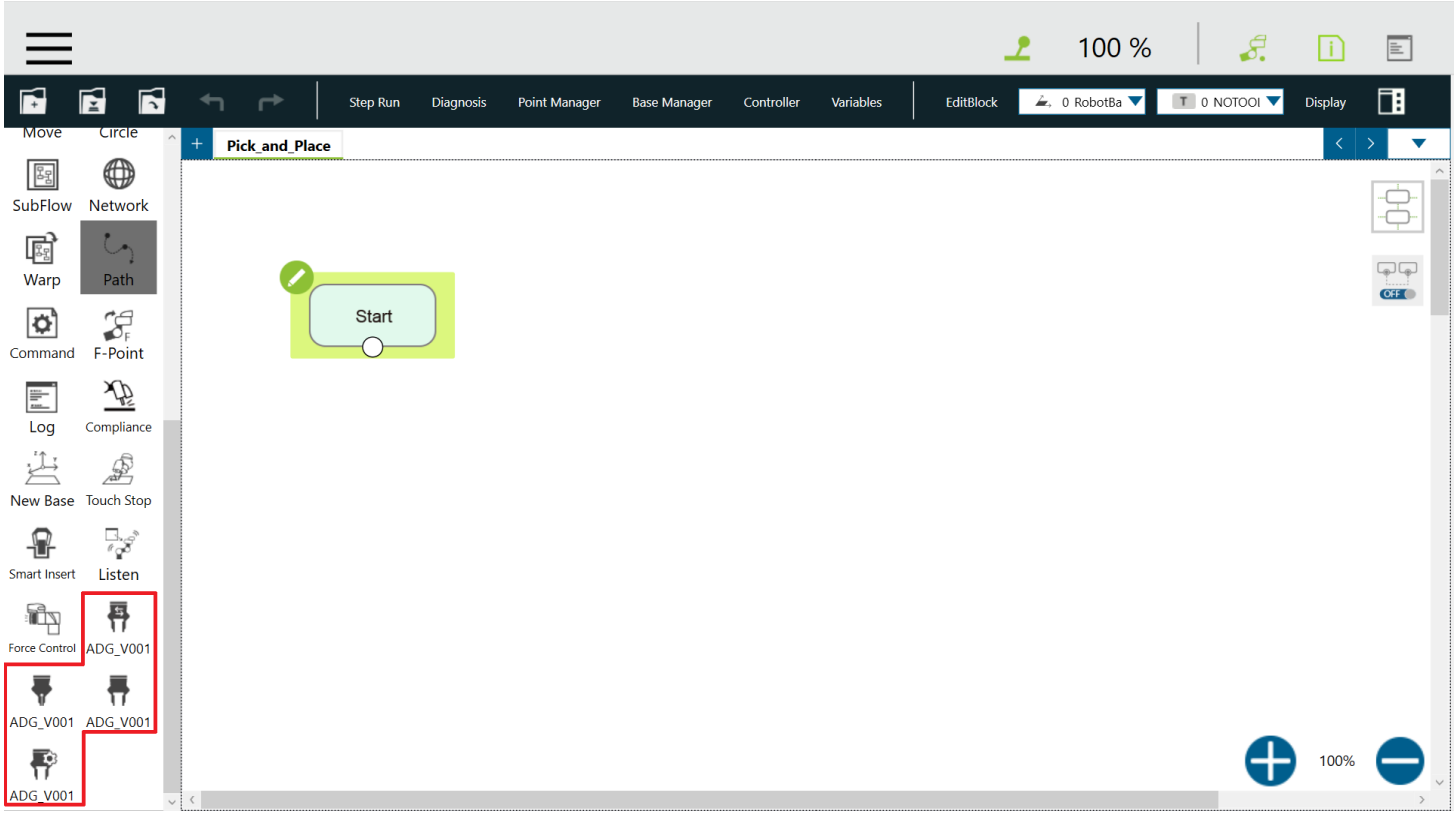

Gripper Button

The user can assign Gripper Components to the gripper button and use the latter to open and close the fingers of the Robotiq Gripper.

1 From the TM Flow homepage, tap the **triple bar icon** and select the **Setting** icon

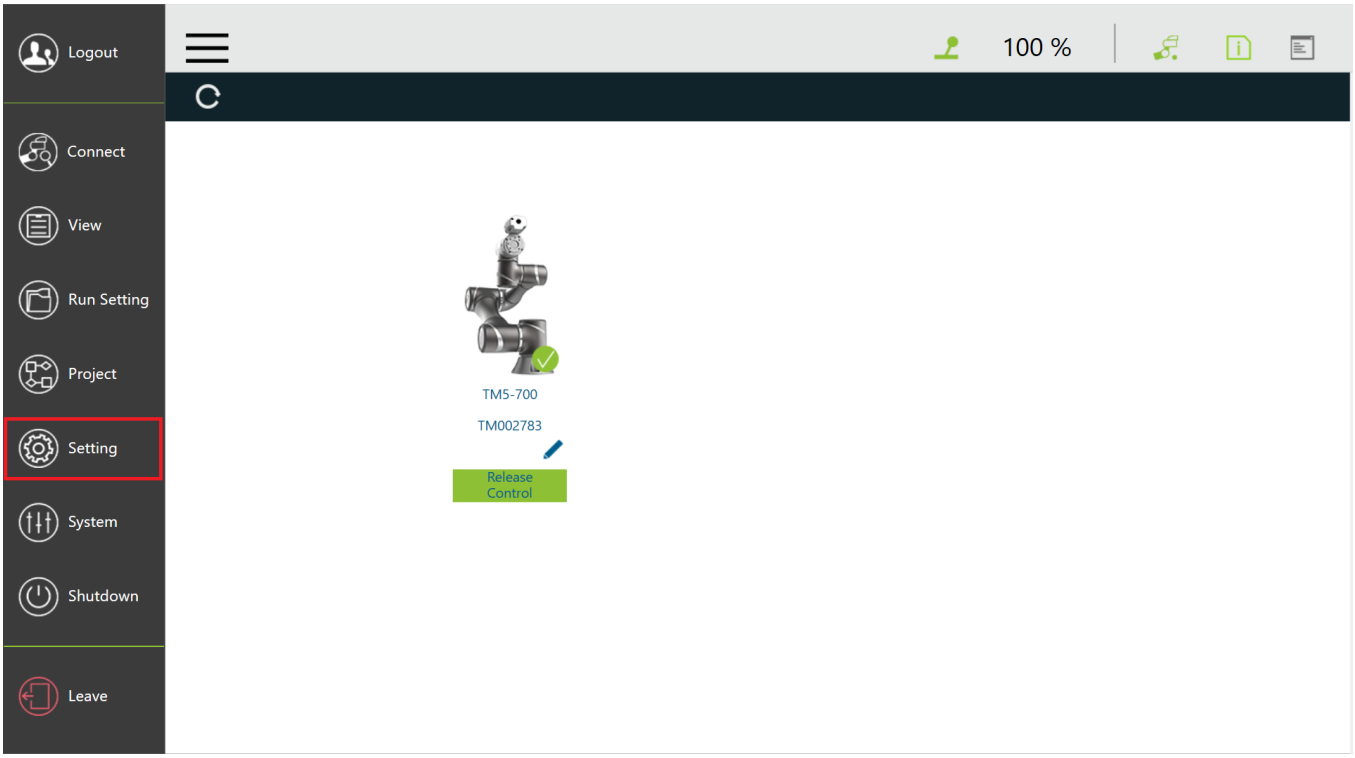

2 Click on **Gripper Button**

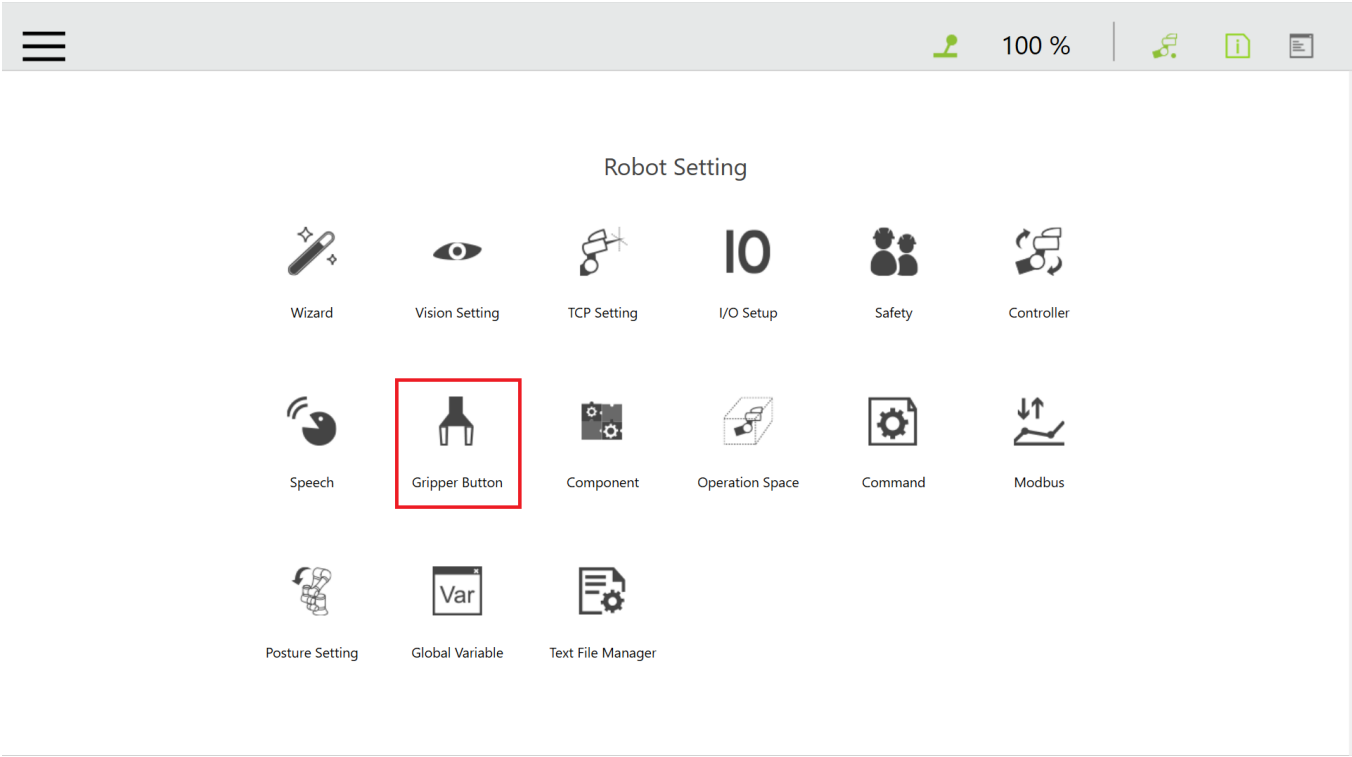

3 In the **Gripper Button** window, tick the **Using Customized Component** radio button and select the Component you want to assign to either one of the gripper actions

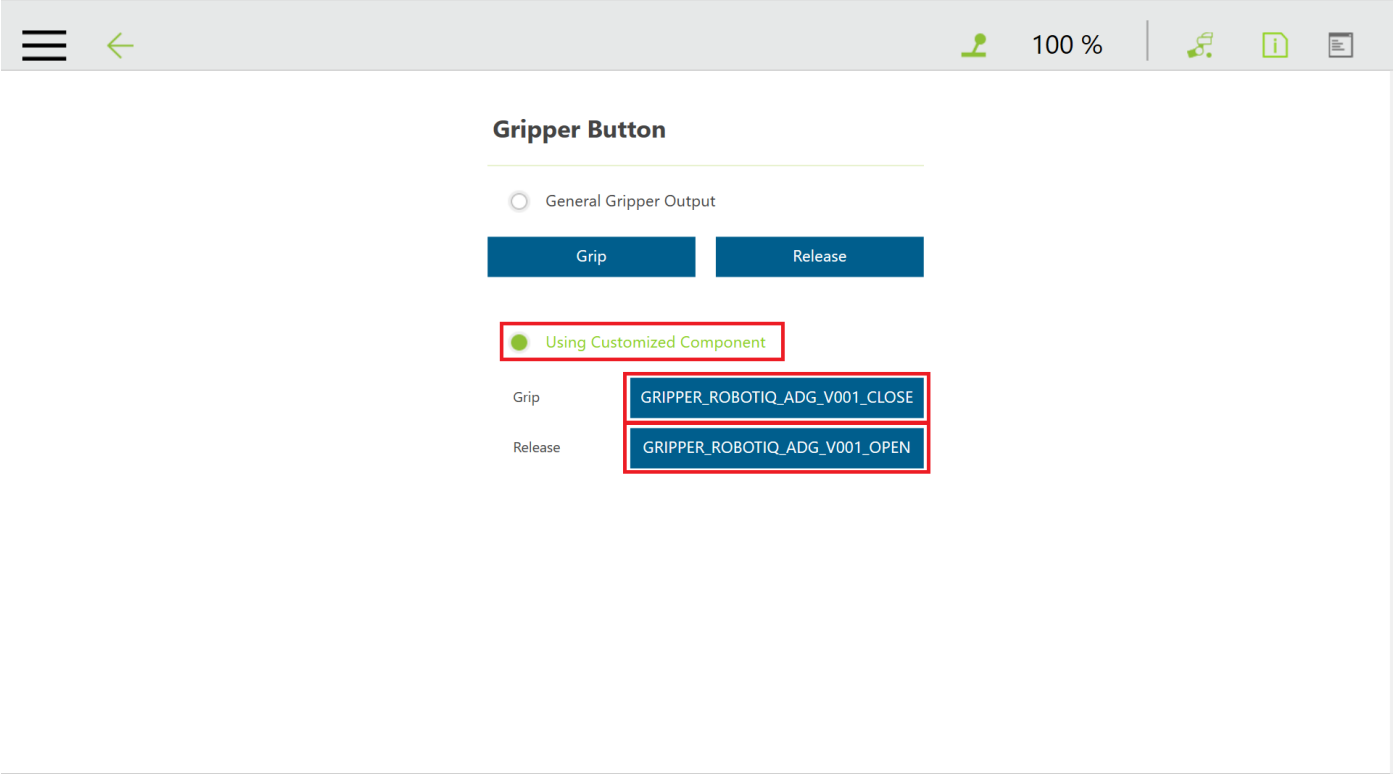

4 In the popup window, select or change the Component you wish to assign to the Gripper action/button, and click **OK**

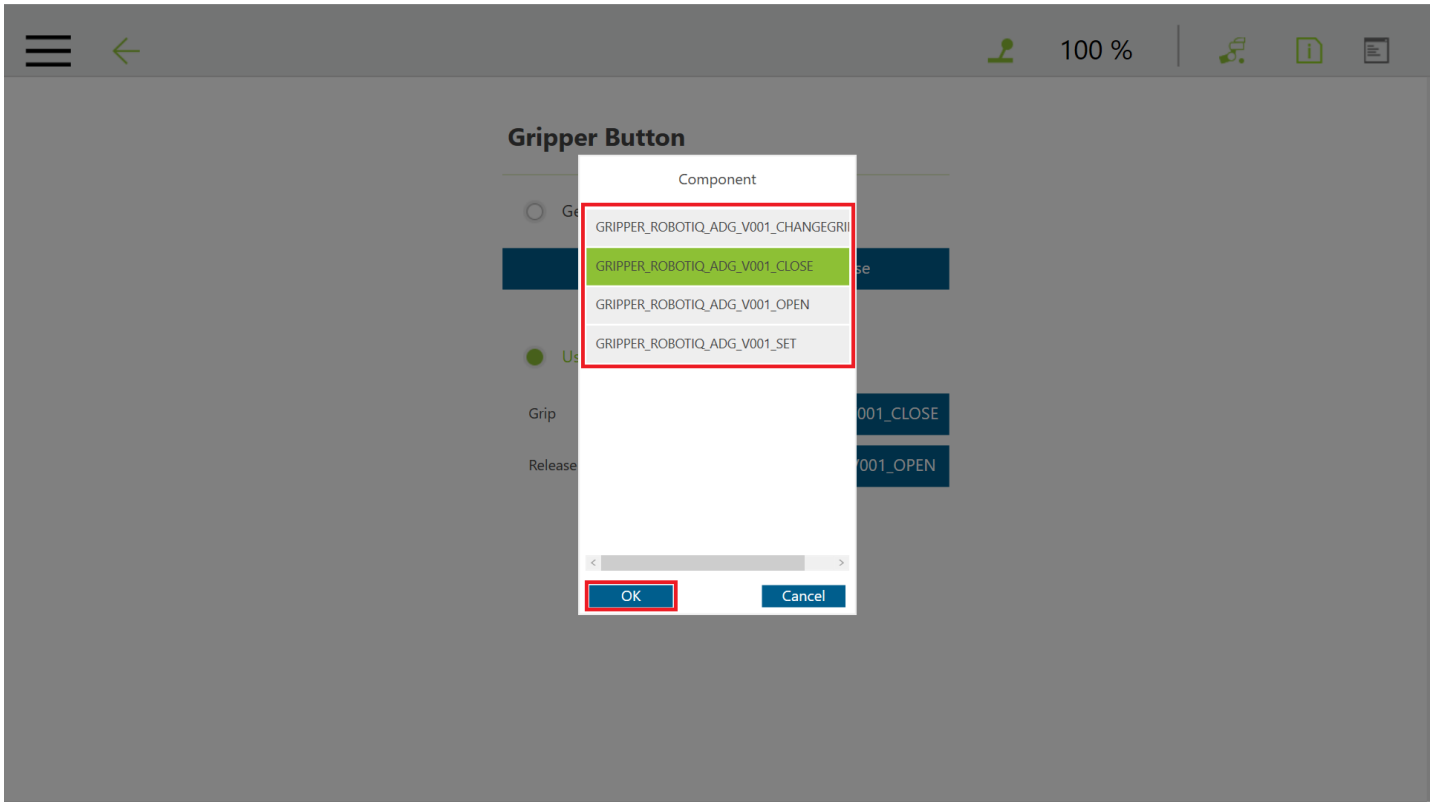

Programming

SET Component

Component Icon	Component Node
ADG_V001	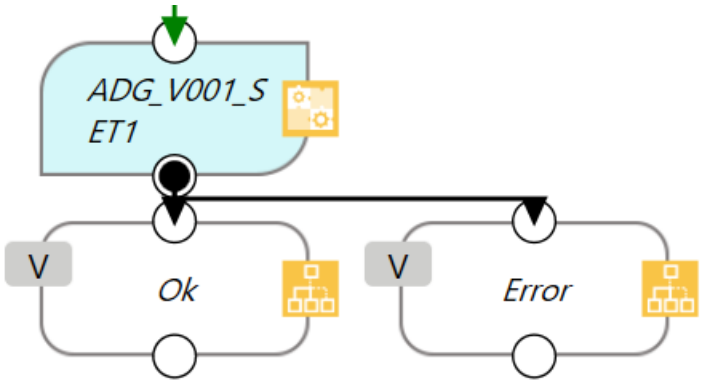

1 Drag and drop the SET Component icon after a program Gateway to place a SET program node (ADG_V001_SET1)

2 Tap the SET node to highlight it and click on the pencil to edit the settings

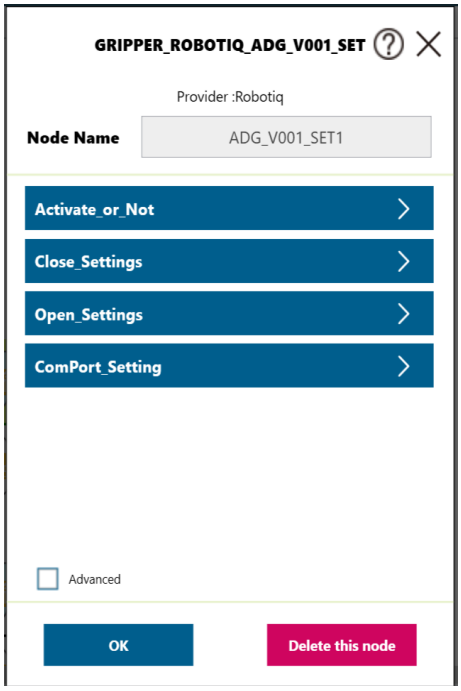

Fig. 4-3: SET Node Settings Menu

Setting	Variable	Type	Default	Description	
Activate_or_Not	var_reset	bool	false	Set True if you want to initialize the gripper in this node. If you only want to change gripping force, position or speed, you don't need to initialize the gripper (please set to false)	
Close_Setting	var_close_force	%	50%	**Set closing force**	
				Hand-E	0~100%=20~130N
	var_close_speed	%	50%	**Set closing speed**	
				Hand-E	0~100%=20~150mm/s
	var_close_pos	%	80%	**Set closing position**	
				Hand-E	0~100%=0~50mm/s
Open_Setting	var_Open_force	%	50%	**Set opening force**	
				Hand-E	0~100%=20~130N
	var_Open_speed	%	50%	**Set opening speed**	
				Hand-E	0~100%=20~150mm/s
	var_Open_pos	%	80%	**Set opening position**	
				Hand-E	0~100%=0~50mm/s
ComPort_Setting	var_ComPort	int	1	Please set as Com1, Com2, Com3, following the com port to which you connect the gripper.	

CLOSE Component

Component Icon	Component Node
ADG_V001	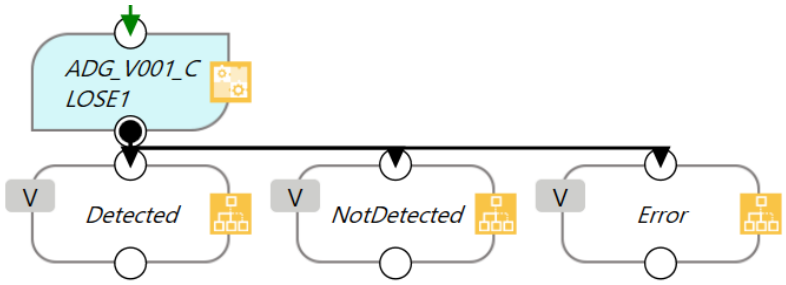

1 Drag and drop the CLOSE Component icon after a program Gateway to place a CLOSE program node (ADG_V001_CLOSE)

2 Tap the CLOSE node to highlight it and click on the pencil to edit the settings

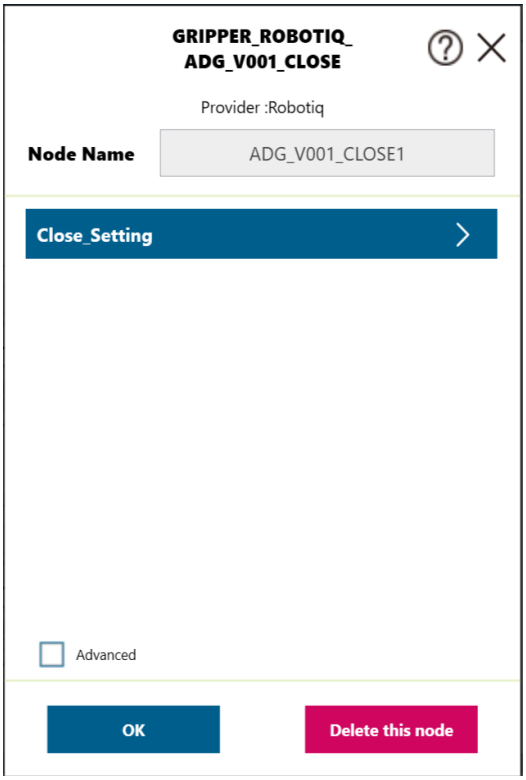

Fig. 4-4: CLOSE Node Settings Menu

Setting	Variable	Type	Default	Description
Close_Setting (SET Node)	var_wait_for_motion_completed	bool	true	Set to false to exit the Close node before the motion is complete.

OPEN Component

Component Icon	Component Node
ADG_V001	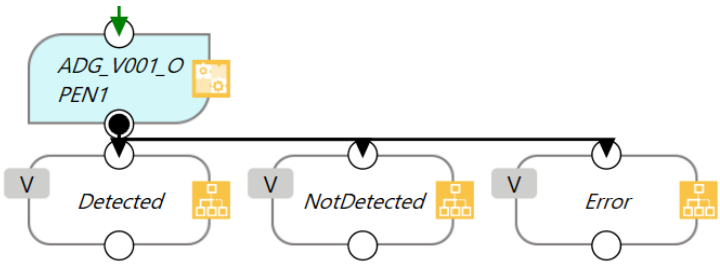

1. Drag and drop the OPEN Component icon after a program Gateway to place a OPEN program node (ADG_V001_OPEN)
2. Tap the OPEN node to highlight it and click on the pencil to edit the settings

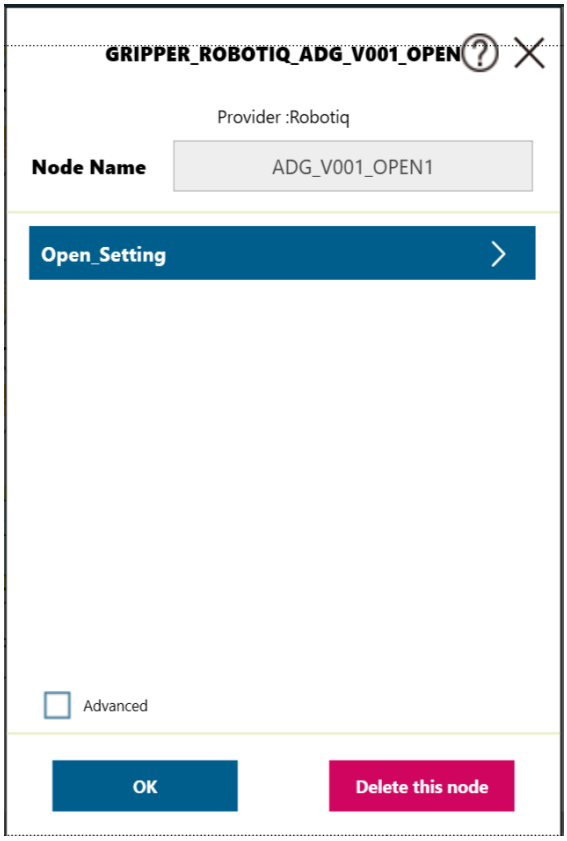

Fig. 4-5: OPEN Node Settings Menu

Setting	Variable	Type	Default	Description
Open_Setting (SET Node)	var_wait_for_motion_completed	bool	true	Set to false to exit the Open node before the motion is complete.

CHANGEGRIPPER Component

Component Icon	Component Node
	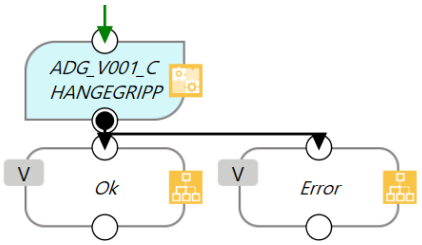

1. Drag and drop the CHANGEGRIPPER Component icon after a program Gateway to place a CHANGEGRIPPER program node
(ADG_V001_CHANGEGR)
2. Tap the CHANGEGRIPPER node to highlight it and click on the pencil to edit the settings

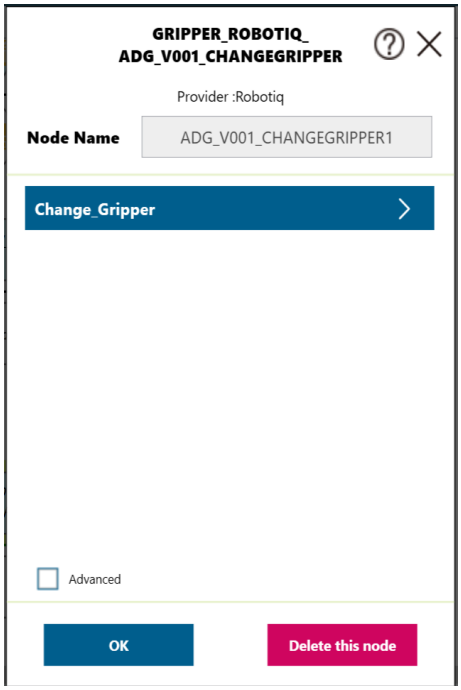

Fig. 4-6: CHANGEGRIPPER Node Settings Menu

Setting	Variable	Type	Default	Description
Change_Gripper	Var_Slave_ID	int	9	Select the Slave ID as the current gripper

Info

Use the Robotiq User Interface to change the Modbus Slave ID Address of the second gripper when using a dual gripper (Default = 9).

Changing the Modbus Slave ID

The user can change the Modbus Slave ID of a Robotiq Gripper via the Robotiq User Interface.

Installer

Browse to the support page of the Gripper in the Software section to download the RUI installer (.exe).

Robotiq User Interface

Browse to the support page of the gripper, in the Documents section, to access or download the instruction manual of the Robotiq User Interface (RUI) for information on the installation and control of the RUI.

1 First, click on the **Modbus RTU Parameters** tab

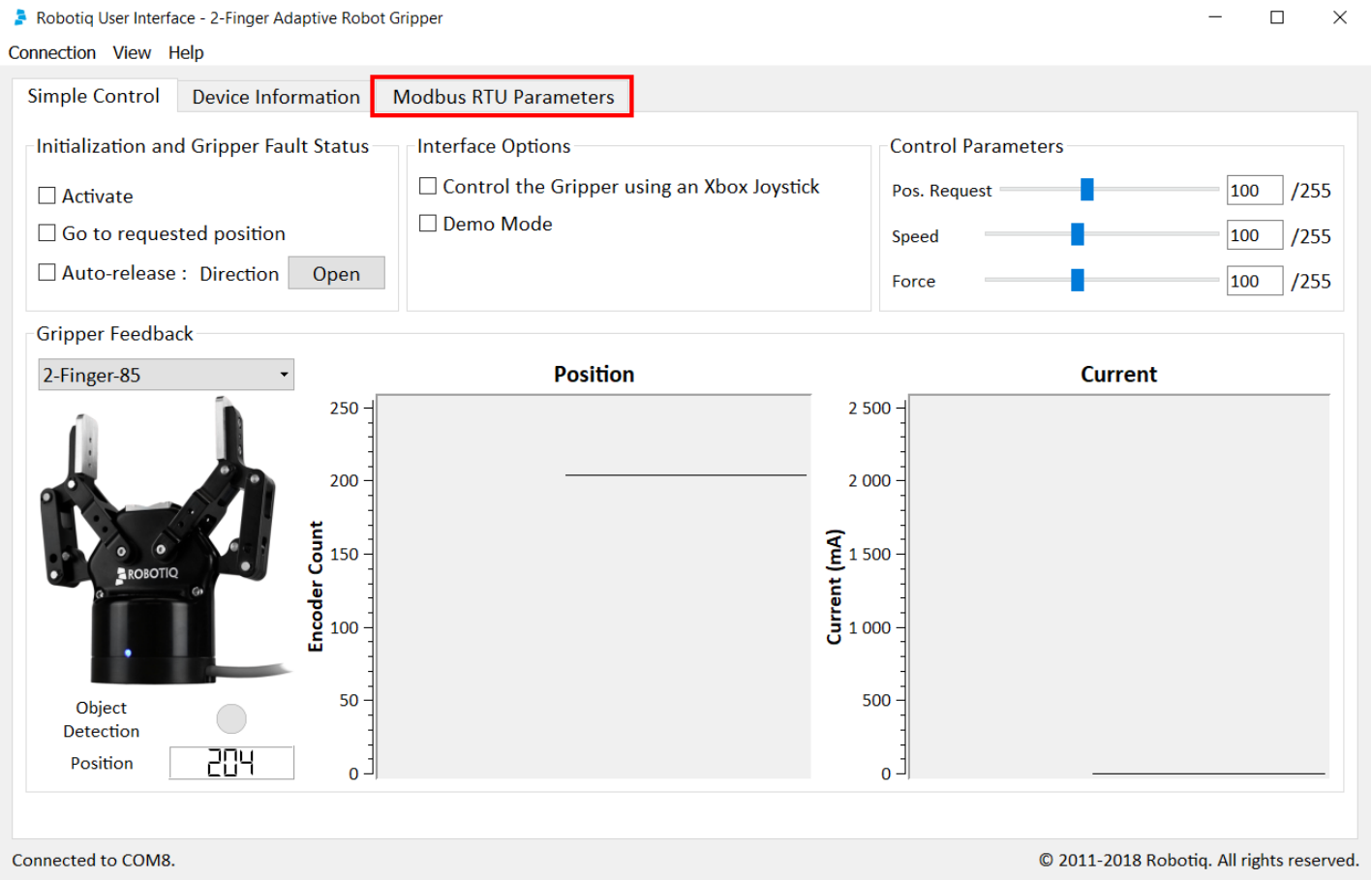

2 Change the Slave ID of the gripper by typing in the corresponding box

3 Click on the Apply button

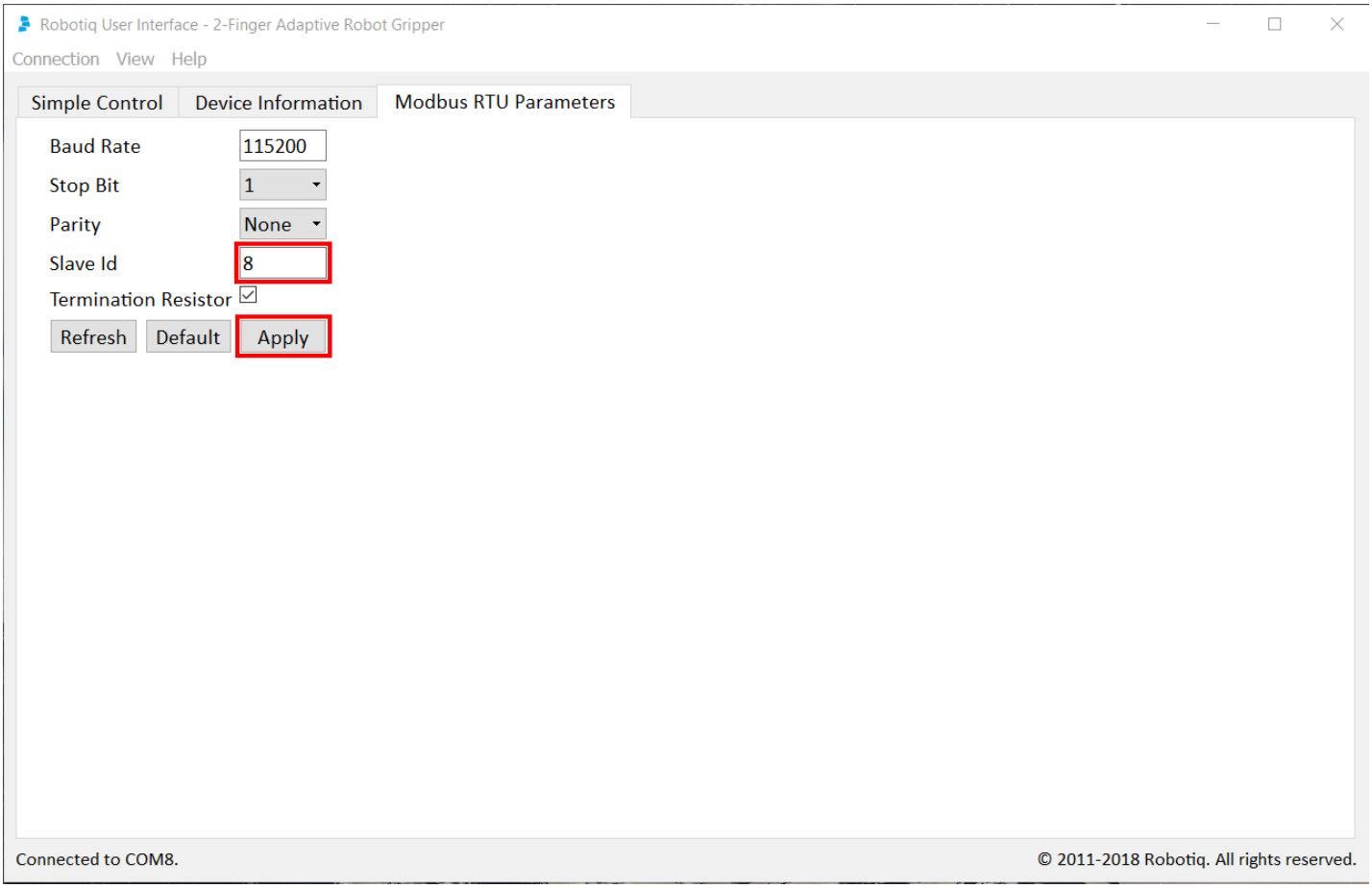

4 Perform a power cycle (24 V) while the USB device remains connected.

- set_tool_voltage(voltage) The voltage argument can be 0, 12 or 24. In the specific case of the Robotiq gripper, use 24 to turn the power on and 0 to turn it off.
- Connection of the grippers:
    1. Physically connect the grippers
    2. Apply the required voltage using set_tool_voltage(24)
    3. Call the rq_reconnect_grippers(False) function to launch the reconnection process in the background of the program
    4. Perform the rest of the program
- Disconnection of the grippers:
    1. Call the rq_disconnect_grippers() function
    2. Turn off the voltage using set_tool_voltage(0;
    3. Physically disconnect the grippers

5. Specifications

> **Info**
>
> This manual uses the metric system. Unless otherwise specified, **all dimensions are in millimeters**.

The following subsections provide data on the various specifications for Robotiq Hand-E Gripper.

- **Technical dimensions** section
  - Dimensions of the Gripper
  - Center of Mass, Tool Center Point and Moment of Inertia
  - Dimensions of couplings
  - Dimensions for custom fingertips
  - Dimensions of standard fingertips
- **Mechanical Specifications** section
- **Electrical specifications** section

5.1 Technical dimensions

5.1.1 Hand-E Gripper

The figure below represents the gripper dimensions with axes X, Y, Z, and origin referenced for finger motion.

> **Info**
>
> All technical drawings in the current section depict aluminum fingers.

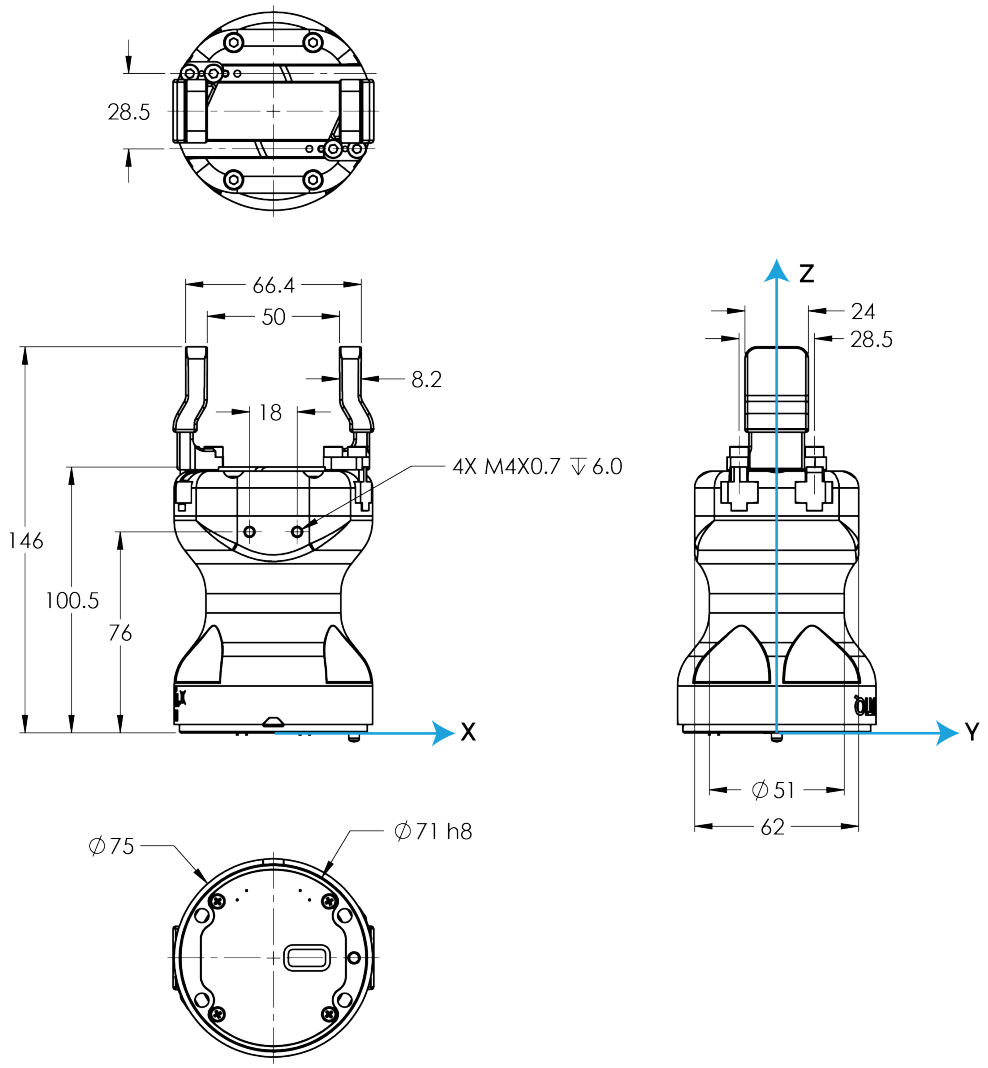

Fig. 5-1: General dimensions of Hand-E (open) with flat rubber (NPR) overmolded fingers.

5.12. Center of Mass, Tool Center Point and Moment of Inertia

This table presents the center of mass and TCP of the Hand-E Gripper.

Product	Center of mass (mm)			TCP (mm)			Mass (g)
	X	Y	Z	X	Y	Z	
Hand-E Gripper	0.0	0.0	59.0	0.0	0.0	157.0	1068

Info

For TCP and center of mass of the Hand-E Gripper used in combination with other Robotiq products, please consult the specific table provided on our support website.

Info

The angle to calculate the TCP for grippers mounted on a dual gripper assembly is as follows:

- Rx1 = 0
- Ry1 = 0.7854
- Rz1 = 0
- Rx2 = 1.22
- Ry2 = 0
- Rz2 = -2.887

The moment of inertia are calculated for a configuration where the fingers are fully open. Here is the approximate moment of inertia matrix for the gripper:

$$I = \begin{bmatrix} I_{XX} & I_{XY} & I_{XZ} \\ I_{YX} & I_{YY} & I_{YZ} \\ I_{ZX} & I_{ZY} & I_{ZZ} \end{bmatrix} = \begin{bmatrix} 5341 & 0 & 0 \\ 0 & 5447 & 0 \\ 0 & 0 & 636 \end{bmatrix} = \begin{bmatrix} 18.3 & 0 & 0 \\ 0 & 18.6 & 0 \\ 0 & 0 & 2.2 \end{bmatrix}$$

$$\mathrm{kg} \times \mathrm{mm}^2 \qquad \mathrm{lb} \times \mathrm{in}^2$$

Fig. 5-2: Inertia matrix for Hand-E.

5.1.3. Couplings

The Hand-E Gripper requires a coupling provided by Robotiq to operate. The coupling is mandatory since it integrates electronics and electrical contacts.

Coupling for ISO 9409-1-50-4-M6

Bolt pattern for coupling **GRP-CPL-062** and **GRP-ES-CPL-062** (please refer to the **Spare Parts, Kits and Accessories** section) is compatible with:

- 50 mm pitch circle diameter:
  - (4) M6-1.0 low head socket cap screw clearance
  - (1) M6 dowel pin
  - ISO 9409-1 standard 50-4-M6

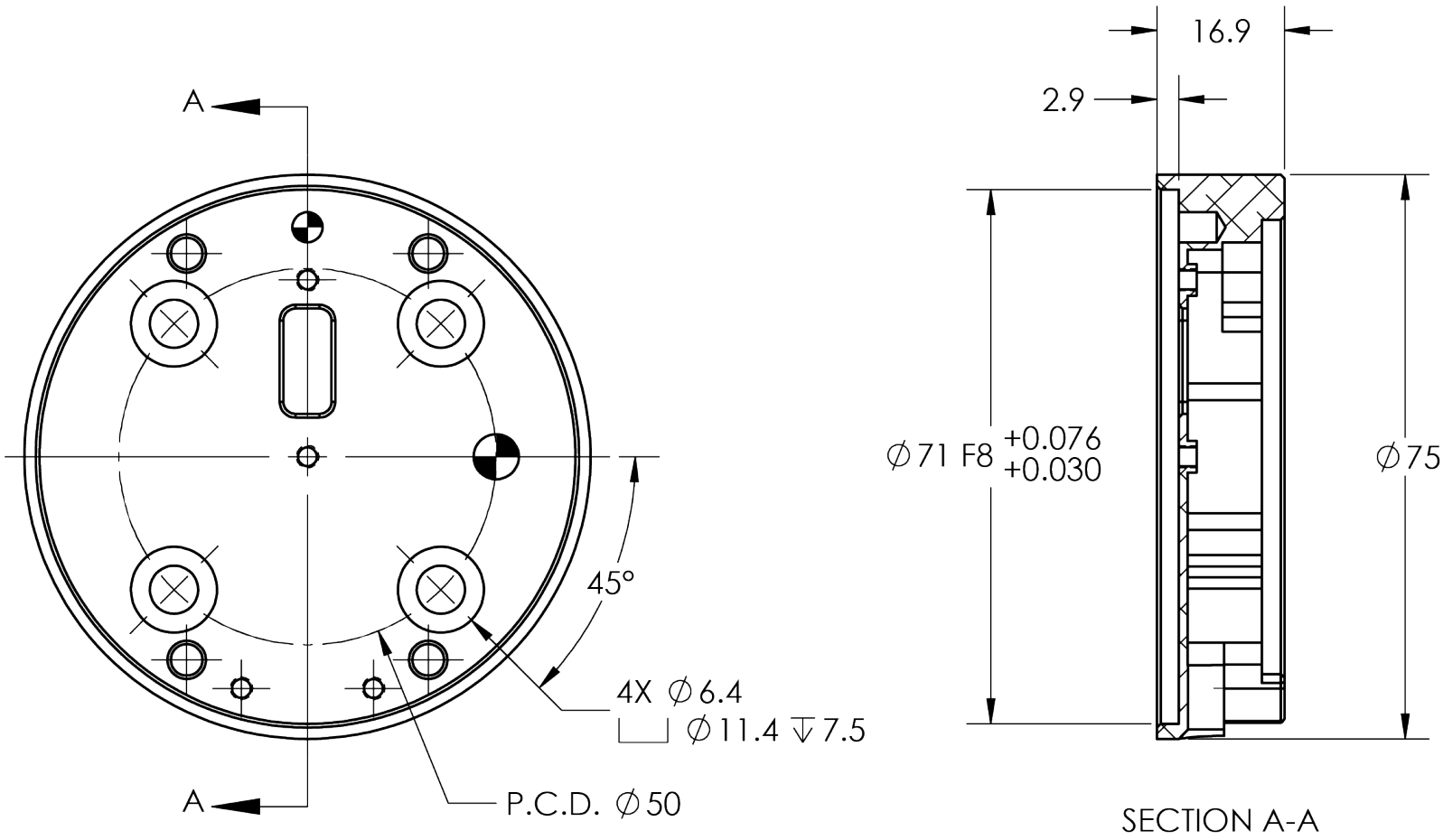

Fig. 5-3: Coupling for ISO 9409-1-50-4-M6.

5.14. Fingers and Fingertips

The contact grip points for Hand-E are its two fingertip pads.

Robotiq offers a selection of fingertips (see the **Spare Parts, Kits and Accessories** section), and users can create custom fingertips.

The figure below represents the fingertip holder, i.e., the permanent, non customizable part of the gripper finger on which the fingertip must be mounted.

As depicted in the technical dimensions of the Hand-E Gripper, the distance between the base of the Gripper and the part on which the fingers are mounted is 100.5 mm.

Hand-E is shipped mounted with standard flat rubber (NBR) overmolded fingers.

Custom fingertip design must meet the following specifications:

- Forces exerted at the end of the fingertips must not exceed 139 N, regardless of the direction. Please refer to the **Moment and Force Limits for Standard Fingertips** section for more details.

> **Warning**
>
> The following limits must be respected at all times.
> Calculation of maximum moment and force should include robot acceleration and safety factors.

- Refer to the **Mechanical Specifications** section to evaluate the grip force according to your fingertip design.

> **Info**
>
> You can install custom fingertips directly on the rack or on the fingertip holder.

> **Tip**
>
> Fingertips can be mounted directly on racks or fingertip holders.

Rack

Fingers are installed directly on a rack. You may customize your own fingers to mount them on this part. NBR overmolded flat fingers (HND-FIN-MLD-KIT) are mounted directly onto it.

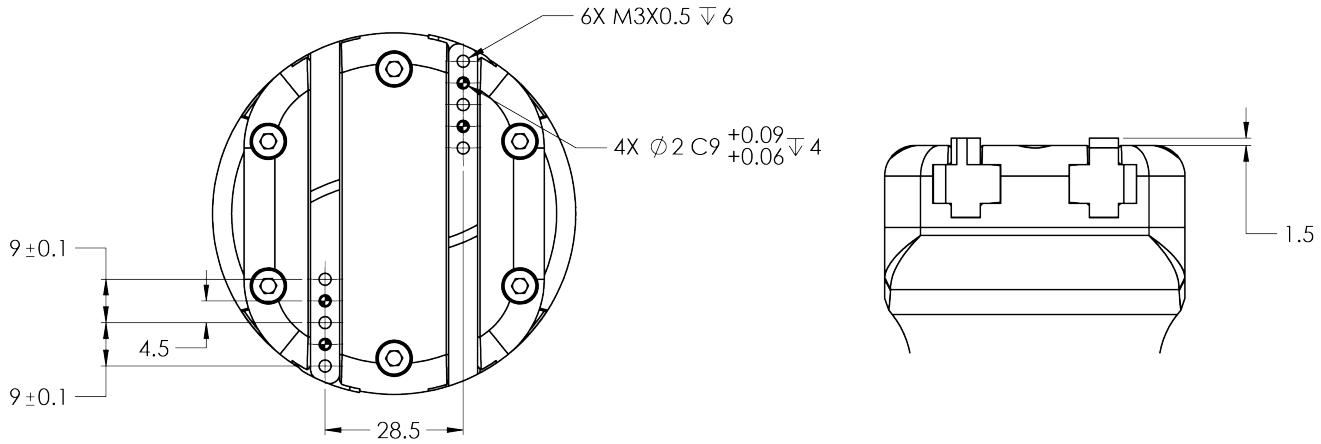

Fig. 5-4: Racks in rack housing

Fingertip Holders

To install fingertips on racks use fingertip holders (HND-TIP-HLD-KIT), and refer to the **Spare Parts, Kits and Accessories** section. You may customize fingertips to install directly on those. V-groove fingertips (HND-TIP-VGR-KIT) can be installed on fingertip holders.

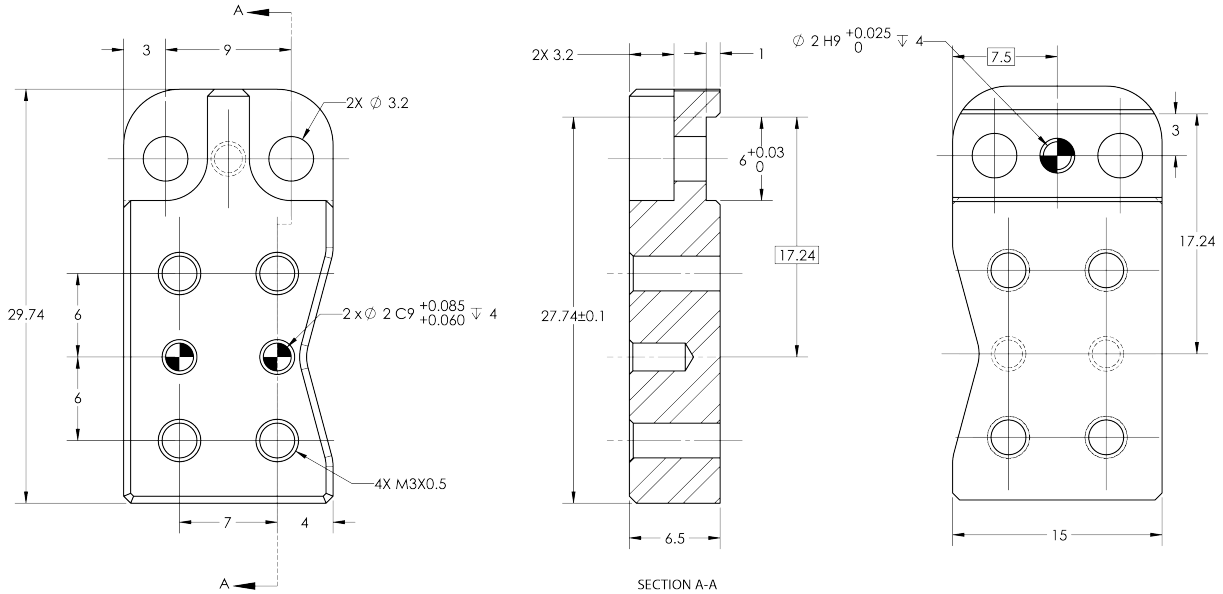

Fig. 5-5: Fingertip holder.

Fingertip Extenders

The figure below represents the fingertip extenders (HND-TIP-EXT-KIT). For details, see the **Spare Parts, Kits and Accessories** section. This extender allows an opening ranging from 40 up to 98 mm.

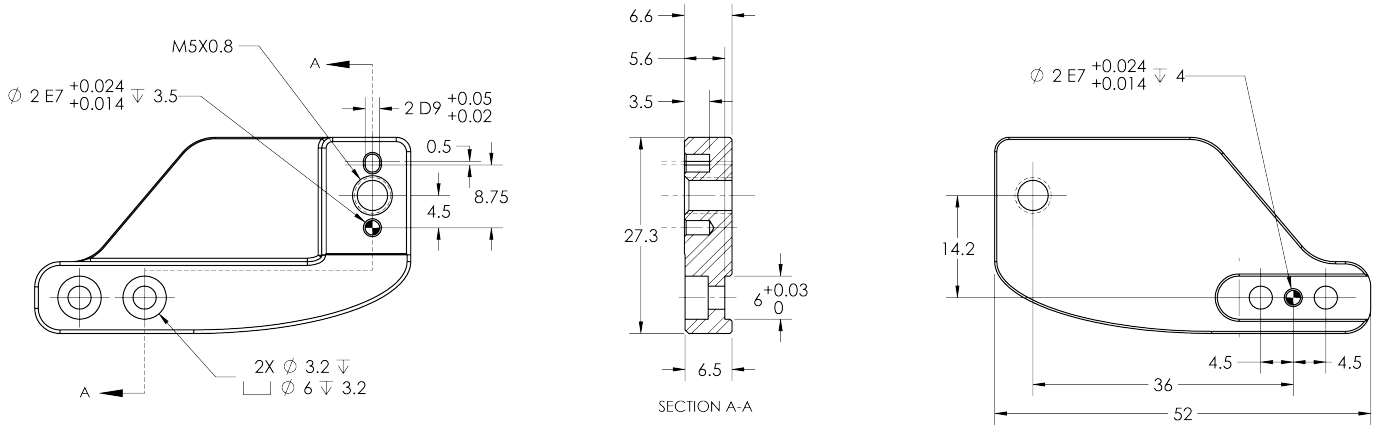

Fig. 5-6: Fingertip Extender

Flat Rubber (NBR) Overmolded Fingers

The figure below represents flat rubber (NBR) overmolded fingers (HND-FIN-MLD-KIT). For details, see the **Spare Parts, Kits and Accessories** section. This finger allows a 50 mm stroke.

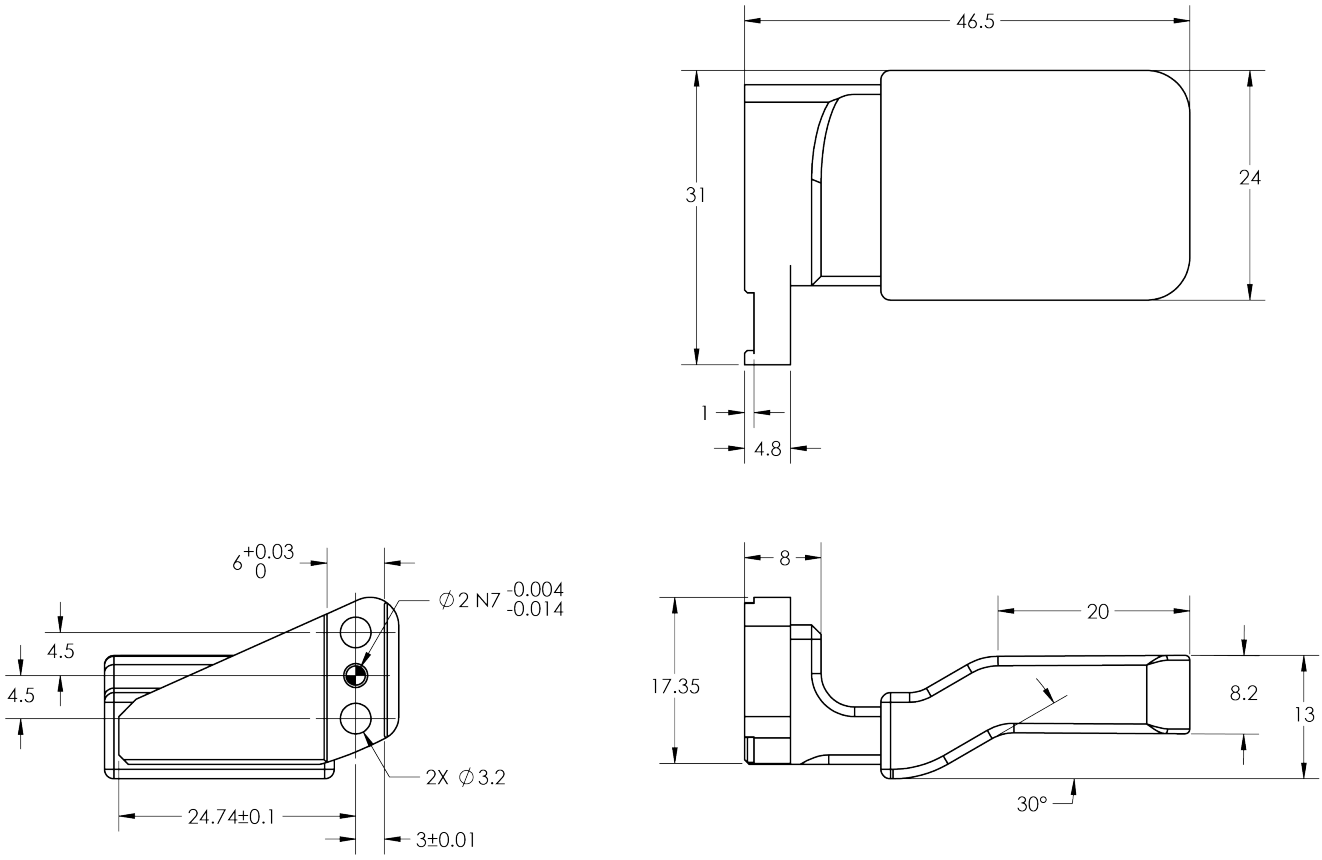

Fig. 5-7: Flat NBR overmolded finger.

Flat Aluminum Finger

The figure below represents a flat aluminum finger (HND-FIN-ALU-KIT). For more details, refer to the **Spare Parts, Kits and Accessories** section. This finger allows a 50 mm stroke.

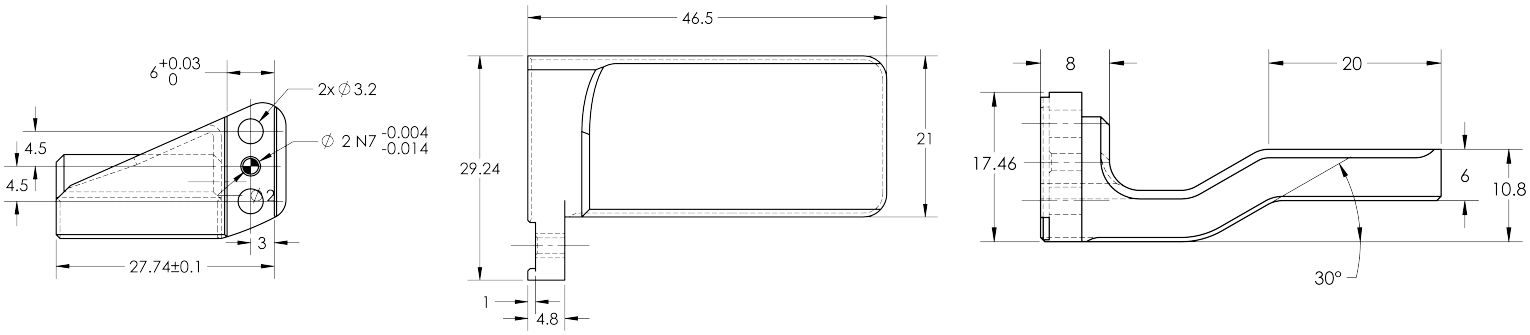

Fig. 5-8: Flat aluminum finger.

V-Groove Fingertip

The figure below shows the V-groove fingertip (HND-TIP-VGR-KIT). For details, see **Spare Parts, Kits and Accessories** section. This fingertip inner surface has vertical grooves, making it ideal for picking cylindrical parts. This fingertip must be mounted on the racks using the fingertip holder (HND-TIP-HLD-KIT).

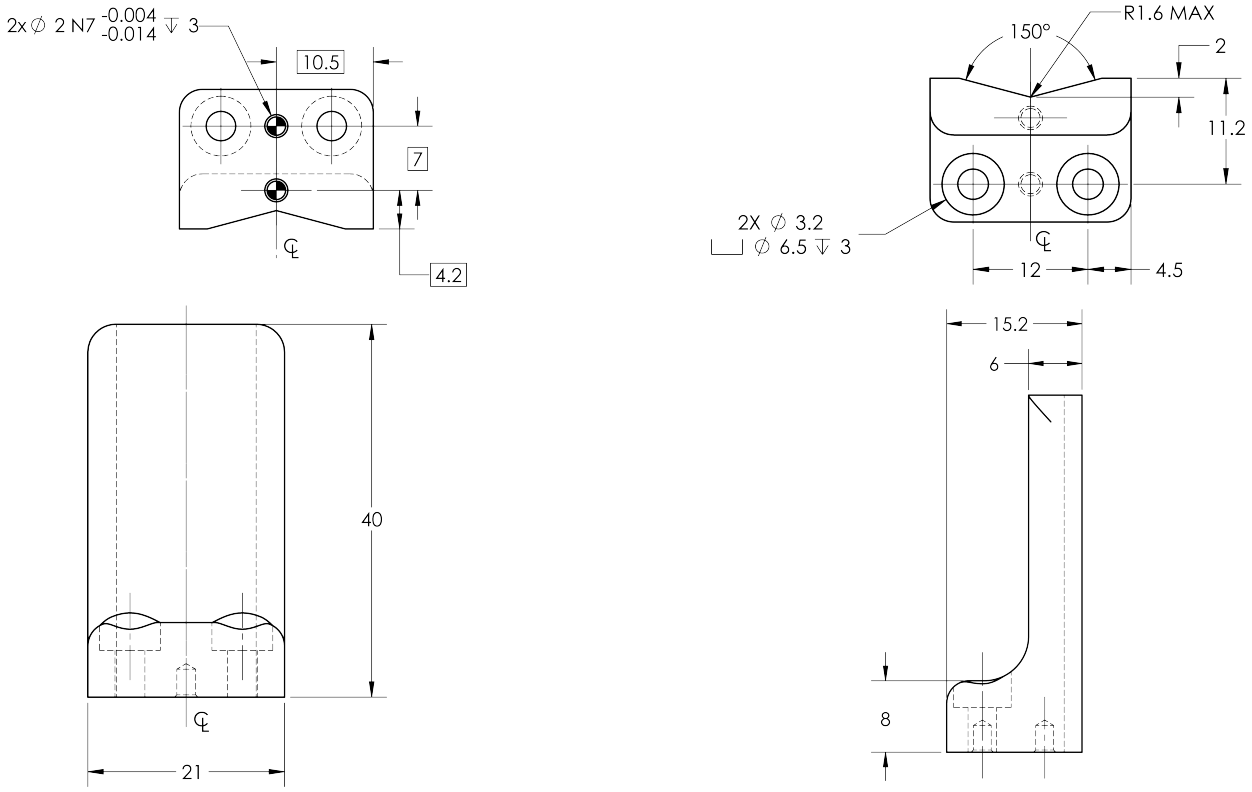

Fig. 5-9: Grooved fingertip

5.2. Mechanical Specifications

5.2.1. Hand-E Gripper

Info

The data shown in the table below is typical of newly manufactured product, and will vary with product use and wear.

Specification	Metric	Imperial
Stroke	50 mm	1.97 in
Grip force	20 N - 185 N	4.5 lbf - 41 lbf
Maximum load	139 N	31.2 lbf
Nominal payload[1]	7 kg	15.4 lb
Weight (with coupling)	1070 g	2.3 lb
Finger speed range	20 - 150 mm/sec	0.8 - 5.9 in/sec
Position repeatability[2]	0.025 mm	0.001 in
Position resolution[3]	0.2 mm	0.008 in
Minimum part detection	0.5 mm	0.02 in

Table 5-1: Mechanical specifications of the Hand-E Gripper fitted with coupling GRP-CPL-062 and aluminum fingertips (without NBR).

[1]The nominal payload is defined as the payload that determines the maximum load at a given acceleration (2 g). This payload needs to be validated based on the information found in subsequent subsections of this manual.

[2]Repeatability is defined as the positional deviation resulting from the average displacement determined when picking an object using standard aluminum fingertips. For more details, please refer to the blog.robotiq.com article on repeatability. Position repeatability varies depending on product wear and operating conditions.

[3]Resolution is the increment modified from a 1 bit difference of position/speed/force request (from 0 to 255).

5.2.2. Friction Grip Payload

The nominal payload is defined as the payload that determines the maximum load at a given acceleration.

The nominal payload needs to be assessed and validated based on the following criteria.

- **Payload** corresponding to the application, in accordance with the maximum load of the gripper
- **Weight** of the workpiece (without eccentricity)
- **Distance** of the load from the top of the Gripper (which is at a 100.5 mm distance from the base of the Gripper)
- **Eccentricity** of the load

Payload Corresponding to the Application

The maximum load of the Gripper (139 N) has to account for the entire robot trajectory, namely:

- The maximum acceleration of the robot (and potential decelerations, e.g., due to a stop)
- The direction of gravity in relation to the robot's trajectory
- The forces exerted on the Gripper (e.g., when putting down a grasped object on a surface using the Gripper)

The acceleration (or deceleration) times the mass of the object is a force exerted on the Gripper.

The sum of all forces must not exceed the maximum load of the Gripper (139 N).

$$payload\ \ mass * (acceleration + gravity) + external forces < 139N$$

Warning

Robot acceleration must be accounted for in payload calculations.

Robot emergency stops will lead to major decelaration velocities.

Info

The Gripper has a power off brake. When the force setting is reached, the brake automatically engages for power consumption efficiency and safety purposes.

Even without power, the gripping force is maintained.

Weight of the Workpiece

Assess and validate the weight of the workpiece to make sure it does not fall off the gripper when transported by the robot.

The weight of the workpiece depends on the way it is held by the Gripper, either by a form-fit grasp or a friction grasp.

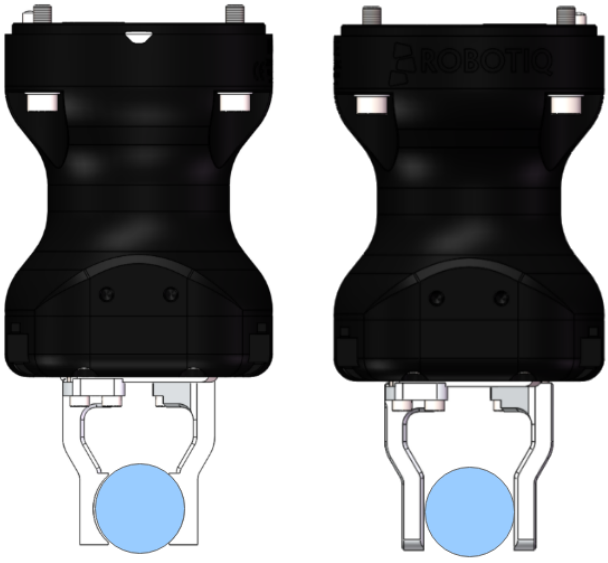

Fig. 5-10: Form-fit grasp (left) and friction grasp (right).

- The form-fit grasp consists in the Gripper's finger pads mechanically constraining the object. The payload can be calculated as shown in the **Payload Corresponding to the Application** section.
- A friction grasp consists in the object (payload) being held by the Gripper's pads solely by friction in whichever part of the robot trajectory. Calculate the friction force to determine the weight of the workpiece. The friction force depends on the friction coefficient between the pads and the object as well as the actual gripping force of the Gripper. The following equation can be used to calculate the maximum load that can be sustained during a friction grasp, where:
  - **W** is the load force sustainable by the friction grasp
  - **F** is the force applied on the load by the Gripper's finger pads (185 N if the force setting is at 100%)
  - C_f is the friction coefficient between the Gripper's finger pads and the load
  - S_f is a safety factor to be determined by the robot integrator

$$W = \frac{2FC_f}{S_f}$$

The calculation of the payload mass has to account for the acceleration, the gravity and the external forces.

$$workpiece\ \ weight = \frac{W - external\ \ forces}{acceleration + gravity}$$

Example—Consider the Following

- NBR overmolded fingertips (HND-FIN-MLD-KIT)
- A lubricated workpiece (exposed to cutting oils in a machine tending application)
- A tested static friction coefficient of 0.3
- The maximum grasping force of 185 N
- A safety factor of 1.2

$$W = \frac{2*185N*0.3}{1.2}$$

$$W = 92.5\ \ N$$

- A robot acceleration of 10 m/s^2
- No external forces

$$workpiece\ \ weight = \frac{92.5-0}{10+9.81}$$

$$workpiece\ \ weight = 4.7\ \ kg$$

Caution

The most important factor in payload and weight calculations is the **friction coefficient**.

Robotiq recommends assessing, validating and testing the resulting friction coefficient.

Distance of the Load

The distance of the load (Z-axis offset) is calculated from the top of the Gripper, which is itself at a 100.5 mm distance from the base of the Gripper, as depicted in the technical specifications of the Hand-E Gripper.

Observe the external forces (including the accelerated payload) applied to the finger attachment (when custom fingers are used).

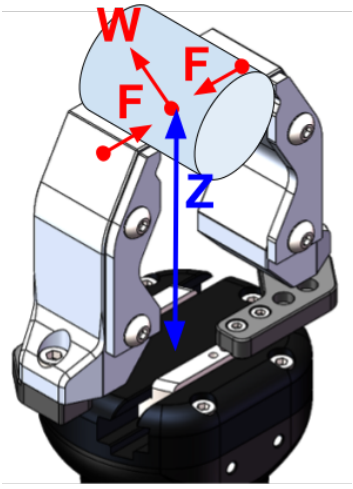

The maximum load force W depends on the distance Z (on the Z-axis) at which said force is applied at finger attachment.

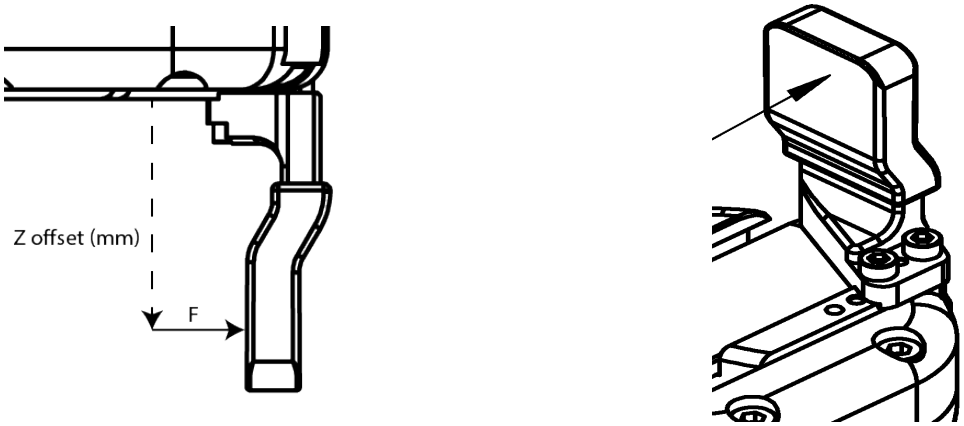

Fig. 5-11: Z-axis offset at which force/payload is applied.

At finger attachment, the maximum force each M3 screwed joint can sustain in fatigue is 2653 N.

The maximum load force is therefore increased if three (3) screws are used instead of two (2).

Refer to the following graph to find the maximum load force based on the distance in Z at which said force is applied, and the number of screws used at finger attachment.

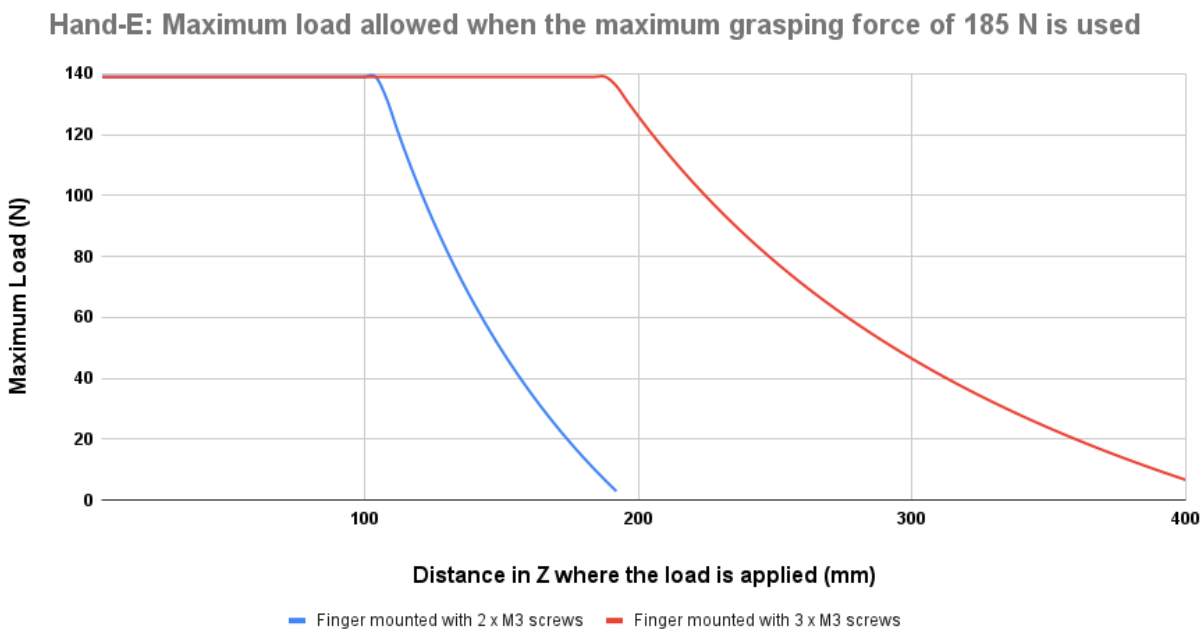

Fig. 5-12: Maximum Load (Payload + External Forces) vs. Z-Offset from Finger Attachment.

- The **blue curve** in the graph represents the maximum load (W) at a given Z-offset for a custom finger design **mounted directly on the rack with two (2) M3 screws**.
- The **red curve** in the graph represents the maximum load (W) at a given Z-offset for a custom finger design **mounted directly on the rack with three (3) M3 screws**.

Info

The data is calculated at the resulting position of the force applied, based on the strength of the M3 screws used.

It represents the maximum load force that can be exerted on the fingers (payload + external force).

The maximum grasping force is included in the calculations.

Caution

In order to address other custom cases in regard to a specific application, pay attention to fastener strength when mounting fingers to the rack and, in turn, to the body of the Gripper.

Eccentricity of the Load

The eccentricity of the load is the distance between the center of gravity of the load and the point at which the load makes contact with the Gripper fingers (d_W in the figure below).

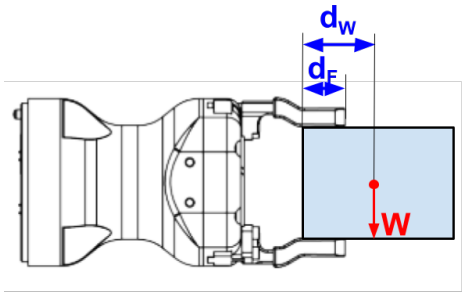

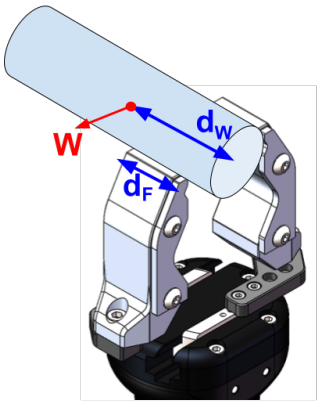

Use the following equation to calculate th maximum load if the center of gravity of the object is not centered in between the finger pads.

$$W < \frac{F}{d_W/d_F - 1/2}$$

Where:

- **W** is the load force
- **F** is the force applied by the Gripper's pads on the load (185 N if the force setting is at 100%)
- **d_W** is the distance between the center of gravity of the load and the point at which the load makes contact with the Gripper fingers
- **d_F** is the length of the portion of the Gripper's pads that is in contact with the object

Tip—Rule of Thumb

For the maximum force (F = 185 N), the distance of the center of gravity must not exceed 1.83 times the length of the gripper pads (d_W<1.83 d_F) to operate with the maximum load allowed (W = 139 N).

If the distance of the center of gravity is greater (d_W>1.83 d_F), then the maximum load allowed lowers below 139 N, according to the previous equation.

5.2.3. Moment and Force Limits for Standard Fingertips

The standard fingertips of the Hand-E Gripper have limits for moment and force values.

The maximum moment and force values are independent of the grasp force the Gripper applies on the payload.

For payload calculations, please refer to eh the **Friction Grip Payload** section.

Warning

Always operate within range.

Calculation of maximum moment and force values should include robot acceleration and safety factors.

Parameter	Hand-E with Aluminum Fingers (without NBR)
F_x, F_y, F_z	139 N
M_x*	2.65 Nm
M_y*	3.74 Nm
M_z*	2.00 Nm

Table 5-2: Maximum moment and force values

*Moments in x and y are calculated from the base of the fingers, as shown in the figure below.

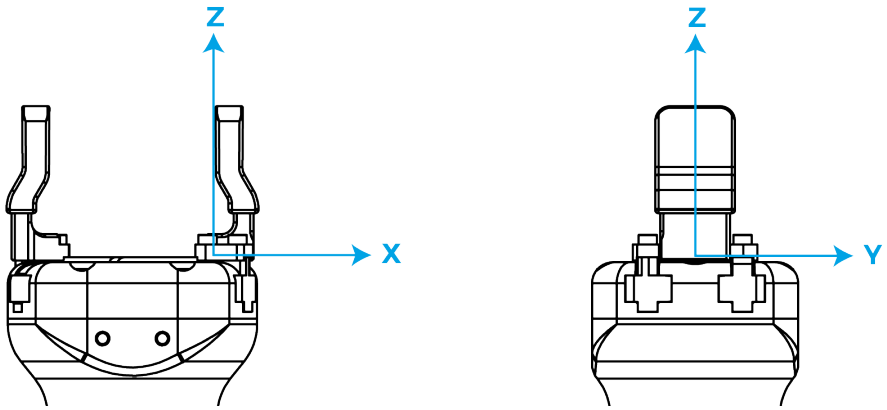

Fig. 5-13: Reference frame for maximum force and moment values applied to the fingers

Info

Usage examples with listed limits:

- After picking its normal payload, the robot can use Hand-E to apply a force of up to 139 N, minus the weight of the load, in any direction. Applying more than 139 N (including the weight of the load) can damage the Gripper or result in payload loss.
- The Gripper can pick up a screwdriver and apply 2 Nm of torque to fasten a screw (such a moment would be applied in the Z-axis).

5.3. Electrical specifications

SPECIFICATION	VALUE
Operating supply voltage	24 V DC ±10%
Quiescent power (minimum power consumption)	1 W
Peak current	680 mA

6. Maintenance

The Hand-E Gripper requires only external maintenance with limited downtime.

Maintenance is required after specified usage, measured in cycles (see Info box below for details about cycle definition).

Following the maintenance interval will ensure :

- Correct functioning of your gripper.
- Validity of your warranty.
- Proper lifetime for your gripper.

Warning

Unless otherwise indicated, any **repairs** done on the gripper will be performed by Robotiq.

Info

A cycle is defined as a **go to requested position** command that results in grip force being applied (closing the fingers on themselves or picking an object while opening or closing).

Operation	Daily	Weekly	1 M cycles	2 M cycles
Gripper Cleaning	Dirty conditions	Normal conditions		
Periodic Inspection			X	
Rack and pinion mechanism cleaning				X

Table 6-1: Maintenance Intervals.

Caution

Always turn off the robot and the gripper power supply before performing any maintenance operations.

Maintenance operations are for the average normal usage of the gripper, the maintenance intervals must be adjusted according to environmental conditions such as:

- Operating temperature
- Humidity
- Presence of chemicals
- Presence of physical parts (debris, scraps, dust, grease etc.)

- Interaction with operated parts (sharp or rough)
- Dynamics of the operation (accelerations)

6.1 Gripper cleaning

Maintenance Interval	Tools You Need	Parts You Need
Weekly or daily in dirty operating conditions	• 4 mm hex key • Dry tissue or towel • Low strength thread locker	None (unless damage is detected)

Caution

Always turn off the robot and the gripper power supply before performing any maintenance operations.

Caution

The maintenance operator must be grounded to prevent electrostatic discharge that could damage the gripper electronics.

1. Remove the gripper from its coupling using the 4 mm hex key to unscrew the four (4) M5-0.8 x 25mm socket head cap screws. Note that each screw uses a tooth lock washer, do not lose them.
2. Clean the gripper with a dry towel, remove all debris, dirt and dust from the surface of the gripper, clean all pads, dry thoroughly.
3. Clean the coupling with a dry towel, pay particular attention to the electrical contact.
4. Visually inspect the gripper and pay attention to any visible damage.
5. Put the gripper back on and secure it with the four (4) M5-0.8 x 25mm socket head cap screws and tooth lock washers.

When cleaning the gripper, verify that the fingers or fingertips are still intact. If there is wear visible, you can change the fingers or fingertips, using the ones provided by Robotiq or custom ones. See **Spare Parts, Kits and Accessories** section to order Hand-E replacement parts.

In order to replace a finger:

1. Remove the worn finger by removing the M3 screws.
2. Clean the rack and dry thoroughly.
3. Insert the new finger on the rack.
4. Secure the finger using the provided M3 screws, apply low strength thread locker to the M3 screw threads.
5. Repeat for remaining finger.

In order to replace a fingertip:

1. Remove the worn fingertip by removing the M3 screws.
2. Clean the fingertip holder and dry thoroughly.
3. Insert the new fingertip in the fingertip holder.
4. Secure the fingertip using the provided M3 screws, apply low strength thread locker to the M3 screw threads.
5. Repeat for remaining fingertip.

6.2. Periodic inspection

Maintenance Interval	Tools You Need	Parts You Need
Monthly	• 4 mm hex key • Dry tissue or towel	None (unless damage is detected)

Caution

Always turn off the robot and the gripper power supply before performing any maintenance operations.

1. Remove and clean the gripper following instructions in the **Gripper cleaning** section
2. Inspect the gripper
   - Finger or fingertip wear must not affect gripping, if wear is visible and affects movement, change accordingly (refer to the **Gripper cleaning** section)
   - Check for any collision damage, if damage is visible, contact support@robotiq.com
   - Check for any sign of wear on the gripper chassis; if wear is present and may affect the gripper, contact support@robotiq.com
3. Put back in place respecting to the instructions from the **Gripper cleaning** section
4. Finger movement must be symmetric and fluid; test opening and closing of the gripper:

6.3. Rack & pinion mechanism cleaning

Maintenance Interval	Tools You Need	Parts You Need
Every 2M cycles or more frequently in dirty operating conditions	• 4 mm hex key • Dry tissue or towel • Low strength thread locker • Grease (Mobilith SHC1500 or equivalent.)	None (unless damage is detected)

Caution

Always turn off the robot and the gripper power supply before performing any maintenance operations.

1. Open the gripper to an intermediate position, so you do not hide the six (6) M4 screws holding the rack housing in place.
2. Remove the gripper from its coupling using the 4 mm hex key to unscrew the four (4) M5-0.8 x 25mm screws. Note that each screw uses a tooth lock washer, do not lose them.
3. Remove the six (6) M4 screws holding the rack housing.
4. Gently pull the rack housing away from the body of the gripper.
5. The finger's racks will slide off freely from the rack housing. Clean the rack housing, the racks and the pinion using a degreaser. Dry thoroughly. Clean the fingers (finger holders and fingertips if that is the case) with a dry towel. Remove all debris, dirt and dust
6. Clean the coupling with a dry towel, pay particular attention to the electrical contact.
7. Clean the gripper according to the procedure described in the **Gripper cleaning** section.
8. Visually inspect the gripper and pay attention to any visible damage.
9. Apply grease on the racks. Put it on **all surfaces except the face with the tapped holes**.

Info

Use Mobilith SHC1500 grease or an equivalent.

10. Slide the racks back in the rack housing.
11. Reinsert the rack housing with racks on the gripper. Make sure the racks go in symmetrically compared to the center of the gripper. As a reference, both distances **d** represented in the figure below should be the same.

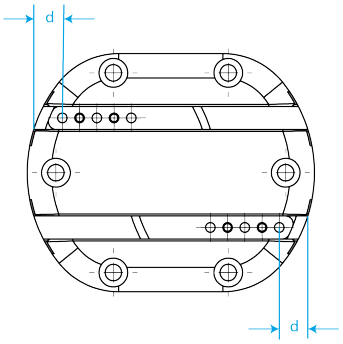

*Fig. 6-1: Distance **d**: distance between racks and gripper frame.*

12. Secure the rack housing using the six (6) M4 screws. Apply low strength thread locker to the M4 screw threads.
13. Put the gripper back on the coupling and secure it with the four (4) M5-0.8 x 25mm screws and tooth lock washers.

7. Spare Parts, Kits and Accessories

The following list is up-to-date at print time and is subject to change. Check online for updates.

> **Info**
>
> Unless specified, screws, dowel pins and other hardware are only included for grippers, and not for robots.

Item	Description	Ordering Number
Hand-E Basic Gripper Unit	Hand-E basic gripper unit, includes flat rubber (NBR) overmolded fingers (HND-FIN-MLD-KIT)	HND-GRP
Kit for TM robot	• Basic gripper unit (HND-GRP) • Fingertip starting kit (HND-TIP-START-KIT) • End-effector coupling kit (GRP-CPL-062) • 10-meter Robotiq device cable • RS485 to RS232 converter • RS485 to USB converter • Screw kit • USB storage device	HND-TM-KIT
Controller	Optional controller for industrial communications. See Robotiq Universal Controller manual for more information.	UNI-CTR-XXXX
Hand-E flat rubber (NBR) overmolded finger kit	• 2 x flat rubber (NBR) overmolded fingertips • 1 x screw kit	HND-FIN-MLD-KIT
Aluminum Finger Kit	• 2 x aluminum fingers • 1 x screw kit	HND-FIN-ALU-KIT
Fingertip Starting Kit	• 1 x Fingertip Holder Kit • 1 x V-Groove Fingertip Kit • 1 x Aluminum Fingertip Kit • 1 x hex key • 6 x dowel pins M2 X 6 • 8 x M3-0.5 X 8 screws	HND-TIP-START-KIT

Item	Description	Ordering Number
Flat Silicone Fingertip Kit	• 2 x flat rubber fingertips • 1 x screw kit **Tip** Silicone fingertips must be mounted on fingertip holders (HND-TIP-HLD-KIT).	HND-TIP-SLC-KIT
V-Groove Fingertip Kit	• 2 x V-groove aluminum fingertips • 1 x screw kit **Tip** V-groove fingertips must be mounted on fingertip holders (HND-TIP-HLD-KIT).	HND-TIP-VGR-KIT
Hand-E Fingertips Holder Kit	• 2 x fingertips holder • 1 x screw kit	HND-TIP-HLD-KIT
Hand-E Fingertips Extender Kit	• 2 x fingertips extender • 1 x screw kit	HND-TIP-EXT-KIT
Wrist connection Kit for TM robot	• Robotiq Hand-E basic gripper unit • Hand-E Fingertip Starting Kit • I/O Coupling Kit	HND-TM-KIT-W
10m Device Cable	10 m Robotiq device cable for power and communication. Straight M12 5-pins female on one side, single ended on the other, shielded	CBL-COM-2065-10-HF
USB to RS485 adapter	USB to RS485 adapter, can be used with device cable for USB connection	ACC-ADT-USB-RS485
Hand-E Screw Kit	The screw kit contains: • 4 x M5 screws • 4 x tooth lock washers	HND-SCREW-KIT
End-Effector Coupling Kit	ISO 9409-1-50-4-M6 coupling for Adaptive Robot Grippers, with screws and tools for Gripper fixation and 1 m pigtail cable	GRP-CPL-062

To install Hand-E on a robot that has a different bolt pattern than part GRP-CPL-062 (ISO 9409-1-50-4-M6), you can use one of the following. The couplings and adapter plates listed below fit with both Hand-E and the 2-Finger Gripper.

Item	Description	Ordering Number
Blank coupling	Blank coupling for Adaptive Robot Grippers, with screws for Gripper fixation and 1 m pigtail cable	AGC-CPL-BLANK-002
Hand-E Wrist Connect Kit for Techman Robots	Gripper basic unit, I/O Coupling Kit for Techman Robots	HND-TM-KIT-W
ISO 9409-1-50-4-M6 coupling (cable-to-controller)	ISO 9409-1-50-4-M6 coupling for Robot Grippers with screws for Gripper fixation and 1 m pigtail cable	GRP-CPL-062
ISO 9409-1-31.5-4-M5 coupling	ISO 9409-1-31.5-4-M5 coupling for Adaptive Robot Grippers, with screws for Gripper fixation and 1 m pigtail cable	GRP-CPL-063
ISO 9409-1-40-4-M6 coupling	ISO 9409-1-40-4-M6 coupling for Adaptive Robot Grippers, with screws for Gripper fixation and 1 m pigtail cable	GRP-CPL-064
56-8M4-1D4 coupling	Coupling for 56 mm PCD[1] with (8) M4 and (1) 4mm dowel pin, with screws for Adaptive Robot Grippers fixation and 1 m pigtail cable	AGC-CPL-065-002
56-6M4-1D6 coupling	Coupling for 56 mm PCD[1] with (6) M4 and (1) 6mm dowel pin, with screws for Adaptive Robot Grippers fixation and 1 m pigtail cable	AGC-CPL-066-002
60-4Ø5-1D5 coupling	Coupling for 60 mmPCD[1] with (4) M5 thread and (1) 5mm dowel pin, with screws for Adaptive Robot Grippers fixation and 1 m pigtail cable	AGC-CPL-067-002
63-6M6-2D6 coupling	Coupling for 63 mm PCD[1] with (6) M6 and (2) 6mm dowel pins, with screws for Adaptive Robot Grippers fixation and 1 m pigtail cable	AGC-CPL-068-002
40-4M5-1D3 coupling	Coupling for 40 mm PCD[1] with (4) M5 and (1) 3mm dowel pins, with screws for Adaptive Robot Grippers fixation and 1 m pigtail cable	AGC-CPL-070-002
31.5-4M4 coupling	Coupling for 31.5 mm PCD[1] with (4) M4, with screws for Adaptive Robot Grippers fixation and 1 m pigtail cable	AGC-CPL-071-002
Adapter plate to 63-4M6-71-2D3	Wrist adapter plate for use with AGC-CPL-064-002. Interface to 63 mm PCD[1] with (4) M6 screws and 71 mm PCD[1] with (2) M3 dowel pins	AGC-APL-151-002

Item	Description	Ordering Number
Adapter plate to 63-4M6-61_4-2D6	Wrist adapter plate for use with AGC-CPL-064-002. Interface to 63 mm PCD[1] with (4) M6 screws and 61.4 mm PCD 1 with (2) M6 dowel pins	AGC-APL-152-002
Adapter plate to 80-6M8-2D82D8	Wrist adapter plate for use with AGC-CPL-064-002. Interface to 80 mm PCD[1] with (6) M8 screws and (2) M8 indexing pins	AGC-APL-153-002

[1]*Pitch Circle Diameter*

Tip

For legacy part replacement visit the documentation archives and the appropriate manual or consult your Robotiq distributor.

8. Troubleshooting

8.1. Using the Robotiq User Interface (RUI)

Use the Robotiq User Interface to check that your gripper functions properly:

1. Install the Robotiq User Interface on a computer.
2. Connect your gripper to a computer USB port.
3. Send instructions to your gripper via the Robotiq User Interface. If this fails, check that all cables are connected to your gripper and to your computer.
4. Contact support@robotiq.com.

> **Info**
>
> For details on the Robotiq User Interface, see its Instruction Manual, available on robotiq.com/support.

8.2. Troubleshooting TM Models

8.2.1. From TMFlow

1. Update your TMFlow operating system to the latest version.
2. Update your Hand-E TM Component to the latest version.
3. Use the Robotiq User Interface to check that your Hand-E communicates properly.
4. Contact support@robotiq.com.

9. Warranty and Patent

Robotiq warrants Hand-E against defects in material and workmanship for a period of one year from the date of reception when utilized as intended. Robotiq also warrants that this equipment will meet applicable specifications under normal use.

The warranty applies under the following conditions:

- Usage respects the operating and storage conditions specified in the **Environmental and Operating Conditions** section
- Proper installation of the Gripper specified in the **Installation** section and following subsections.
- Until one of these condition is reached:
  - 1 year
  - 5 000 000 cycle count[1]
- Usage respects maintenance specified in the **Maintenance** section.
- Usage respects recommended payload and forces specified in the **Mechanical Specifications** section.

---

[1]*Cycle count: One (1) cycle is defined as an object picking attempt, successful or not(open or closing onto an object, or closing on itself). It is calculated in the internal memory of the Hand-E Gripper.*

During the warranty period, Robotiq will repair or replace any defective Hand-E Gripper, as well as verify and adjust the Gripper free of charge if the equipment should need to be repaired or if the original adjustment is erroneous. If the equipment is sent back for verification during the warranty period and found to meet all published specifications, Robotiq will charge standard verification fees.

The unit is considered defective when at least one of the following conditions occurs:

- The Gripper fingers cannot close or open;
- The Gripper feedback necessary for the robot program is not accessible.

Parts that come into contact with the work piece and wearing parts such as the finger and fingertips are not covered by the warranty.

Caution

The warranty will become null and void if:

- The unit has been tampered with, repaired or worked on by unauthorized individuals.
- The warranty sticker has been removed (if present).
- The screws, other than as explained in this guide, have been removed.
- The unit has been opened other than as explained in this guide.
- Unit serial number has been altered, erased, or removed.
- Unit has been misused, neglected, or damaged by accident.

This warranty is in lieu of all other warranties expressed, implied, or statutory, including, but not limited to, the implied warranties of merchantability and fitness for a particular purpose. In no event shall Robotiq be liable for special, incidental, or consequential damages.

Robotiq shall not be liable for damages resulting from the use of the Hand-E, nor shall Robotiq be responsible for any failure in the performance of other items to which Hand-E is connected or the operation of any system of which the Gripper may be a part.

9.1 I/O Coupling Warranty

Robotiq warrants the I/O Coupling against defects in material and workmanship for a period of one year from the date of reception when utilized as intended. Robotiq also warrants that this equipment will meet applicable specifications under normal use.

Exclusions

This warranty excludes failure resulting from: improper use or installation, normal wear and tear, accident, abuse, neglect, fire, water, lightning or other acts of nature, causes external to the Gripper or other factors beyond Robotiq's control. It also excludes all consumable parts, such as fingertips and their normal wear.

Robotiq reserves the right to make changes in the design or construction of any of its products at any time without incurring any obligation to make any changes whatsoever on units already purchased.

10. Harmonized Standards, Declarations and Certificates

10.1. EC declaration of incorporation

ROBOTIQ

EC Declaration of Incorporation (Original)

In accordance with the EC Machinery Directive 2006/42/EC, Annex II, 1., Section B.

We, the manufacturer:

Robotiq Inc.
966 Chemin Olivier, Suite 500
Lévis, Québec, Canada, G7A 2N1

hereby declares, under sole responsibility, that the product:

Hand-E / Hand-E Gripper
All serial number
(and accessories)

complies with the following essential requirements of the European Directive 2006/42/EC on machinery:

1.1.2, 1.1.3, 1.1.5, 1.3.2, 1.3.3, 1.3.4, 1.5.1, 1.5.2, 1.5.3, 1.5.4, 1.5.8, 1.5.10, 1.5.11, 1.7.2.

The product is considered as partly completed machinery and has been evaluated in accordance with the following harmonised standards:

- *EN ISO 12100:2010*

The product must not be put into service until the final machinery into which it is to be incorporated has been declared in conformity with the provisions of the Directive 2006/42/EC, including amendments.

The manufacturer declares that the product complies with the following European Directives and harmonised standards:

- **2014/30/EU (EMC Directive)**
  - *EN 61000-6-2:2016*
  - *EN 61000-6-4:2007 + A1:2011*
- **2011/65/EU + 2015/863 (RoHS Directive)**
  - *EN 50581:2012*
- **2012/19/EU (WEEE Directive)**
  - *EN 50419:2005.*

The manufacturer also declares the use of these other technical standards, as far as applicable:

ISO 9409-1:2004
ISO 14539:2000.

Name and address of the person authorised to compile the relevant technical documentation:

Nicolas Tremblay, CEP, see manufacturer address.

The relevant technical documentation is compiled in accordance with part B of Annex VII of Directive 2006/42/EC and will be presented electronically by the manufacturer to competent national authorities, if required with a substantiated reason.

Signed in Lévis on November 7th, 2019

Louis-Alexis Allen Demers, ing., Eng., Ph. D.
Hardware Director

10.2. Applied standards

This section describes all applied harmonized standards for the design and production of the Robotiq Hand-E Gripper. Standards are applied were applicable, some points may not be applied if not applicable to this specific product. Conformity is not enforced by any laws, it is self-applied and the aim is to define normal safety and performance requirements for similar products.

> **Caution**
>
> Conformity of the product is only met if all instructions of this manual are followed. Among others: installation, safety measures and normal usage must be met.

The following standards have been applied:

- EN ISO 12100:2010 (Safety of machinery — General principles for design — Risk assessment and risk reduction)
- 2014/30/EU (EMC Directive)
  - EN 61000-6-2:2016
  - EN 61000-6-4:2007 + A1:2011
- 2011/65/EU + 2015/863 (RoHS Directive)
  - EN 50581:2012
- 2012/19/EU (WEEE Directive)
  - EN 50419:2005
- ISO 9409-1:2004 (Manipulating industrial robots — Mechanical interfaces — Part 1: Plates)
- ISO 14539:2000 (Manipulating industrial robots — Object handling with grasp-type grippers — Vocabulary and presentation of characteristics)

10.3. Ingress Protection Certificate

October 12th 2018

Purpose: Ingress Protection (IP67) – Hand-E Test Certificate

To whom it may concern,

This certificate is to attest that Ingress Protection (IP) tests were carried out by NTS Canada in the months of June and July 2018 on Hand-E units manufactured by Robotiq. No ingress of dust or water was observed inside the units after the tests. No insertion of the rod or induced damage was observed. No functional anomaly was noticed or reported by the Robotiq engineering representative on-site during the tests. This test certificate does not supersedes the test report FTR0201898 Rev 00 issued by NTS Canada.

The acceptance status for the units tested is "PASS" for the following tests;

- Ingress protection against access to hazardous parts – Rod (code IP6X)
- Ingress protection against solid foreign objects - Dust (code IP6X)
- Ingress protection against immersion in water (code IPX7)

Sincerely yours,

Jean-Pierre Rioux

Digitally signed by Jean-Pierre Rioux
DN: cn=Jean-Pierre Rioux, o, ou=NTS Canada Inc., email=Jean-Pierre.Rioux@NTS.com, c=CA
Date: 2018.10.12 11:31:11 -04'00'

Jean-Pierre Rioux, P. Eng.
Lab Manager
National Technical Systems Canada inc.
2425 Industrial Blvd
Chambly, Quebec
J3L 4W3 Canada

11. License Agreement

END-USER LICENSE AGREEMENT

YOU SHOULD CAREFULLY READ THE FOLLOWING AGREEMENT BEFORE USING THE Software (as this term is hereinafter defined). Using the Software indicates your acceptance of the agreement. If you do not agree with it, you are not authorized to use the Software.

IMPORTANT-READ CAREFULLY: This End-User License Agreement (the " Agreement") is a legal agreement between you and the Licensor (as this term is hereinafter defined), the licensor of the Software. This Agreement covers the Software. The Software includes any " on-line" or electronic documentation and all modifications and upgrades related thereto. By installing, or otherwise using the Software, you agree to be bound by the terms of this Agreement. If you do not agree to the terms of this Agreement, the Licensor cannot and does not license the Software to you. In such event, you must not use or install the Software.

1. Definition.
    1. " TM" means Techman Robot, a corporation incorporated under the laws of Taiwan, having its registered office at 4F, 188 Wenhua 2nd Rd., Guishan Dist.Taoyuan City, 33383, Taiwan, which specializes into the conception, advanced manufacturing and sale of robotic products;
    2. " OMRON" is a corporation incorporated under the laws of Japan, having its registered office at Horikawa Higashiiru, Shiokoji-Dori, Shimogyo-Ku, Kyoto, 600-8530, Japan, which specializes into the conception, advanced manufacturing and sale of automation components;
    3. The term ''OMRON-TM'' is used to refer to both Techman Robot and Omron-TM Series Robot;
    4. " Software" means any of the Licensor's softwares provided to its customers for the purposes mentioned in Sub-section 1.6 hereof including their modifications and upgrades and their related materials;
    5. " Licensor" means Robotiq inc., a corporation incorporated under the laws of Quebec, having its registered office at 500-966 chemin Olivier, Lévis, Québec, Canada, G7A 2N1, which specializes into the conception, advanced manufacturing and sale of robotic products (the " Licensor's Business");
    6. " End-User" means a customer authorized pursuant to this Agreement to install or use the Software in order to make a specific product from the Licensor's Products compatible and functional with a specific product of the Omron-TM's collaborative robots ;
    7. " Licensor's Products" means those products developed by the Licensor in the course of the Licensor's Business;
    8. " Omron-TM's collaborative robots" means those products which are collaborative robots and are developed by Omron-TM in the course of the Omron-TM's Business;
    9. " Licensor's Authorized Representatives" means and includes the Licensor and Licensor's authorized vendors, resellers, distributors and licensors;
    10. " Purchase Agreement" means an agreement between the End-User and the Licensor pursuant to which the End-User purchased one or more of the Licensor's Products.

1. License. Subject to the terms and conditions hereof, the Licensor grants to the End-User a personal, temporary, non-exclusive, non-assignable and non-transferable and revocable license to use the Software in accordance with the terms and conditions hereof.
2. Software and Documentation. The Licensor may provide, if applicable, all documentation containing the detailed specifications for operation and use of the Software, which Software shall be used in accordance with such documentation. This documentation, if applicable, will be provided, wholly or in part, within (i) this Agreement, (ii) the Licensor's Web site http://robotiq.com/ (iii) the Licensor's Products and the Purchase Agreement therewith, or (iv) any other agreement,

document, support, whatsoever decided by the Licensor.

The use of the Software requires the Licensor's Products, Omron-TM's collaborative robots, compatible systems and certain software (which may require some expenses), may require periodical updating and may be affected by such elements. Most equipment will be compatible with the Software. However, the Software may not function on certain types of equipment.

3. Modifications and Upgrades. The Licensor shall be under no obligation to provide any upgrade or modification to the Software. However, the End-User shall be entitled to receive free of charge all modifications and upgrades of the Software provided by the Licensor if, at such time, the End-User is not in default in respect of any of its obligation contained herein. Such modifications and upgrades of the Software shall be installed by the End-User itself by consulting the Licensor's Website http://robotiq.com/ where a link to proceed to such installation will be made available thereof. A new version of the Software shall not be covered by this Section 4 but shall require that a new End-User Software License Agreement be entered into between the Licensor and the End-User.

4. Fees. The grant by Licensor to the End-User of the present license shall be free to the extent that the End-User agrees and complies to the term and conditions herein at all time.

5. Maintenance. During the term of this Agreement, the Licensor will maintain the Software in an operable condition and will make available any corrections and improvements as are generally incorporated in the Software by the Licensor without additional charge to the End-User. The Licensor may temporarily and without notice suspend or limit access to the Software if necessary or desirable in order to maintain, restore, modify or repair any part of the Software or for any reason related to business. During such works, the Software will not be available but the Licensor undertakes to deploy its best efforts to perform such works at appropriate times and to limit any inconvenience arising therefrom.

6. Title to Software. The licensed Software is composed of confidential data and trade secrets and is proprietary to and constitutes trade secret information and intellectual property of the Licensor. Title and ownership rights to the Software, including the intellectual property rights related thereto, shall remain with the Licensor. The End-User agrees to maintain the confidential nature of the Software and related materials provided for the End-User's own internal use under this Agreement. The license granted herein does not include the right to sublicense to others, and may not be assigned to others, in whole or in part, without the prior written consent of the Licensor. The End-User may not or allow others to modify or prepare directive works, copy (except for normal backups for recovery purposes), reproduce, republish, reverse engineer, upload, post, transmit, or distribute, in any manner, the Software.

7. Restricted Use. The Software shall be used solely and exclusively by the End-User and its employees for the purpose mentioned in Sub-section 1.4 hereof. Any other use of the Software, including resell derivative modifications or extensions, is expressly prohibited.

8. Exclusion of Warranty on Software. The End-User expressly acknowledges and agrees that use of the Software is at the End-User sole risk. The Software is provided " AS IS" and without warranty of any kind. THE LICENSOR AND THE LICENSOR'S AUTHORIZED REPRESEN-TATIVES DO NOT WARRANT THAT Software WILL BE FREE OF ERRORS AND YOU ACKNOWLEDGE THAT THE EXISTENCE OF ANY SUCH ERRORS DOES NOT CONSTITUTE A BREACH OF THIS AGREEMENT. TO THE EXTENT PERMITTED BY LAW LICENSOR AND LICENSOR'S AUTHORIZED REPRESEN-TATIVES EXPRESSLY DISCLAIM ALL WARRANTIES, EXPRESS OR IMPLIED, INCLUDING , BUT NOT LIMITED TO, THE IMPLIED WARRANTIES OF MERCHANTA-BILITY AND FITNESS FOR A PARTICULAR PURPOSE UNLESS OTHERWISE STATED HEREIN. LICENSOR AND LICENSOR'S AUTHORIZED REPRESENTATIVES DO NOT WARRANT THAT THE FUNCTIONS CONTAINED IN THE Software WILL MEET THE END-USER REQUIREMENTS OR THAT THE OPERATION OF THE Software WILL BE CORRECT. FURTHERMORE, LICENSOR AND LICENSOR'S AUTHORIZED REPRESEN-TATIVES DO NOT WARRANT OR MAKE ANY REPRESENTATIONS REGARDING THE USE OR THE RESULTS OF THE USE OF THE Software IN TERMS OF ITS CORRECTNESS, ACCURACY, RELIABILITY, OR OTHERWISE. NO ORAL OR WRITTEN INFORMATION OR ADVICE GIVEN BY LICENSOR AND LICENSOR'S AUTHORIZED REPRESENTATIVE SHALL CREATE A WARRANTY OR IN ANY WAY INCREASE THE SCOPE OF THIS WARRANTY. SHOULD THE Software PROVE DEFECTIVE IN YOUR TECHNOLOGY ENVIRONMENT, YOU ASSUME THE ENTIRE COST OF ALL NECESSARY SERVICING, REPAIR OR CORRECTION TO YOUR OWN TECHNOLOGY ENVIRONMENT.

9. Limitation of liability. TO THE MAXIMUM EXTENT PERMITTED BY LAW, LICENSOR AND LICENSOR'S AUTHORIZED REPRESENTATIVES SHALL NOT BE LIABLE FOR ANY INCIDENTAL OR CONSEQUENTIAL DAMAGES FOR BREACH OF ANY EXPRESS OR IMPLIED WARRANTY, BREACH OF CONTRACT, NEGLIGENCE, STRICT LIABILITY OR ANY OTHER LEGAL THEORY RELATED TO THE Software. SUCH DAMAGES INCLUDE, BUT ARE NOT LIMITED TO, LOSS OF PROFITS, LOSS OF REVENUE, LOSS OF DATA, LOSS OF USE OF THE PRODUCT OR ANY ASSOCIATED EQUIPMENT, DOWN TIME AND USER'S TIME, EVEN IF THE LICENSOR HAS BEEN ADVISED OF THE POSSIBILITY OF SUCH DAMAGES. IN ANY

CASE, LICENSOR ENTIRE LIABILITY UNDER ANY PROVISION OF THIS AGREEMENT SHALL BE LIMITED TO THE AMOUNT ACTUALLY PAID IN RESPECT OF THE LICENSOR'S PRODUCTS PURCHASED BY THE END-USER PURSUANT TO A PURCHASE AGREEMENT.

10. Training, Maintenance and Support There is no entitlement to training, maintenance and support under this license unless otherwise specified in the Purchase Agreement or any other written agreement between the End-User and the Licensor. The End-User may provide the Licensor with details regarding any bug, defect or failure in the Software promptly and with no delay from such event; the End-User shall comply with the Licensor's request for information regarding bugs, defects or failures and furnish him with information, screenshots and try to reproduce such bugs, defects or failures upon Licensor's demand.

11. Expiration and Termination. The Licensor may terminate this Agreement for default by the End-User. This Agreement will also be automatically terminated upon the election of such by the Licensor or the official launch of the Software, whichever event comes first. Upon termination of this Agreement for any reason, the End-User shall promptly uninstall the Software on any Omron-TM's collaborative robots and Licensor's Products, computer, or server on which it has been installed, deliver to the Licensor all CDs, DVDs, magnetic tapes, cards, and other tangible items and materials embodying the Software, and return to the Licensor all copies thereof or destroy such copies and warrant in writing that all copies thereof have been destroyed. In the event of termination of this Agreement, all obligations of the parties under this Agreement due for performance on the date of termination shall survive the termination, and the party terminating shall not be liable to the other party for any damages arising out of the termination.

12. Miscellaneous.
    a. This Agreement constitutes the entire understanding and agreement between the Licensor and the End-User and replaces any prior agreement relating to the same subject matter.

    b. This Agreement shall be governed and construed in accordance with the laws of the province of Quebec and the federal laws of Canada applicable therein. Any legal action or proceeding between the Licensor and the End-User for any purpose concerning this Agreement or the parties' obligations hereunder shall be brought exclusively in a court of competent jurisdiction sitting in the judicial district of Trois-Rivières, Quebec.

    c. The Licensor's failure to insist upon or enforce strict performance of any provision of this Agreement shall not be construed as a waiver of any provision or right. Neither the course of conduct between the parties nor trade practice shall act to modify any provision of this Agreement.

    d. The Licensor may assign its rights and duties under this Agreement to any party at any time without notice to the End-User. The End-User may not assign this Agreement without the prior written consent of the Licensor.

    e. If any part of this Agreement is null, illegal or non-enforceable, this Agreement shall be interpreted as if this part was never part of this Agreement.

    f. The provisions of this Agreement are for the benefit of the Licensor and its officers, directors, employees, agents, licensors and suppliers. Each of these individuals or entities shall have the right to assert and enforce those provisions directly against the End-User on its own behalf. This Agreement is also for the benefit of, and binds, the End-User and its heirs, successors, legal representatives and permitted assigns.

    g. Any rights not expressly granted herein are reserved.

    h. The parties confirm that they have agreed that this Agreement and all related documents be drafted in English only. Les parties aux présentes confirment qu'elles ont accepté que la présente convention et tous les documents y afférents soient rédigés en anglais seulement.

12. Contact

www.robotiq.com

Contact Us

Phone

1-888-ROBOTIQ (762-6847)
(+1) 418-380-2788 Outside US and Canada

Technical support

Extension 3

Sales

Extension 2

Head office

Robotiq
966 chemin Olivier
Suite 500
Lévis, Québec
G7A 2N1
Canada

Where automation Pros come to share their know-how and get answers.

dof.robotiq.com