OfficeSource FURNITURE

ASSEMBLY INSTRUCTIONS

MODEL NO. 11871

1

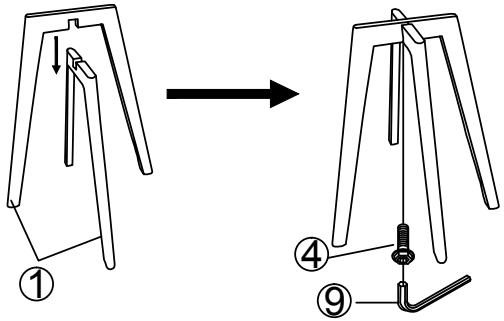

3

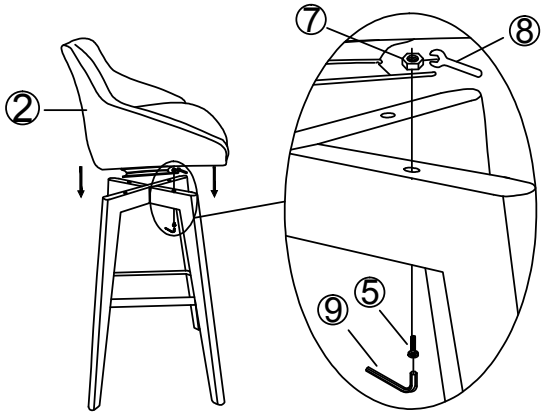

2

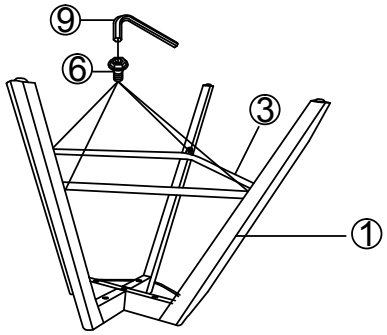

4

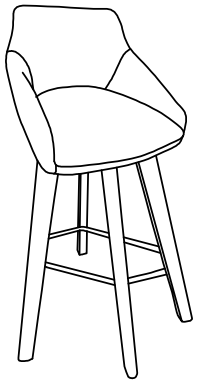

① WOOD LEG	② SEAT&BACK CUSHION	③ IRON RING	④ SCREW	⑤ SCREW	⑥ SCREW	⑦ NUT	⑧ WRENCH	⑨ ALLEN KEY
			1/4"*1-1/4"	M8*40	1/4"*1/2"	M8		
2 PCS	1 PC	1 PC	1 PC	4 PCS	4 PCS	4 PCS	1 PC	1 PC