REVISED 6-28-68 / 12-6-68 /

EFFECTIVE JAN. 1, 1968

CHECKER MOTORS CORP. KALAMAZOO, MICH.

MODEL: A-11, A-11E, A-12 A-12W, A-12W6 & 8	DATE 6/26/67	GRAPHIC ILLUSTRATION SEAT BELTS-REAR SEAT	DWN. KING 6/26 CHKD. DE 1-18-68 APPVD.	SHEET NO. 709
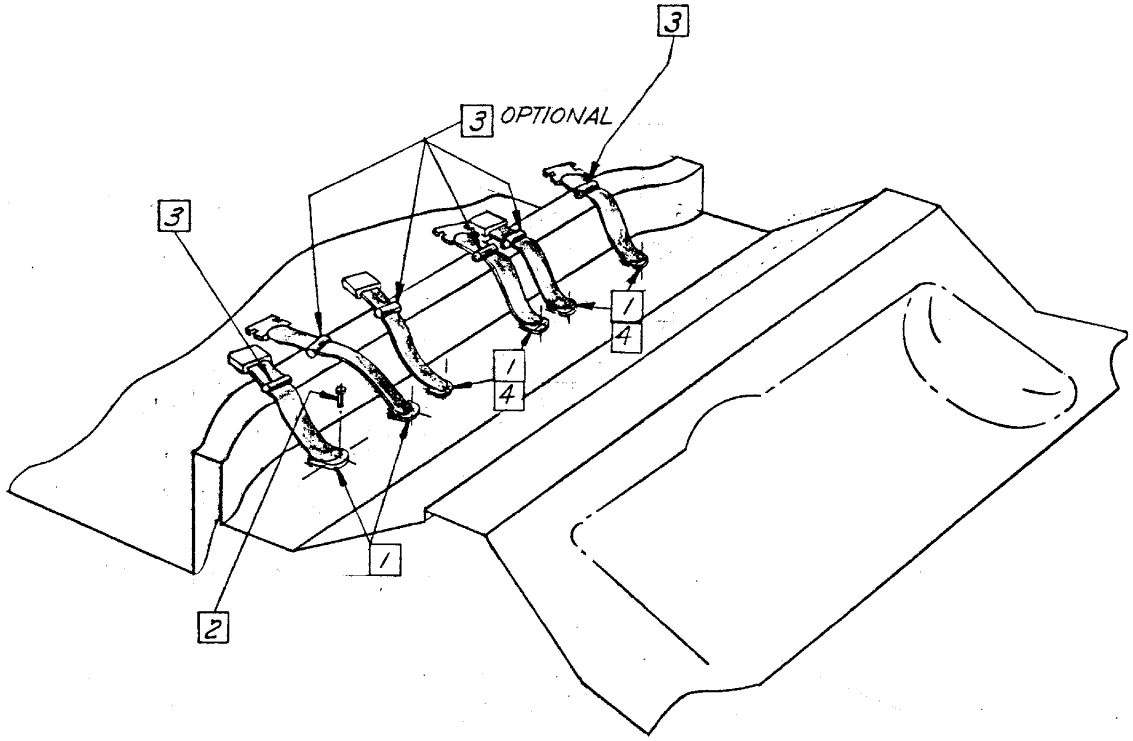
1. - 645800 - BELT ASSEM., REAR SEAT, 3 REQD.
2. - 644301 - BOLT, SEAT BELT ANCHOR SHORT, 6 REQD.
3. - 643051 - RETRACTOR ASSEM., 2 REQD (A-11-REAR SEAT FORWARD & A-12W, OPTIONAL ON A-11, A-11E, A-12, A-12W6 & 8)
4 - 645799 - BELT ASSEM., 3 REQ,D. -(A-12W6 & 8 ONLY - OPTIONAL)