REVISED 3-6-68 / 7-1-68

EFFECTIVE JAN. 1, 1968

CHECKER MOTORS CORP., KALAMAZOO, MICH.

MODEL B-11 CHASSIS	DATE	GRAPHIC ILLUSTRATION	DWN.- [illegible]	SHEET NO. 487
ALSO APPLIES TO B11E B-12 B-12W B-12E B-12WE	2-29-68	ELECTRICAL BATTERY CABLE - FRONT & REAR MTD. AND SOLENOID SWITCH WIRING	CHK.- [illegible] APP'D.-	

1. 701231 - CABLE ASSEM. - B11 ONLY
2. 95278 - STRAP ASSEM.
3. 181637 - BOLT
4. 178551 - L.W. (3)
5. 120369 - NUT
6. 94719 - INSULATOR } TO TRUNK FLOOR
7. 162009 - SCREW (3) }
8. 702221 - CLIP (6)
9. 448665 - SCREW (3)
10. 626543 - SCR. & L.W. ASSEM.
11. 120380 - L.W.
12. 120375 - NUT
13. 80345 - CLAMP (2)
14. INSPECT CABLE TO EXHAUST PIPE CLEARANCE
15. ATTACH TO WHEEL HOUSE PANEL
16. SOLENOID WIRING SAME AS FRONT MTD. BATT.
17. REF. - EXH. PIPE HANGER BRKT.
18. 701300 CABLE ASSEM - B11E ONLY
19. 181595 - BOLT 5/16-24 × 3/4 HEX. HD.
20. 120368 - NUT 5/16-24 HEX.
21. 120214 - L.W. 5/16 MED. SPRING
22. 636909 - LOOM - 6" LONG

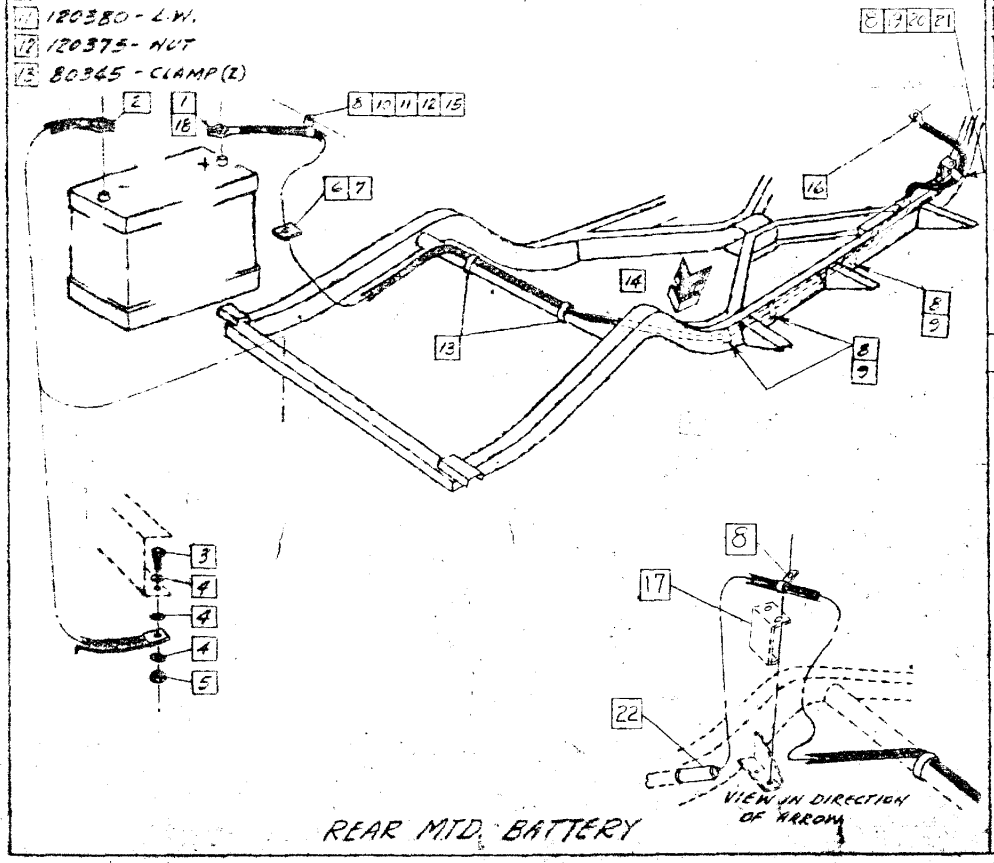

REAR MTD. BATTERY

1. 93892 - CABLE ASSEM
2. 178551 - L.W. (2) 6 CYL ONLY - (w/o A/C)
3. 122104 - BOLT 6 CYL ONLY - (w/o A/C)
4. 701261 - CABLE ASSEM.
5.
6.
7. PART OF HARNESS 703430
8. FURN. WITH STARTER
9. 120382 L.W.
10. 120377 NUT
11. 138479 L.W. (2)
12. 120614 NUT
13. 120622 NUT
14. 95284 STRAP - ENGINE GROUND
15. SEE SHEET 584
16. STARTING MOTOR - SEE G.I. [illegible]
17.
18.

CHANGE'S	
1-27-69	448665 WAS 171104
	703430 WAS 701640

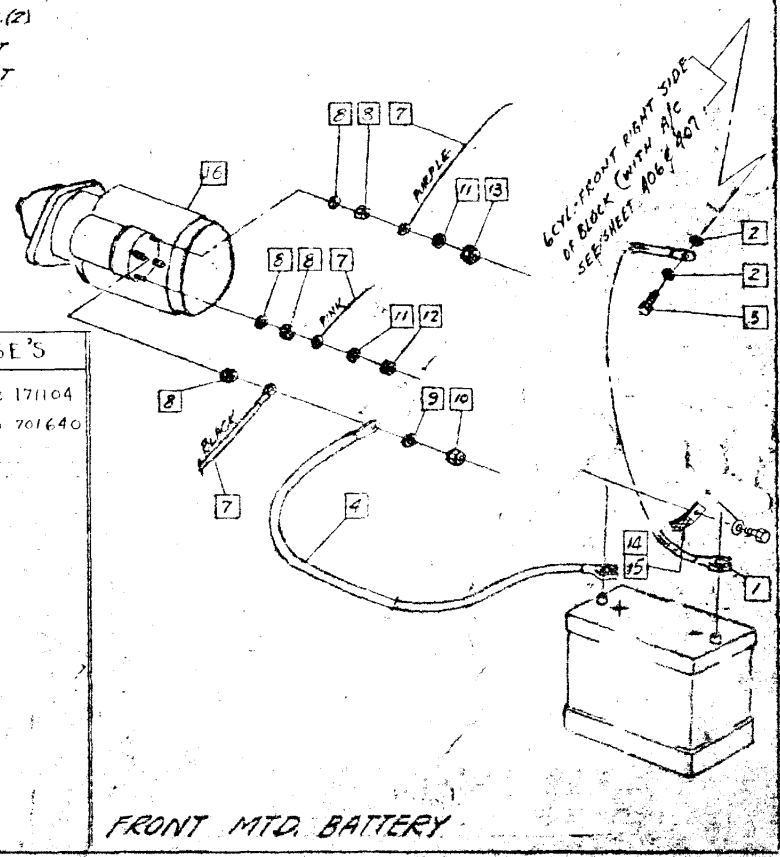

FRONT MTD. BATTERY