REVISED: 5-12-64 / 6-10-64 / 11-6-64 (RGF) / 4-13-65 (J.K.) / 9-28-65 (J.K.) / 3-10-66 (JK) / 7-29-66 (JK) / 8-12-66 (K.O.)

CHECKER MOTORS CORP., KALAMAZOO, MICH.

MODEL	B-11 CHASSIS	DATE	GRAPHIC ILLUSTRATION	DWN: KERNEY	SHEET NO. 407
ALSO APPLIES TO	B-12 B-12W B-12E	4-15-64	AIR COND. WITH POWER STEERING - 6 CYL.	CHK: APPVD:	

1 702244 - PULLEY - C.S.
2 702215 - PULLEY - W.P.
3 702326 - SPACER
4 701224 - FAN ASSEM.
5 701263 - BRKT. ASSEM.
6 702320 - BRACE
7 454904 - BOLT (4)
8 186679 - BOLT
9 120382 - L.W. (14)
10 702223 - BRACE
11 454922 - BOLT (2)
12 701733 - PULLEY - W.P. - REF.
13 120369 - NUT
14 701264 - SUPPT. ASSEM.
15 186678 - BOLT (4)
16 702372 - BRKT.
17 442828 - LOCK NUT (2)
18 120394 - WASHER (3)
19 701080 - IGN. COIL - REF.
20 97639 - PULLEY ASSEM.
21 120388 - WASHER
22 120383 - L.W.
23 271501 - NUT
24 702159 - BELT
25 702370 - SPACER
26 454906 - BOLT (2)
27 702168 - PULLEY - P.S. - REF.
28
29
30 181629 - BOLT (3) - REF.
31 97666 - COMPR. ASSEM.
32 701228 - CLUTCH ASSEM.
33 454889 - BOLT (4) - REF.
34 120214 - L.W. (4) - REF.
35 HARMONIC BALANCER - REF.
36
37 701267 TUBE ASSEM. OTHERWISE SAME AS SHEET #225
38 BATTERY GR. CABLE HERE WITH A/C (REF. - SEE SHEET 230-C)
39 178551 - L.W. (2)

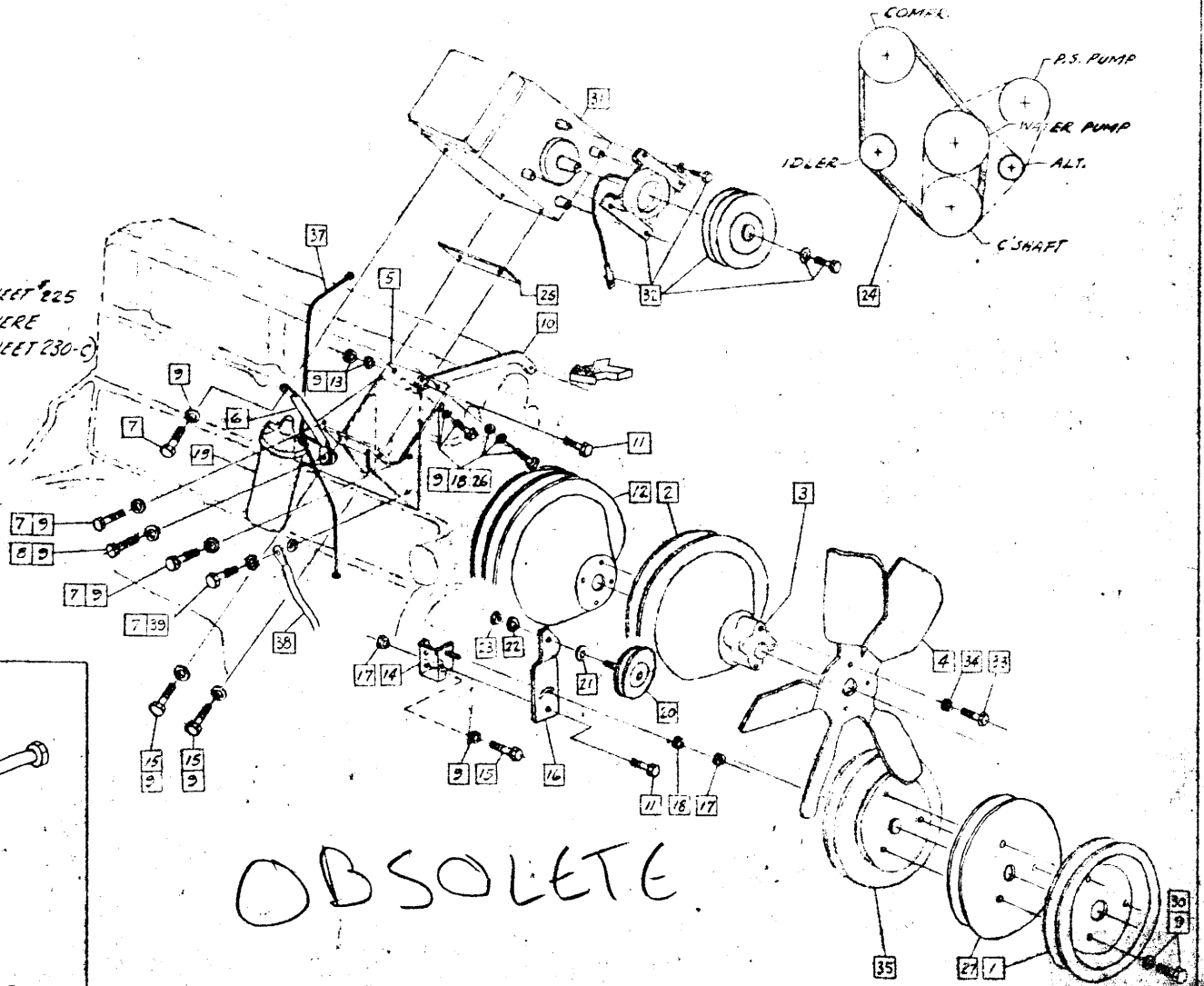

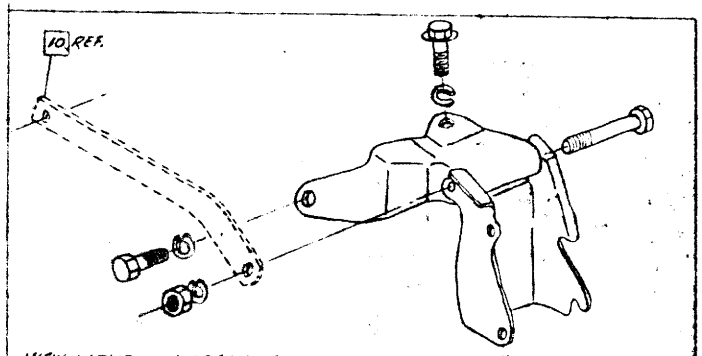

VIEW IN DIRECTION OF ARROW - REF. - SEE SHEET #207

(1) ADDL. COPY - B. SUTHERLAND