REVISED: 5-4-65 / 5-13-65 / 8-12-66 / 3-20-67

CHECKER MOTORS CORP., KALAMAZOO, MICH.

MODEL	B-11 B-12 B-12W B-12E B-12W6 B-12W8	DATE	GRAPHIC ILLUSTRATION	CHECKED BY GRO 7-13-64	SHEET NO. 485
	CHASSIS	7-14-64	BATTERY INSTALLATION	APPROVED	

			FRONT	REAR
1	701892	SUPPORT ASSEM.	1	
2	120393	L.W.	4	
3	181666	BOLT	4	
4	95027	HOLD-DOWN		1
5	94489	ROD	1	2
6	120365	NUT	3	2
7	446363	WASHER	2	2
8	103373	COTTER PIN	2	2
9	70196	BOLT		1
10	80526	SHIM		1
11	446477	WASHER		2
12	124824	NUT		2
13	701520-50A. 97478-75A. 93235-80A. 95370-90A. 97456-90A.	BATTERY	1	1
14	702679-50A. 94670-75A 94555-80A 94555-90A	CLEAT	2	
15	95283	TRAY ASSEM.		1
16	94716	STRIP		1
17	120376	NUT		4
18	120393	WASHER		2
19	120214	L.W.		4
20	94722	PAD		1
21	94702	GROMMET		1
22	704059	HOLD-DOWN ROD	1	
23	701909	H.D. ASSEM.	1	
24	626492	NEW-SEALER ASSEM.	1	
25	626625	WASHER-RUBBER	1	

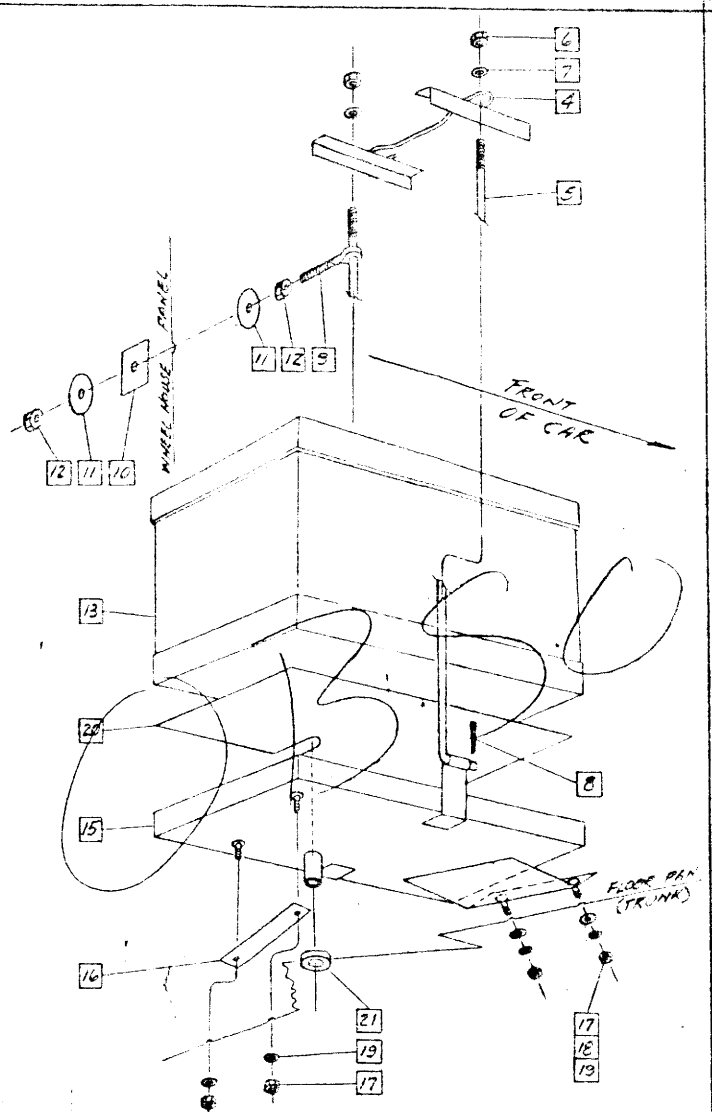

REAR MOUNTED

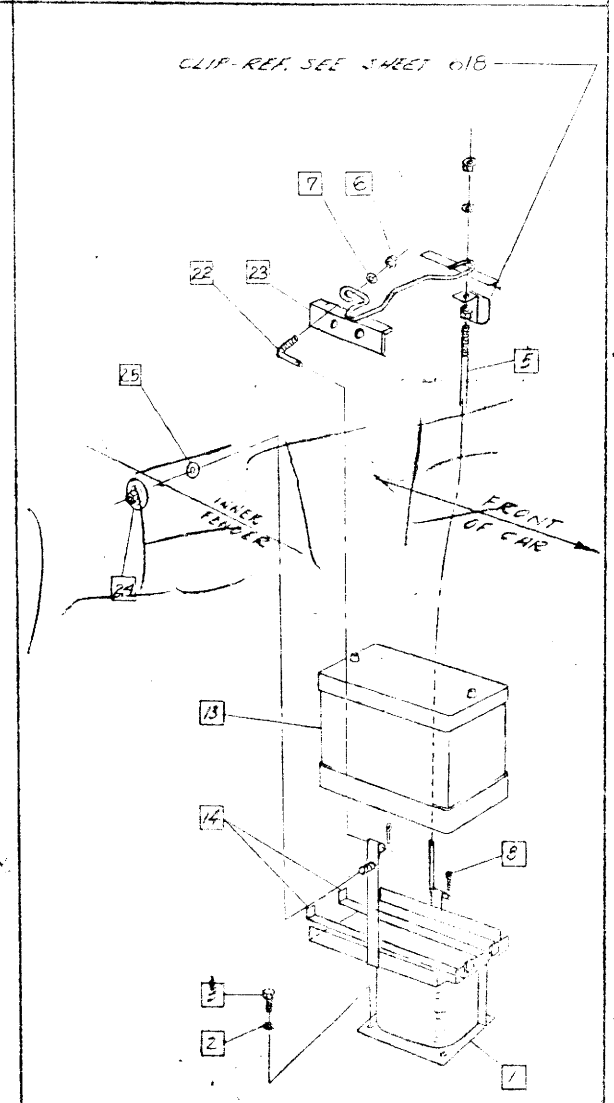

FRONT MOUNTED