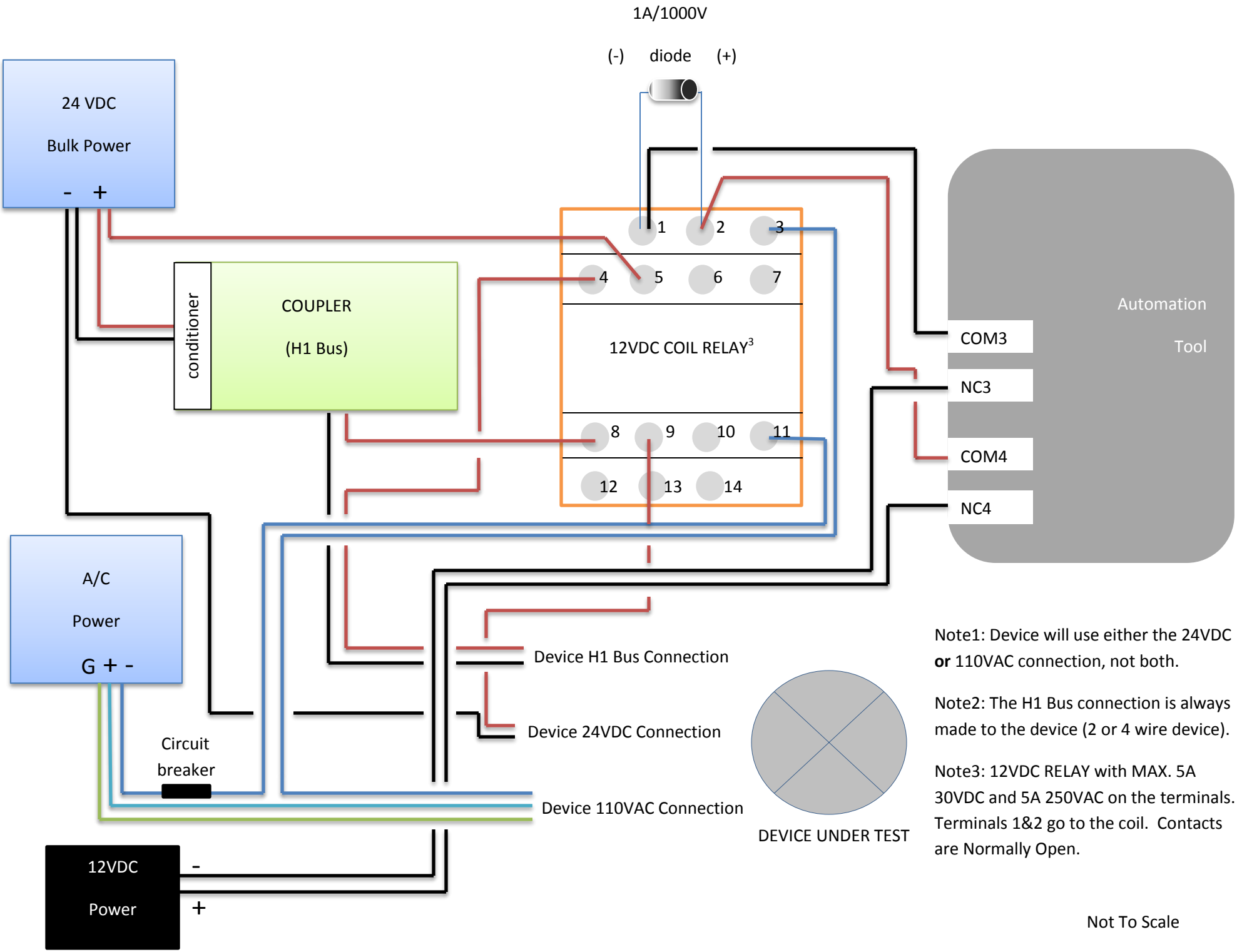
1A/1000V
(-) diode (+)
24 VDC
Bulk Power
- +
conditioner
COUPLER
(H1 Bus)
1
2
3
4
5
6
7
12VDC COIL RELAY3
8
9
10
11
12
13
14
Automation
Tool
COM3
NC3
COM4
NC4
A/C
Power
G + -
Circuit
breaker
Device H1 Bus Connection
Device 24VDC Connection
Device 110VAC Connection
DEVICE UNDER TEST
12VDC
Power
-
+
Note1: Device will use either the 24VDC **or** 110VAC connection, not both.
Note2: The H1 Bus connection is always made to the device (2 or 4 wire device).
Note3: 12VDC RELAY with MAX. 5A 30VDC and 5A 250VAC on the terminals. Terminals 1&2 go to the coil. Contacts are Normally Open.
Not To Scale