Immobilisation with Driver ID
Wiring Diagram

Device requires Driver ID to be scanned
before starter motor can start.

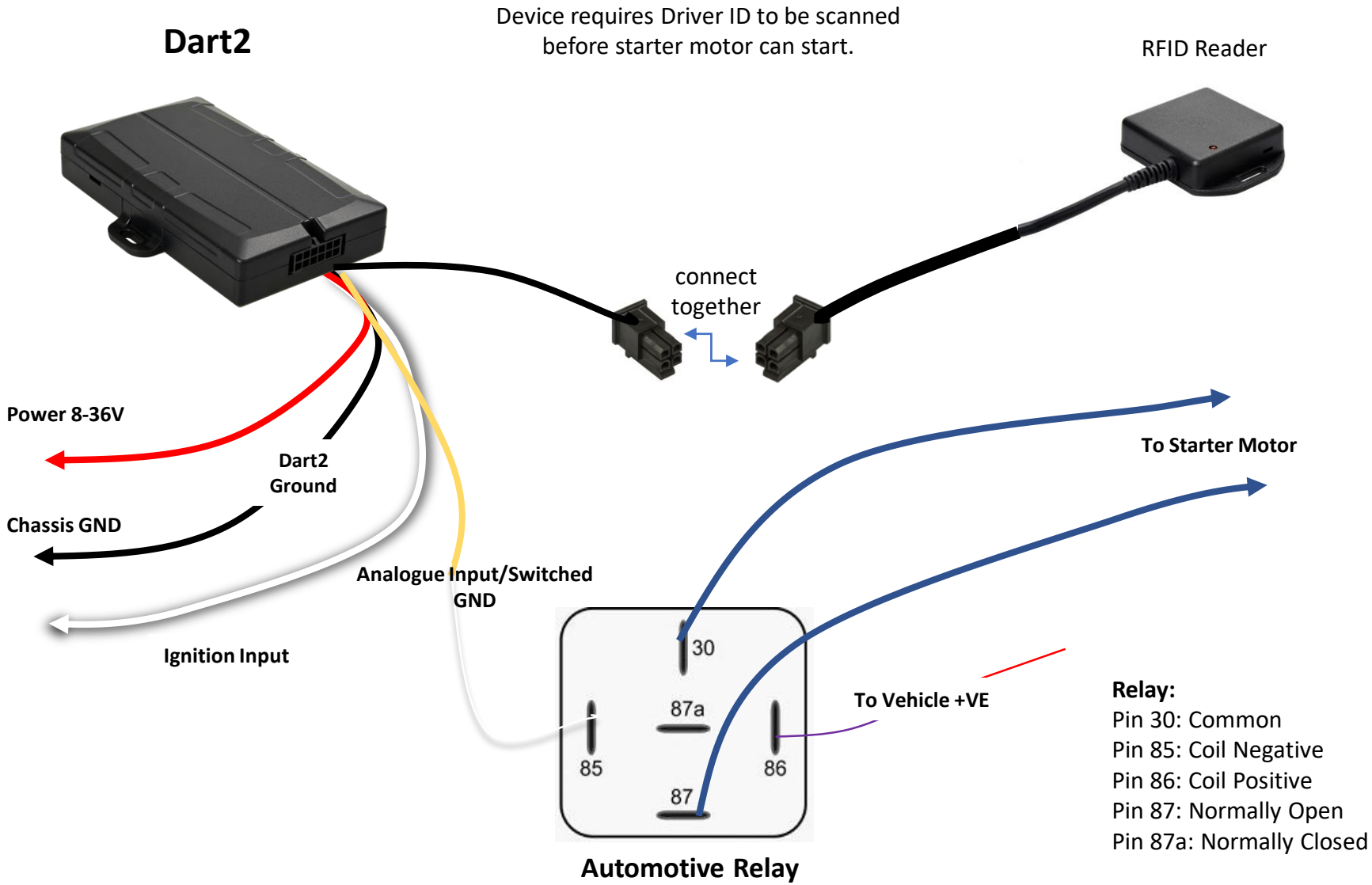

Relay:
Pin 30: Common
Pin 85: Coil Negative
Pin 86: Coil Positive
Pin 87: Normally Open
Pin 87a: Normally Closed