StoneWall Kit with Tilt and Turn Window Installation

ALERT: BEFORE STARTING AN EGRESS WINDOW KIT INTALLATION, CONTACT LOCAL MUNICIPALITY FOR PERMITS. CALL 811 SERVICE TO FIND UNDERGROUND WATER LINES AND OTHER UTILITIES FOR SAFE DIGGING.

PRINT THESE INSTRUCTIONS AND FOLLOW THEM AS YOU INSTALL YOUR KIT.

Excavate area for window well installation. Set the Well on the ground where the Well will be installed. Mark the shape of the well on the ground. Make another line that is roughly 12" further out, all the way around the Well. You want to over dig the hole by about a foot all the way around the Window Well. This leaves space for backfilling with pea gravel/crushed stone afterwards. Remove all the dirt from this marked out area to the depth of your Window Well.

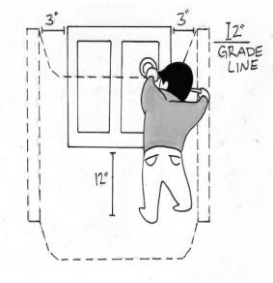

Find the Window Well size from your original order. Take that width measurement and mark two plumb (vertical) lines on the foundation wall. Center these lines with the window opening in the foundation. They should be at least 3" past on each side of the window opening. This is the inside width of the Window Well.

How to Install Tilt and Turn Egress Window

Step 1: Install handle – swivel the handle cap to the side to access the mounting screws. Set the handle in place and drive the two screws to attach the handle. Now you will be able to tilt or open the window.




Tip 1: Taking the sash out of window frame makes it lighter and easier to install the frame of the window into the opening. Remove the hinge caps. Take out the pin from top hinge. Lift the sash out of the frame.





Step 2: Mark the middle of the frame, 6” down from the top and 6” up from the bottom. Mark a third spot in the middle, mid-way from top, and bottom. Do this to both sides of the frame. Predrill these 6 marked spots to give you 3 mounting holes per side of the frame.




Step 3: Using the chart below, select the correct rough opening size for the window you have.

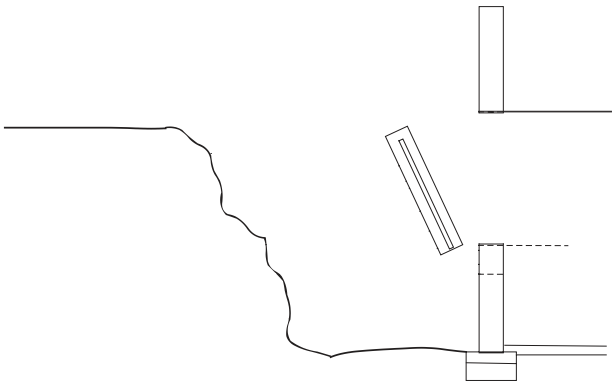

Cut and remove that size piece of foundation from the foundation wall. Remove that slab from the hole. This may require breaking this slab up into smaller pieces since it is heavy. Note: do not bury this slab or its pieces in the window well area. It must be removed for proper drainage.

Using pressure treated lumber, build a frame for the window to sit in. Secure the wood using PL Premium Construction Adhesive and appropriate concrete fasteners to secure the lumber properly. This should leave approximately 1/8" all the way around the window frame. This allows for any minor adjustments needed for an openings that are not perfectly level, plumb or square.

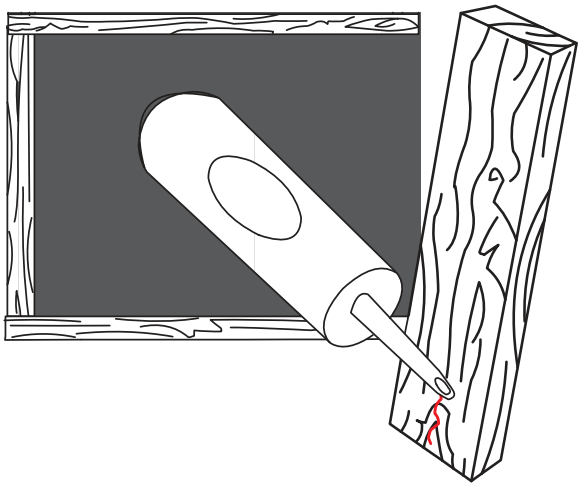

Manufacturers Recommended Rough Opening Sizes: European Tilt & Turn Window.

Window Size	Recommended Rough Opening Size
28" wide X 46" high	31 1/2" wide X 49 ½" high
31" wide X 41" high	34 ½" wide X 44 ½" high
36" wide X 36" high	39 ½" wide X 39 ½" high
28" wide X 52" high	31 ½" wide X 55 ½" high
27 3/8" wide X 46" high	30 7/8" wide x 49 ½" high
29 3/8" wide X 47 ½" high	32 7/8" wide X 51" high
31 3/8" wide X 47 ½" high	34 7/8" wide X 51" high

Step 4: Set the Window Frame into the wooden window buck. Use shims to temporarily set the frame so that it is level, plumb and square in the window buck. Use the 6 predrilled holes to screw through the frame and into the wooden buck to attach the window frame. Double checking that it is still level, plumb and square when done.

Step 5: Re-set sash into the window frame. Putting the pin back into that top hinge. Check that the sash level.

Tip 2: If the sash is not level, find adjustment screws on the hinges and adjust until sash is leveled. Upper hinge set screw: adjusts the (first image, shown upside down) up and down. Lower hinge set screws: adjusts left and right.





Step 6: Check the proper fit by opening and closing the window and tilting it. If everything operates smoothly, re-install the hinge caps.



Use trim and/or/plus extension jambs to lock the window into place, using a sealant as you progress to create a clean finish look to the installation.

Line up the Window Well to the previous markings of where the Window Well is to be mounted..

Use the top hole on one side of the mounting flange of the Window Well to calculate where to mark where the fasteners need to go so that the Window Well will sit about 4" above the grade level. Mark that spot and then use a hammer drill with the correct size bit for the fastener being used, drill out where that first fastener will go.

Determine the correct type of fasteners to use on your type of foundation. That could be split anchor bolts, Tapcons, butterfly anchors, etc. Note: with any of these fasteners, use fender washers as well.

Continue



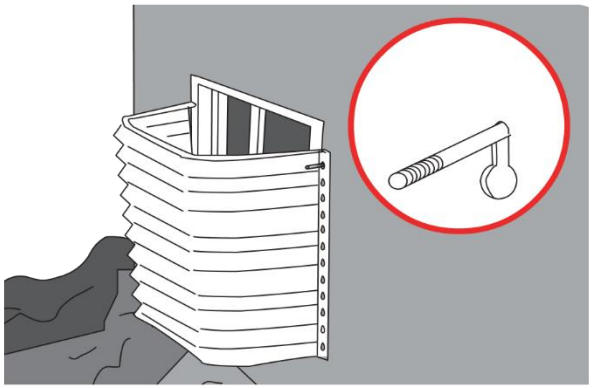

Mount well on wall. The Well should be roughly 4" above where the grade level will be. Note: It should not be mounted flush at the top with the grade level. That would allow any puddles that might form during rainstorms to spill right into the Window Well. The Well should extend roughly 12", or more, below the bottom of the Egress Window for proper drainage. Note: If a foundation drain is exposed during excavation, see drainage section for proper drain installation.

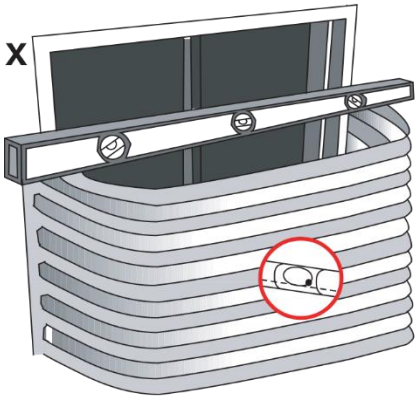

Temporarily hang the Window Well on that first fastener (only one side). Use a carpenter's level to be sure the Window Well is level and mark the opposite side where the other top fastener needs to go to make the well level. Note: be sure it is in line with the plumb (vertical) line. Add PL Premium Construction Adhesive between the mounting flange and the foundation for a watertight seal. Mark and add additional fasteners every 10" down each side of the well to complete the installation of the Well. Make sure that the bottom mounting hole has a fastener so that all four corners are securely fastened during backfilling.

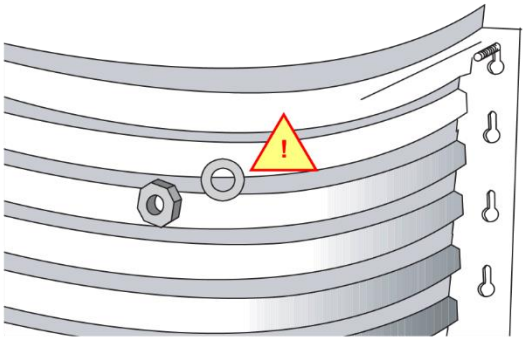

Use of washers is critical!

Note: Waterproof as necessary prior to backfilling.

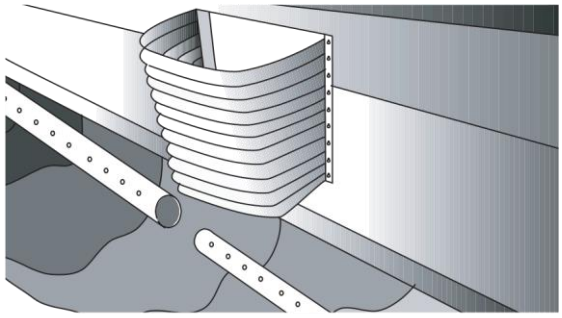

Before starting, note that not all states are required by code to install footing perimeter drains. Therefore, you may not find one on your project. If so, skip this section of the installation instructions. Here is a side view of a typical perimeter drain, there are many ways in which this drain may be installed on your project. Adapt these instructions as needed.

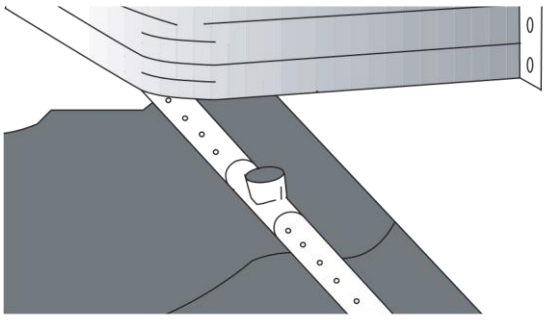

Cut the drainpipe to accommodate a T-joint under window well location and. Splice the t-joint to the drainpipe with the opening pointing up.

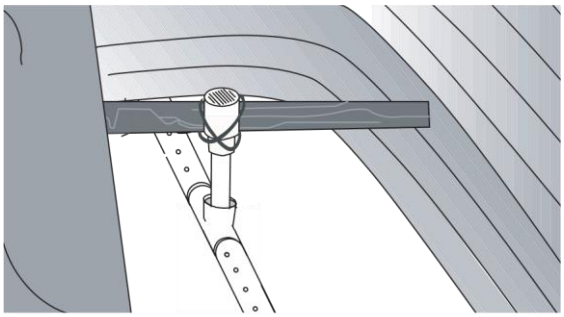

Once T-joint is installed, add a drain piece that will end up sitting roughly 4" to 6" below the sill of the window.

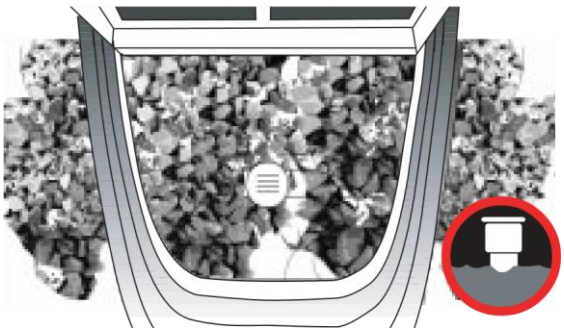

Whether you have a perimeter drain or not, back fill with a roughly 1" pea gravel, drainage rock, or crushed stone, depending on soil density in your area. Select backfill material should be used that is free of large rock, soil clods, frozen material or other active soils. Check with your local municipality for soil charts. Fill that roughly one foot of space around the backside of the Window Well with the stone/gravel/rock. Add about 10" – 12" of stone/gravel/rock to the bottom of the Window Well on the inside. Note: If you do have a perimeter drain, it should sit in the center of the well and should be kept clear of debris.

Avoid use of heavy construction equipment near window wells after backfilling.

Life-Step™ egress ladders are required for finished window well heights greater than 44”*. Hook the Egress Ladder over the edge of the Window Well positioning it directly across from the window operational opening. Attach ladder to well with self-tapping sheet metal screws using the pre-drilled holes on ladder.

Safe-T-View Cover™ hybrid egress window well covers attaches to the top of the Window Well with pincher clips. Turn the Cover upside down to see these clips and make adjustments to them as needed. Use a screwdriver to move these clips along the slotted rail to line up the clip with the top edge of the Window Well. Once adjusted properly, the Cover can be popped off and on with a simply push. Remove the protective film from the Cover as soon as possible. Prolonged exposure to sunlight and heat makes the removal of the film more difficult.