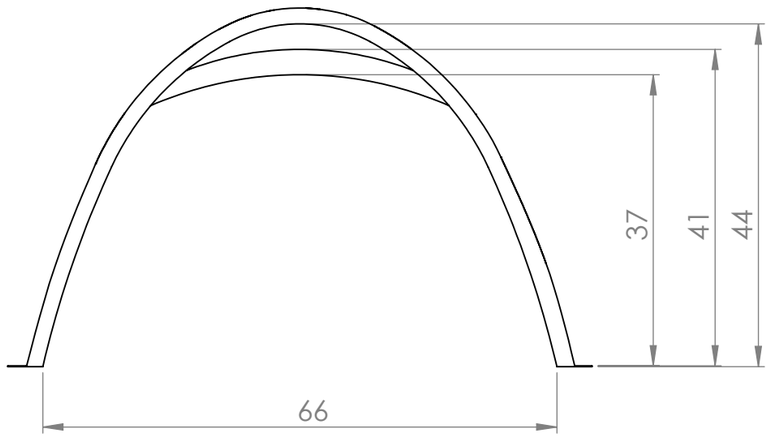

Top View

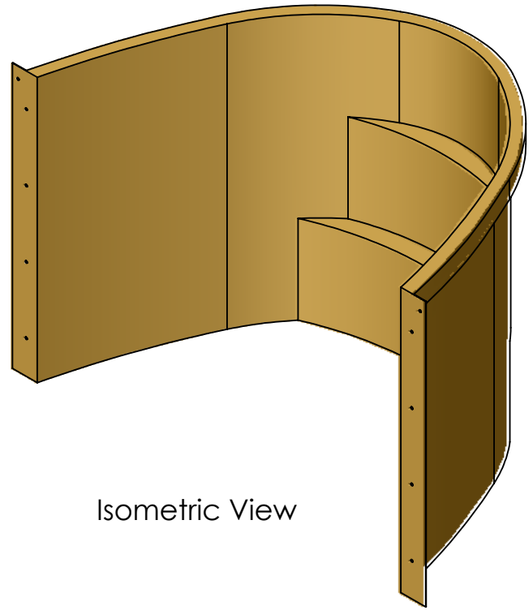

Isometric View

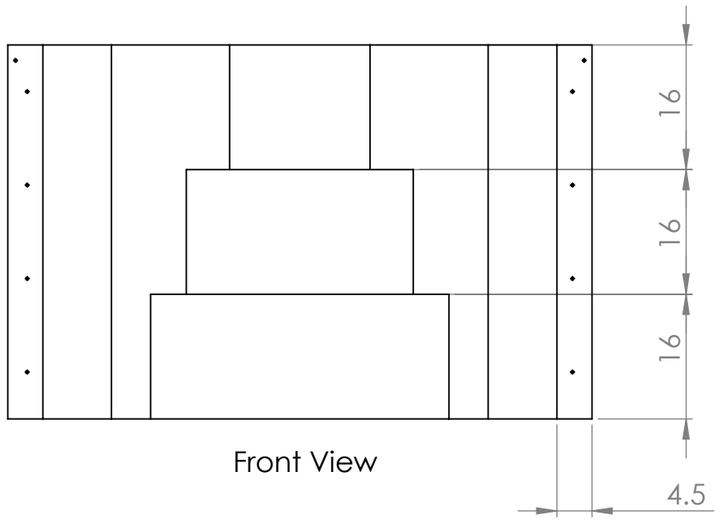

Front View

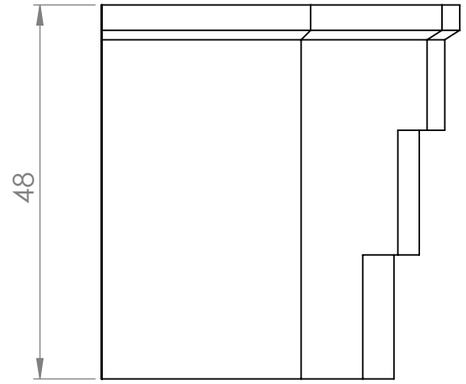

Side View

UNLESS OTHERWISE SPECIFIED: DIMENSIONS ARE IN MILLIMETERS SURFACE FINISH: TOLERANCES: LINEAR: ANGULAR:	FINISH:				DEBUR AND BREAK SHARP EDGES	DO NOT SCALE DRAWING / REVISION
						RockWell, LLC
	NAME	SIGNATURE	DATE			TITLE: Elite Window Well 66 x 44 x 48
DRAWN						
CHK'D						
APPV'D						
MFG						
Q.A				MATERIAL:		DWG NO. WET-664448 / A3
				WEIGHT:		SCALE:1:20 / SHEET 1 OF 1