Easy Egress Kit with Single Hung In-Swing Escape Window Installation Instructions

ALERT: BEFORE STARTING AN EGRESS WINDOW KIT INTALLATION, CONTACT LOCAL MUNICIPALITY FOR PERMITS. CALL 811 SERVICE TO FIND UNDERGROUND WATER LINES AND OTHER UTILITIES FOR SAFE DIGGING.

PRINT THESE INSTRUCTIONS AND FOLLOW THEM AS YOU INSTALL YOUR KIT.

Excavate area for window well installation. Set the Well on the ground where the Well will be installed. Mark the shape of the well on the ground. Make another line that is roughly 12" further out, all the way around the Well. You want to over dig the hole by about a foot all the way around the Window Well. This leaves space for backfilling with pea gravel/crushed stone afterwards. Remove all the dirt from this marked out area to the depth of your Window Well.

Manufacturers Recommended Rough Opening Sizes: Single Hung In-Swing Escape Window. These sizes are based on using 2"X pressure treated wood all the way around the rough opening. Thereby creating a wooden window buck that you will be attaching the window to. These size recommendations are designed to leave roughly a 1/8" space all the way around the window to allow for shimming. *

Window Size	Recommended Rough Opening Size
28" wide X 46" high	31 1/2" wide X 49 ½" high
31" wide X 41" high	34 ½" wide X 44 ½" high
36" wide X 36" high	39 ½" wide X 39 ½" high
28" wide X 52" high	31 ½" wide X 55 ½" high

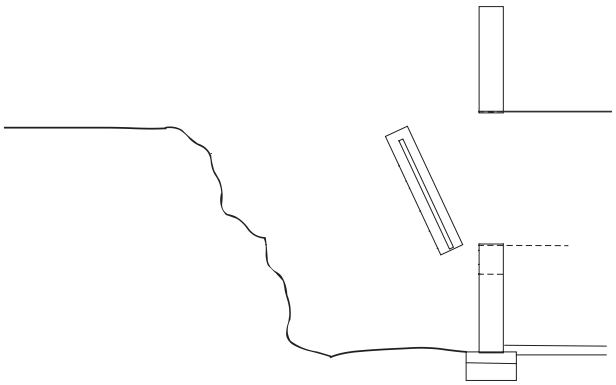

Cut and remove that piece of foundation from the wall. Remove that slab from the hole. This may require breaking this slab up into smaller pieces since it is heavy. Note: do not bury this slab or its pieces in the window well area. It must be removed for proper drainage.

Using pressure treated lumber, build a frame for the window to sit in. Secure the wood using PL Premium Construction Adhesive and appropriate concrete fasteners to secure the lumber properly.

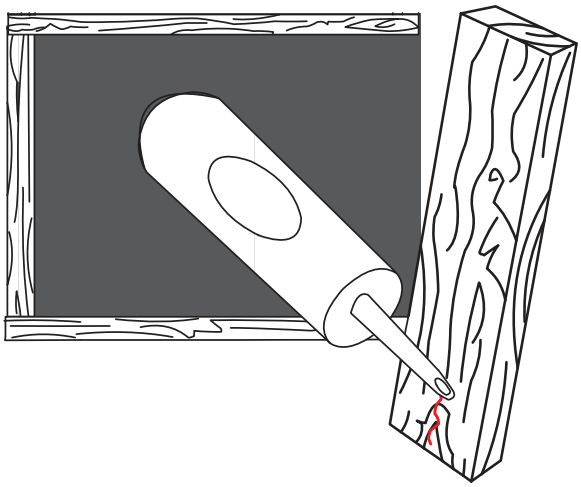

ESCAPE™ WINDOW

Installation Instructions

1. Set the window into the opening and place a 1/8" shim under the hinge side of the window.
2. Unlatch the multi-point emergency release lever and swing unit open.
3. Anchor the top hinge side by running a #8 X 2 ½" Flat Head screw into the embossed line of the fixed frame jamb approx. 3" below the head.
4. Anchor the lower hinge side by running a screw in the embossed line of the fixed frame jamb approx. 3" above the sill.
5. Remove one screw from each strike plate on the lock side jamb of the fixed frame.
6. Align the fixed main frame to the swing frame by raising or lowering the strike side of the fixed main frame. Once in proper position shim plumb and
   PARELLEL
7. To the swing frame, install an installation screw in the place of each of the strike plate screws that you have removed.
8. Check to see that the swing frame clears and rests on the round alignment shim when closing.
9. Insulate around the perimeter, trim window accordingly, and seal with a quality caulk recommended for vinyl.

DO NOT BLOCK DRAIN HOLES ON EXTERIOR BOTTOM

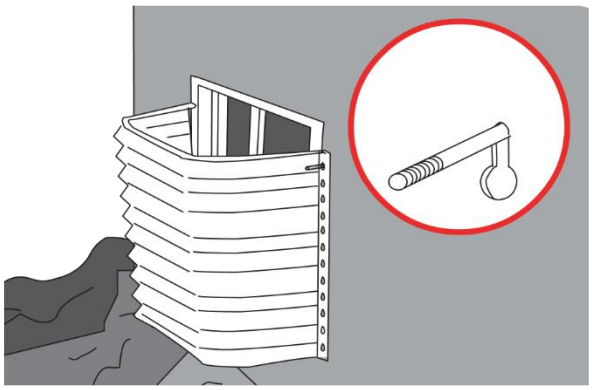

Find the Window Well size from your original order. Or it is also written on the inside of the Window Well in faint grey lettering a few ribs down from the top on one side, closer to the mounting flange. The lettering starts with BK, then the next two numbers are the bolt hole to bolt hole width measurement. Take that width measurement and mark two plumb (vertical) lines on the foundation wall. Center these lines with the window opening in the foundation. Use the top hole on one side of the mounting flange of the Window Well to calculate where to mark where the fasteners need to go so that the Window Well will sit about 4" above the grade level. Mark that spot and then use a hammer drill with the correct size bit for the fastener being used, drill out where that first fastener will go.

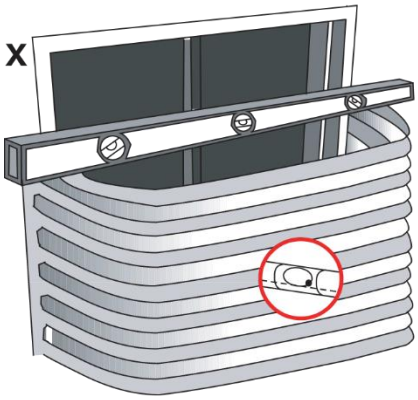

Determine the correct type of fasteners to use on your type of foundation. That could be split anchor bolts, Tapcons, butterfly anchors, etc. Note: with any of these fasteners, use fender washers as well.

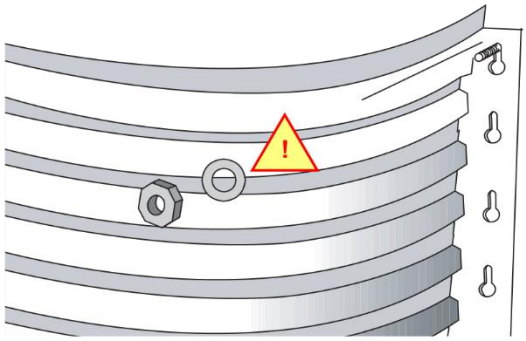

Use of washers is critical!

Mount well on wall. The Well should be roughly 4" above where the grade level will be. Note: It should not be mounted flush at the top with the grade level. That would allow any puddles that might form during rainstorms to spill right into the Window Well. The Well should extend roughly 12", or more, below the bottom of the Egress Window for proper drainage. Note: If a foundation drain is exposed during excavation, see drainage section for proper drain installation.

Temporarily hang the Window Well on that first fastener (only one side). Use a carpenter's level to be sure the Window Well is level and mark the opposite side where the other top fastener needs to go to make the well level. Note: be sure it is in line with the plumb (vertical) line. Add PL Premium Construction Adhesive between the mounting flange and the foundation for a watertight seal. Mark and add additional fasteners every 10" down each side of the well to complete the installation of the Well. Make sure that the bottom mounting hole has a fastener so that all four corners are securely fastened during backfilling.

Note: Waterproof as necessary prior to backfilling.

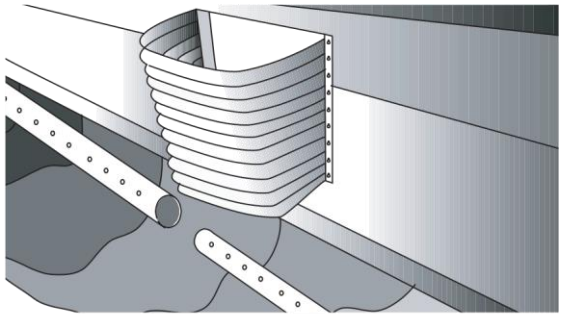

Before starting, note that not all states are required by code to install footing perimeter drains. Therefore, you may not find one on your project. If so, skip this section of the installation instructions. Here is a side view of a typical perimeter drain, there are many ways in which this drain may be installed on your project. Adapt these instructions as needed.

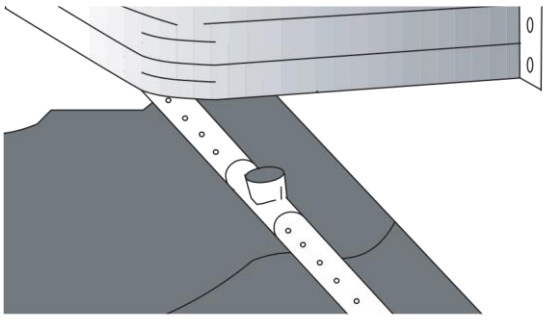

Cut the drainpipe to accommodate a T-joint under window well location and. Splice the t-joint to the drainpipe with the opening pointing up.

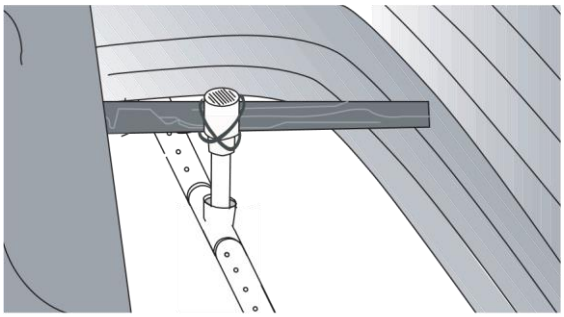

Once T-joint is installed, add a drain piece that will end up sitting roughly 4" to 6" below the sill of the window.

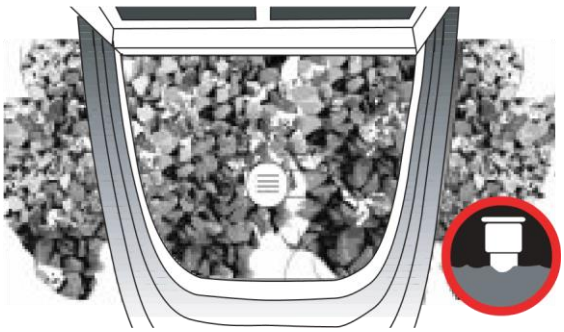

Whether you have a perimeter drain or not, back fill with a roughly 1" pea gravel, drainage rock, or crushed stone, depending on soil density in your area. Select backfill material should be used that is free of large rock, soil clods, frozen material or other active soils. Check with your local municipality for soil charts. Fill that roughly one foot of space around the backside of the Window Well with the stone/gravel/rock. Add about 10" – 12" of stone/gravel/rock to the bottom of the Window Well on the inside. Note: If you do have a perimeter drain, it should sit in the center of the well and should be kept clear of debris.

Avoid use of heavy construction equipment near window wells after backfilling.

Hook the Egress Ladder over the edge of the Window Well. Attach ladder to well with self-tapping sheet metal screws using the pre-drilled holes on ladder.

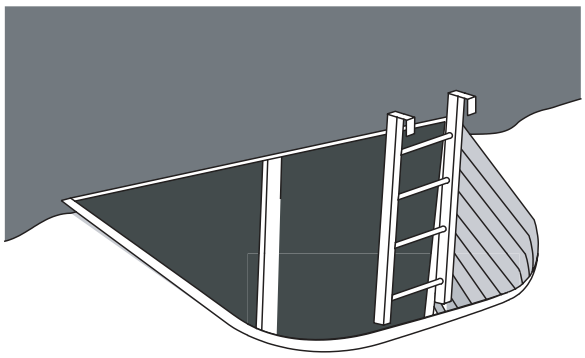

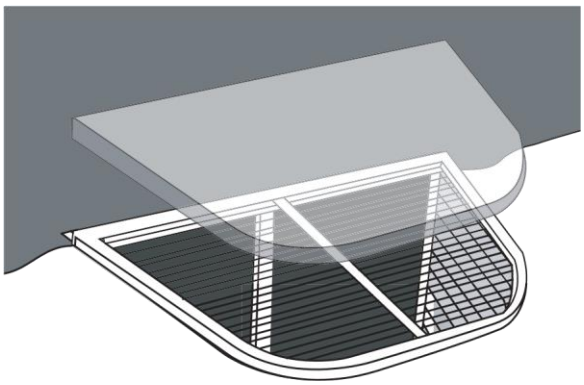

Grates and clear Lexan Polycarbonate Covers prevent accidental fall-ins by children, animals. They also keep debris, and water from entering the Window Well. Set the Grate on top of the Window Well. Use the supplied self-adhesive Velcro tabs to attach the Cover to the Grate. Clean off both surfaces before applying the self-adhesive tabs. Remove the protective film from the Cover as soon as possible. Prolonged exposure to sunlight and heat makes the removal of the film more difficult.