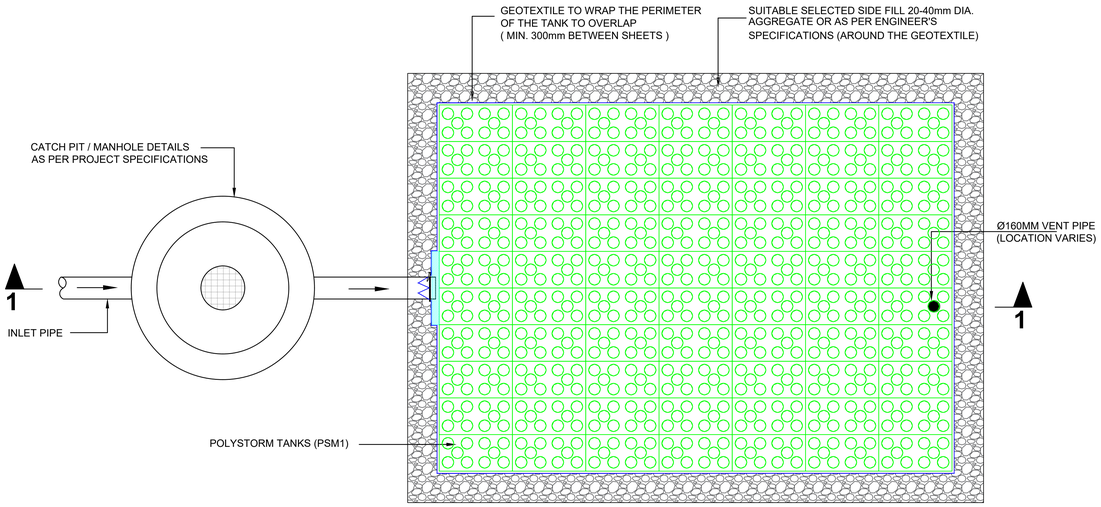


SOAKAWAY TANK - PLAN

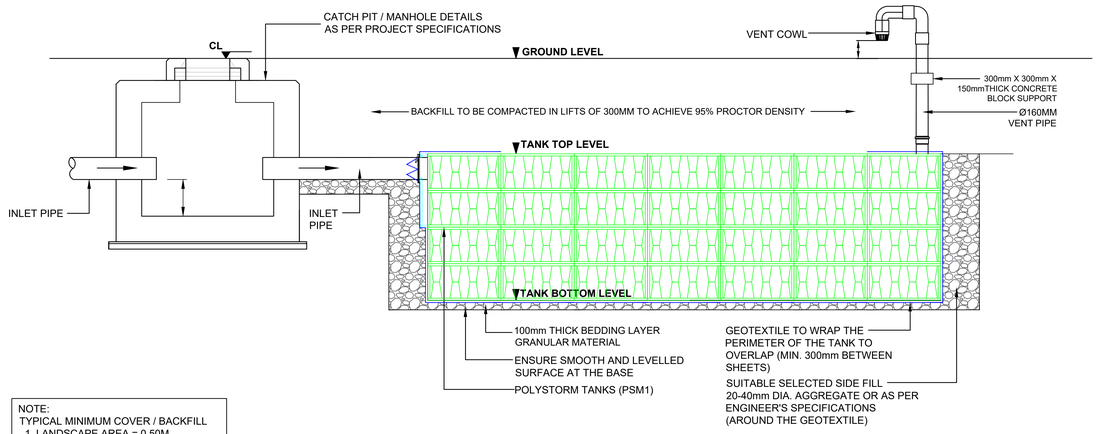


NOTE:
TYPICAL MINIMUM COVER / BACKFILL
1. LANDSCAPE AREA = 0.50M
2. UNDER CAR PARK = 0.80M
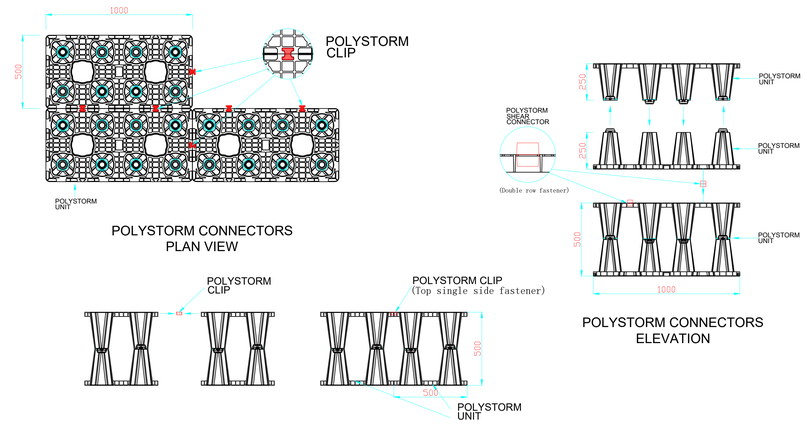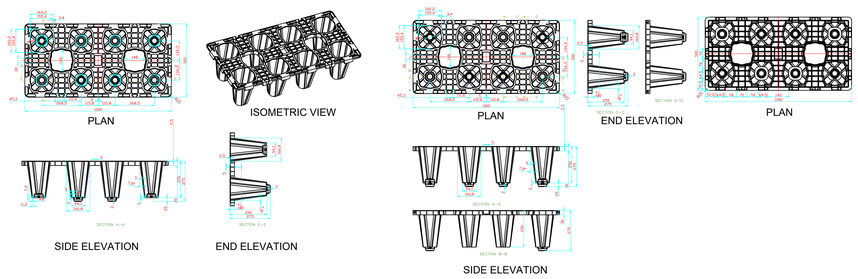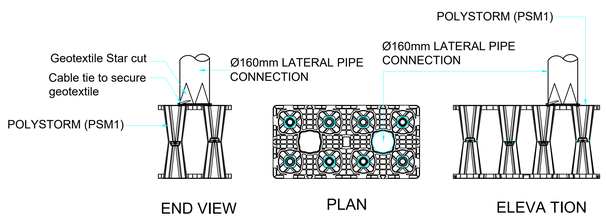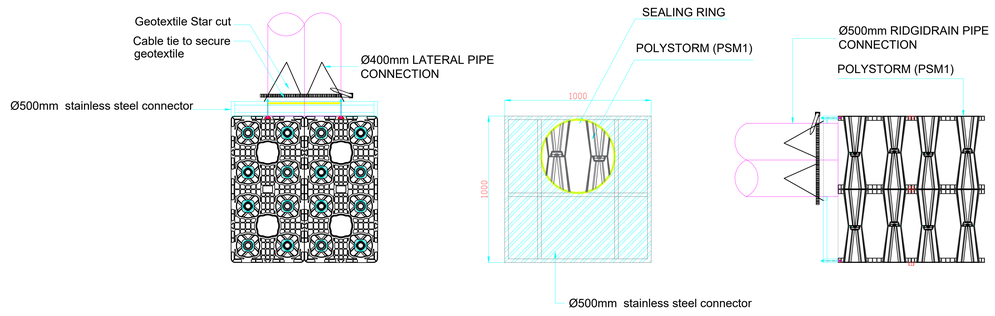
SOAKAWAY TANK
SECTIONAL ELEVATION 1-1