LIQUID RECEIVERS

BH0014 .. BH0786
BV0007 .. BV0224



DP-305-11

In addition to a wide array of shell and tube heat exchangers, receivers and oil separators, BITZER US also delivers high quality pressure vessels that meet the demand for industrial Ammonia and CO2 applications. These vessels are commonly used in cold storage facilities, ice makers, supermarkets and other industrial processing systems.

BITZER US utilizes multiple welding stations that provide consistent and reliable welds resulting in shorter lead times. All vessels are manufactured in Georgia and in accordance to the most recent edition of Section VIII, Division 1 of the ASME code or other certifications as required.

Design Capabilities

- Max Diameter: 72”
- Max Length: 290”
- Max Pressure: 3000 PSI
- Min Temperature: -55F

Testing

- Ultrasonic
- Penetrant
- Decay Test

Certifications

- ASME
- PED
- CRN
- DOSH

Manufacturing

- Robotic Welding
- Water Jet
- Pipe Cutter
- Plasma Table
- CNC Machine Shop

Vessel Factory (Georgia)





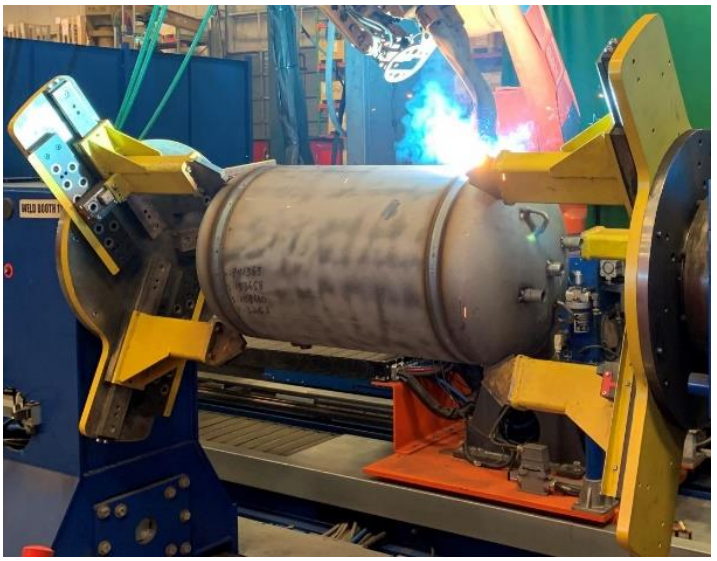

ASME Receivers

BITZER ASME low and high pressure liquid refrigerant receivers are designed for use in both commercial and industrial refrigeration and HVAC applications. They are available in both horizontal and vertical configurations with multiple accessories/options.



Advantages

- All receivers are thoroughly sand blasted and cleaned both inside and outside
- Robotic welding technology used for optimum quality and product appearance
- BITZER engineering and global pressure vessel experience
- All products are made in the USA

Design Safety

- Approval according to the ASME Section VIII, Division 1, latest edition.

Standard Design Features

- Suitable for use for (H)CFC / HFC / HFO refrigerants, including but not limited to: R22, R134a, R407C, R450A R404A, R507, R513A, R407A, R448A, and others. Consult factory regarding application of refrigerants not listed here within.
- Designs for higher pressure R410A

Standard Design Maximum Operating Pressure / Operating Temperature

- Low pressure models: 450 psi@ -20 to 250F
- High pressure models: 675 psi @ -20 to 250F

CRN Registrations

- Available for all 450 psi models. Consult factory for 675 psi

Rotalock Valves

- Rotalock valves installed when option is selected
- See page 7 for sizes and availability

Accessories/Options

- Mounting brackets for compressors. Please refer to Compressor mounting kits chart (page 10) for information.
- Special paint
- Support brackets / feet
- Sightglass
- Liquid level flange for mechanical float
- Optoelectronic level monitoring (OLC-D1)
- Connection for vertical measurement probe float

Explanation of Model Number

B	V	0	0	0	5	X	L	-	X	X	X

Model designation
B = Bitzer receiver

B	V	0	0	0	5	X	L	-	X	X	X

Model orientation
V= Vertical, H = Horizontal

B	V	0	0	0	5	X	L	-	X	X	X

Nominal Capacity
XXXX = Volume in liters (l)

B	V	0	0	0	5	N	L	-	X	X	X

Bracket and feet configuration
N = Welded feet (horizontal, standard config)
N = Welded skirt (vertical, standard config)
F = Welded feet(vertical)
H = Welded feet and top brackets (single compressor assembly) (UP to 12" OD)
X = No feet and No top brackets

B	V	0	0	0	5	X	L	-	X	X	X

Version
L = HFC Refrigerant (450 psi rating)
K = R410a Refrigerant (675 psi rating)

B	V	0	0	0	5	X	L	-	X	X	X

Connection Type
X = Standard IDS Connection (standard config)
R = Rotalock Valves installed*

B	V	0	0	0	5	X	L	-	X	X	X

Design variables
X = No options (standard config)
L = LLI flange
S = Standard sight glass
D = Standard sightglass(es) and LLI flange (horizontal)
D = Standard sightglass(es) and vertical probe port (vertical)
M = Vertical probe port (1 ¼ - 12) w. cap (vertical only)
E = Optoelectronic level monitoring ports w. caps (OLC-D1**) (vertical only)

B	V	0	0	0	5	X	L	-	X	X	X

Design variables
X = No options
Z = Consult BITZER

* See pages 6 and 7 for availability and sizes
** Order separately

Other connections

- Safety/pressure relief connections on all models. See specifications table for additional information
- Safety valve can be supplied upon customer request

Accessories
OLC-Optoelectronic Liquid Level Monitoring

Features/Options

- 250V Switch inductive rating provides option to directly power other devices
- 3 voltages available: 115V, 230V,24V AC/DC
- Tee – offers the option to have both sightglass and the OLC-D1
- UL Listed

Features and Benefits	BITZER	Other Brands
LED Visual Indicator	✓	✗
Self-Diagnosis -Alerts for incorrect installation, low power supply, internal failure	✓	✗
Highest Switch Inductive Rating	✓	✗
Independent Control vs. Supply Volt- ages	✓	✗

How to order

- Request your vertical receiver with option "E" – BV0005XL-XEX. This option includes 2 x 1 3/4-12 Rotalock stubs on the shell. These are located at 25% and 75% volume levels.
- Order these required parts separately
  - OLC-D1 Optoelectronic Eye Kit (Includes OLC-D1 sensor, mounting cap, O-ring and prism)
    347950-01 230V
    347950-02 115V
    347950-04 24 VDC/VAC
  - Optional Tee Fitting
    365433-56
  - Optional Sightglass
    182102000
- The options above are shipped individually and are not installed at the factory.
- For additional instructions, refer to BITZER document: OT-300 Technical information.



Valves

- Flare connection

Connections		Gauge Port Connection Location		
Flare	Coupling	Top	Right	Left
SAEM 3/8"	3/4 -16	500212050	*	*
SAEM 1/2"	3/4 -16	50021305	*	*
SAEM 1/2"	1 -14	*	*	500845050
SAEM 5/8"	1 -14	503140050	*	*



- Brazed (solder) connection

Connections		Gauge Port Connection Location		
IDS	Rotalock	Top	Right	Left
3/8 IDS	3/4 - 16	500113050	*	*
1/2 IDS	1 - 14	500815050	*	*
5/8 IDS	1 - 14	503110050	*	*
7/8 IDS	1 1/4 - 12	*	*	506040050
1 1/8 IDS	1 3/4 - 12	*	*	508141050
1 1/8 IDS	1 1/4 - 12	506113050	*	*
1 3/8 IDS	1 3/4 - 12	*	*	508043050
1 3/8 IDS	2 1/4 - 12	*	*	509041050
1 5/8 IDS	2 1/4 - 12	*	*	509051050
2 1/8 IDS	2 1/4 - 12	509060050	*	*

*Connection location available on request



Liquid Level Indicator Gauge

Drop in replacement for leading brand
- No engineering needed
- Same bolt pattern (Senior gauge)

Features and Benefits	BITZER	Other Brands
Waterproof Connection	✓	✗
Detachable / Replaceable Cable	✓	✗
Two different Output Voltage ○ 1 to 2 V ○ .5 to 4.5 V	✓	✗
Stable output signal	✓	✗
Wider Allowable Voltage Input 6 to 30 V Vs. 8 to 24 V	✓	✗

Vessel OD	Mechanical FLOAT Without Outlet Signal	.5-4.5V		1-2V	
		Without Junction Box	With Junction Box	Without Junction Box	With Junction Box
8.625	FG08	FG08-1	FG08-1J	FG08-2	FG08-2J
10.75	FG10	FG10-1	FG10-1J	FG10-2	FG10-2J
12.75	FG12	FG12-1	FG12-1J	FG12-2	FG12-2J
14	FG14	FG14-1	FG14-1J	FG14-2	FG14-2J
16	FG16	FG16-1	FG16-1J	FG16-2	FG16-2J
18	FG18	FG18-1	FG18-1J	FG18-2	FG18-2J
20	FG20	FG20-1	FG20-1J	FG20-2	FG20-2J
24	FG24	FG24-1	FG24-1J	FG24-2	FG24-2J

Mechanical gauge only



"Hall sensor" (electronic) gauge with detachable lead wire



"Hall sensor" gauge with lead wire & junction box installed



BITZER Software

Online BITZER software (bitzerpv.com) provides selection of catalog receivers based on pumpdown capacity or desired length and/or diameter. The tool offers the following functionalities:
- Schematic drawing
- Optional add-ons and configurations
- Wide range of refrigerants

Custom receivers and vessels can be selected via "custom receivers" mode.



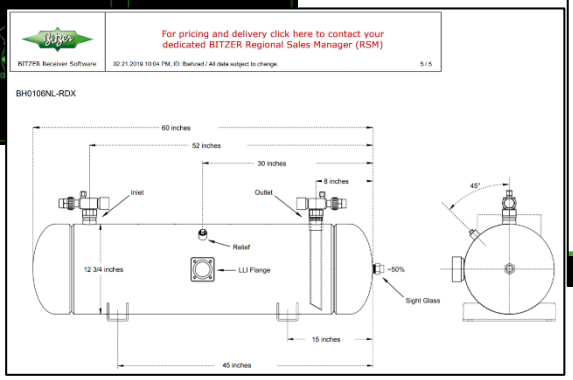

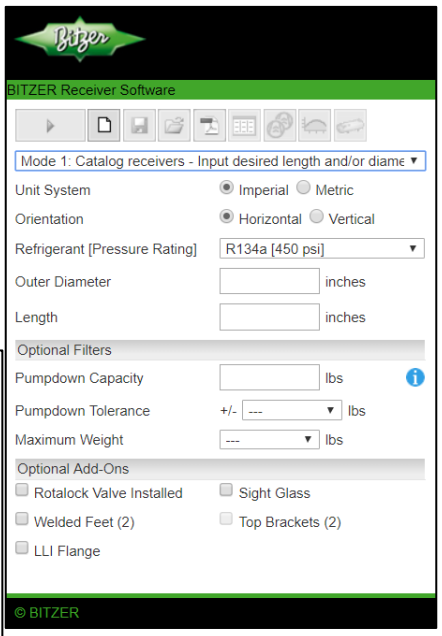

Horizontal Liquid Receivers

MODEL	Dimensions		Pumpdown capacity [lb] (90% of volume @ 90°F)						Weight	Standard connections (IDS)		Safety	Valve connections** (IDS)	
	OD [in]	Length [in]	R134a	R407C	R404A	R507A	R22	R410a*		Inlet	Outlet		Inlet	Outlet
BH0014X(L/K)-XXX	6 5/8	30	33.6	29.6	27.7	28.9	33.3	27.5	64	5/8	5/8	1/2	5/8	5/8
BH0017X(L/K)-XXX	6 5/8	36	40.6	3S.8	33.4	34.9	40.3	33.3	82	7/8	7/8	1/2	5/8	5/8
BH0030X(L/K)-XXX	8 5/8	36	70.1	61.7	57.7	60.3	69.5	59.2	91	1 1/8	1 1/8	1/2	7/8	7/8
BH0035X(L/K)-XXX	8 5/8	42	82.4	72.5	67.8	70.8	81.6	69.6	106	1 1/8	1 1/8	1/2	1 1/8	1 1/8
BH0041X(L/K)-XXX	8 5/8	48	94.6	83.3	77.9	81.3	93.8	80	120	1 1/8	1 1/8	1/2	1 1/8	1 1/8
BH0051X(L/K)-XXX	8 5/8	60	119.2	104.9	98.1	102.4	118.1	100.8	150	1 1/8	1 1/8	1/2	1 1/8	1 1/8
BH0062X(L/K)-XXX	8 5/8	72	143.7	126.5	118.3	123.5	142.4	121.5	197	1 1/8	1 1/8	1/2	1 1/8	1 1/8
BH0046X(L/K)-XXX	10 3/4	36	106.9	94.1	88	91.9	105.9	88.8	167	1 3/8	1 3/8	1/2	1 1/8	1 1/8
BH0063X(L/K)-XXX	10 3/4	48	144.7	127.4	119.1	124.4	143.4	120.3	220	1 3/8	1 3/8	1/2	1 1/8	1 1/8
BH0078X(L/K)-XXX	10 3/4	60	182.6	160.8	150.3	156.9	180.9	151.9	273	1 3/8	1 3/8	1/2	1 1/8	1 1/8
BH0095X(L/K)-XXX	10 3/4	72	220.5	194.1	181.5	189.5	218.5	183.5	325	1 3/8	1 3/8	1/2	1 1/8	1 1/8
BH0111X(L/K)-XXX	10 3/4	84	258.3	227.4	212.6	222	256	215.1	378	1 5/8	1 5/8	1/2	1 3/8	1 3/8
BH0127X(L/K)-XXX	10 3/4	96	296.2	260.8	243.8	254.6	293.5	246.7	445	1 5/8	1 5/8	1/2	1 3/8	1 3/8
BH0084X(L/K)-XXX	12 3/4	48	196.2	172.8	161.5	168.7	194.4	171.3	271	1 5/8	1 5/8	1/2	1 3/8	1 3/8
BH0106X(L/K)-XXX	12 3/4	60	248.1	218.4	204.2	213.3	245.8	216.6	336	1 5/8	1 5/8	1/2	1 3/8	1 3/8
BH0129X(L/K)-XXX	12 3/4	72	300	264.1	246.9	257.9	297.3	261.9	400	2 1/8	1 3/8	1/2	2 1/8	1 3/8
BH0173X(L/K)-XXX	12 3/4	96	403.8	355.5	332.4	347.1	400.1	352.5	539	2 1/8	1 3/8	1/2	2 1/8	1 3/8
BH0156X(L/K)-XXX	14	72	364.6	321.1	300.2	313.4	361.3	318.3	442	2 1/8	1 3/8	1/2	1 5/8	1 5/8
BH0211X(L/K)-XXX	14	96	491.2	432.5	404.3	422.2	486.7	428.8	626	2 5/8	2 1/8	1/2	1 5/8	1 5/8
BH0170X(L/K)-XXX	16	60	396.9	349.5	326.7	341.2	393.3	334.2	566	2 5/8	2 1/8	1/2	2 1/8	2 1/8
BH0206X(L/K)-XXX	16	72	480.7	423.3	395.7	413.2	476.3	405	674	2 5/8	2 1/8	1/2	2 1/8	2 1/8
BH0278X(L/K)-XXX	16	96	648.3	570.8	533.7	557.3	642.4	546.6	917	2 5/8	2 1/8	1/2	2 1/8	2 1/8
BH0262X(L/K)-XXX	18	72	612.1	538.9	503.8	526.1	606.5	517.7	795	3 1/8	2 1/8	1/2	-	2 1/8
BH0325X(L/K)-XXX	20	72	758.5	667.9	624.4	652	751.6	643.5	857	3 1/8	2 5/8	1/2	-	2 1/8
BH0383X(L/K)-XXX	20	84	892.1	785.4	734.3	766.8	884	757.1	993	3 1/8	2 5/8	1/2	-	2 1/8
BH0440X(L/K)-XXX	20	96	1025.6	903	844.2	881.6	1016.3	870.7	1198	3 1/8	2 5/8	1/2	-	2 1/8
BH0622X(L/K)-XXX	24	96	1450.8	1277.5	1194.3	1247.1	1437.7	1266.6	1370	3 5/8	3 1/8	3/4	-	-
BH0786X(L/K)-XXX	24	120	1832.1	1613.1	1508.1	1574.8	1815.5	1599.5	1470	4 1/8	3 5/8	3/4	-	-

* R410A figures refers to capacity of high pressure models: B(V/H)xxxxx**K**
Refers to “R” models: B(V/H)xxxxxx-R**xx with valves installed

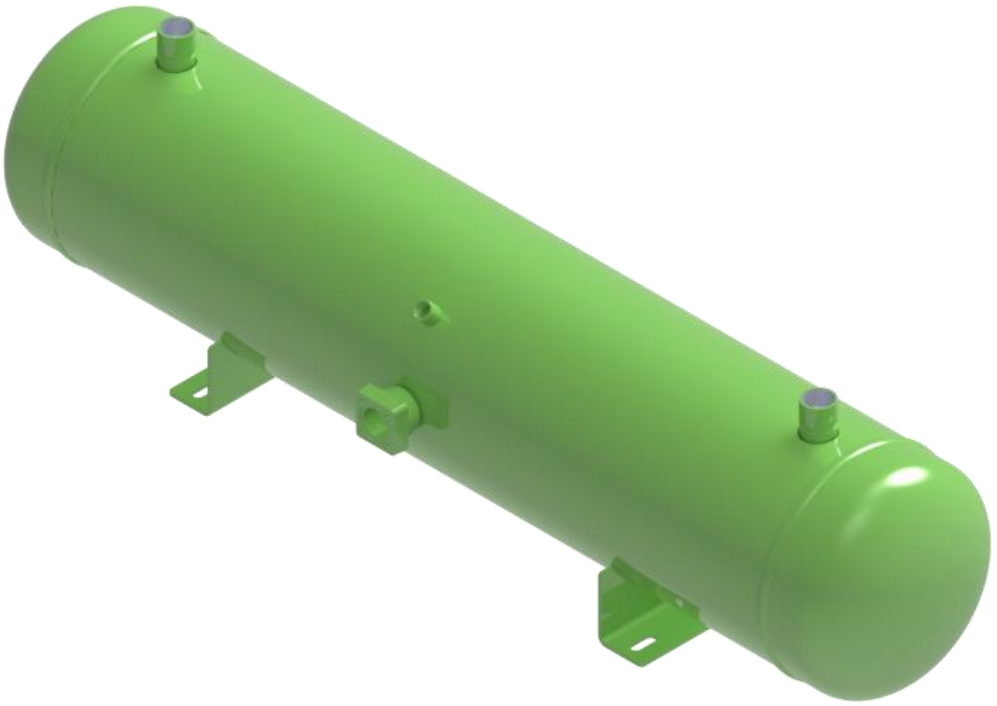

Vertical Liquid Receivers

MODEL	Dimensions		Pumpdown capacity [lb] (90% of volume @ 90°F)						Weight	Standard connections (IDS)		Safety	Valve connections (IDS) **	
	OD [in]	Length [in]	R134a	R407C	R404A	R507A	R22	R410a*		Inlet	Outlet		Inlet	Outlet
BV0007N(L/K)-XXX	6 5/8	15	16.0	14.1	13.2	13.8	15.9	13.0	39	5/8	5/8	3/8	1/2	1/2
BV0009N(L/K)-XXX	8 5/8	12	21.1	18.6	17.3	18.1	20.9	17.7	33	5/8	5/8	3/8	1/2	1/2
BV0013N(L/K)-XXX	8 5/8	16	29.2	25.7	24.1	25.1	29.0	24.6	43	5/8	5/8	3/8	1/2	1/2
BV0014N(L/K)-XXX	8 5/8	18	33.3	29.3	27.4	28.6	33.0	28.1	48	1/2	1/2	3/8	1/2	1/2
BV0020N(L/K)-XXX	8 5/8	24	45.6	40.1	37.5	39.2	45.2	38.5	62	5/8	5/8	3/8	5/8	5/8
BV0027N(L/K)-XXX	8 5/8	32	61.9	54.5	51.0	53.2	61.4	52.3	100	5/8	5/8	3/8	7/8	7/8
BV0021N(L/K)-XXX	10 3/4	18	50.1	44.1	41.2	43.0	49.6	414.0	88	1 1/8	7/8	1/2	5/8	5/8
BV0035N(L/K)-XXX	10 3/4	28	81.6	71.9	67.2	70.2	80.9	67.7	132	1 1/8	7/8	1/2	1 1/8	1 1/8
BV0049N(L/K)-XXX	10 3/4	38	113.2	99.7	93.2	97.3	112.2	94.0	191	1 1/8	1 1/8	1/2	1 1/8	1 1/8
BV0029N(L/K)-XXX	12 3/4	18	66.5	58.5	54.7	57.1	65.9	58.0	110	1 1/8	1 1/8	1/2	1 1/8	1 1/8
BV0032N(L/K)-XXX	12 3/4	20	75.1	66.1	61.8	64.6	74.4	65.6	121	1 1/8	1 1/8	1/2	1 1/8	1 1/8
BV0040N(L/K)-XXX	12 3/4	24	92.4	81.4	76.1	79.4	91.6	80.7	142	1 1/8	1 1/8	1/2	1 1/8	1 1/8
BV0062N(L/K)-XXX	12 3/4	36	144.3	127.1	118.8	124.0	143.0	126.0	207	1 1/8	1 1/8	1/2	1 1/8	1 1/8
BV0073N(L/K)-XXX	12 3/4	42	170.3	149.9	140.2	146.3	168.7	148.6	239	1 3/8	1 3/8	1/2	1 1/8	1 1/8
BV0084N(L/K)-XXX	12 3/4	48	196.2	172.8	161.5	168.7	194.4	171.3	281	1 3/8	1 1/8	1/2	1 3/8	1 1/8
BV0048N(L/K)-XXX	14	24	111.6	98.2	91.9	95.9	110.6	97.4	158	1 3/8	1 3/8	1/2	1 3/8	1 3/8
BV0098N(L/K)-XXX	14	46	227.6	200.4	187.3	195.6	225.5	198.7	330	1 3/8	1 3/8	1/2	1 3/8	1 3/8
BV0063N(L/K)-XXX	16	24	145.5	128.1	119.8	125.0	144.2	121.9	243	1 3/8	1 3/8	1/2	1 3/8	1 3/8
BV0134N(L/K)-XXX	16	48	313.1	275.7	257.7	269.1	310.2	263.5	459	2 1/8	1 5/8	1/2	1 5/8	1 5/8
BV0170N(L/K)-XXX	16	60	396.9	349.5	326.7	341.2	33.3	334.2	567	2 5/8	2 1/8	1/2	1 5/8	1 5/8
BV0079N(L/K)-XXX	18	24	183.2	161.3	150.8	157.4	181.5	154.0	279	1 5/8	1 5/8	1/2	1 5/8	1 5/8
BV0224N(L/K)-XXX	18	62	522.7	460.2	430.3	449.3	518.0	441.9	820	2 5/8	2 1/8	1/2	1 5/8	1 5/8

*** R410A figures refers to capacity of high pressure models: B(V/H)xxxxxK**
****Refers to "R" models: B(V/H)xxxxxx-Rxx with valves installed**

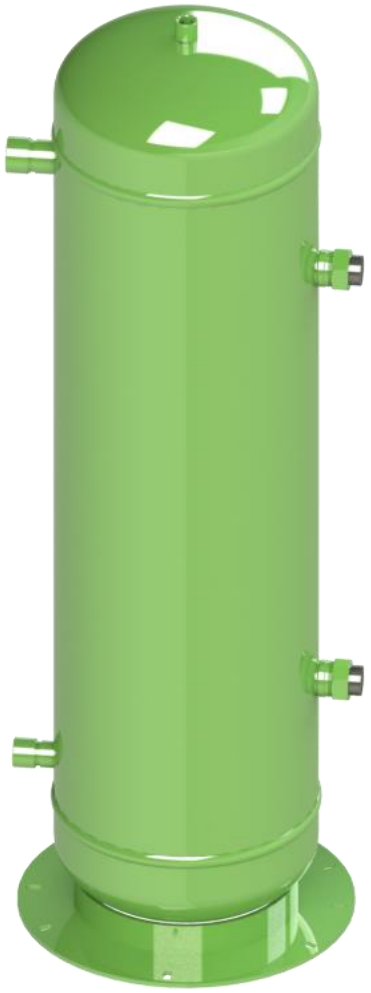

Liquid Receiver Dimensions

Horizontal

MODEL	Dimensions[in]									
	A	B	D	L	S	X	Y	SH	E	E1
BH0014X(L/K)-XXX	4 5/8	25 3/8	6 5/8	30	15	24	6	.63X1.63	4	-
BH0017X(L/K)-XXX	4 5/8	31 3/8	6 5/8	36	18	27	9	.63 X1.63	4	-
BH0030X(L/K)-XXX	4 7/8	31 1/8	8 5/8	36	18	27	9	.63 X1.63	6	-
BH0035X(L/K)-XXX	4 7/8	37 1/8	8 5/8	42	21	33 1/2	9 1/2	.63 X1.63	6	-
BH0041X(L/K)-XXX	4 7/8	43 1/8	8 5/8	48	24	36	12	.63 X1.63	6	-
BH0051X(L/K)-XXX	4 7/8	55 1/8	8 5/8	60	30	45	15	.63 X1.63	6	-
BH0062X(L/K)-XXX	4 7/8	67 1/8	8 5/8	72	36	54	18	.63 X1.63	6	-
BH0046X(L/K)-XXX	7	29	10 3/4	36	18	27	9	.63 X1.63	8	-
BH0063X(L/K)-XXX	7	41	10 3/4	48	24	36	12	.63 X1.63	8	-
BH0078X(L/K)-XXX	7	53	10 3/4	60	30	45	15	.63 X1.63	8	-
BH0095X(L/K)-XXX	7	65	10 3/4	72	36	54	18	.63 X1.63	8	-
BH0111X(L/K)-XXX	7	77	10 3/4	84	42	64	21	.63 X1.63	8	-
BH0127X(L/K)-XXX	7	89	10 3/4	96	48	72	24	.63 X1.63	8	-
BH0084X(L/K)-XXX	8	40	12 3/4	48	42	36	12	.63 X1.63	10	-
BH0106X(L/K)-XXX	8	52	12 3/4	60	30	45	15	.63 X1.63	10	-
BH0129X(L/K)-XXX	8	64	12 3/4	72	36	54	18	.63 X1.63	10	-
BH0173X(L/K)-XXX	8	88	12 3/4	96	48	72	24	.63 X1.63	10	-
BH0156X(L/K)-XXX	8 1/2	63 1/2	14	72	36	54	18	.69X2.19	10 ¾	-
BH0211X(L/K)-XXX	8 1/2	87 1/2	14	96	48	72	24	.69X2.19	10 ¾	-
BH0170X(L/K)-XXX	9	51	16	60	30	45	15(18)	.69X2.19	12 ¾	-
BH0206X(L/K)-XXX	9	63	16	72	36	54	18	.69 X2.19	12 ¾	-
BH0278X(L/K)-XXX	9	87	16	96	48	72	24	.69 X2.19	12 ¾	-
BH0262X(L/K)-XXX	10	62	18	72	36	54	18	.69 X1.94	15¼	10¾
BH0325X(L/K)-XXX	10 1/2	61 1/2	20	72	36	54	18	.69 X1.94	17	12
BH0383X(L/K)-XXX	10 1/2	73 1/2	20	84	42	63	21	.69 X1.94	17	12
BH0440X(L/K)-XXX	10 1/2	85 1/2	20	96	48	72	24	.69 X1.94	17	12
BH0622X(L/K)-XXX	12 1/2	83 1/2	24	96	48	72	24	.69X2.19	20¾	14¾
BH0786X(L/K)-XXX	13	107	24	120	60	84	36	.69 X2.19	20¾	14¾

Vertical

MODEL	A	B	D	L	C	SH
BV0007N(L/K)-XXX	4 5/8	10 3/8	6 5/8	15	8 5/8	.41X1.79
BV0009N(L/K)-XXX	5	7	8 5/8	12	10 5/8	.41X1.79
BV0013N(L/K)-XXX	5	11	8 5/8	16	10 5/8	.41X1.79
BV0014N(L/K)-XXX	5 1/8	12 7/8	8 5/8	18	10 5/8	.41X1.79
BV0020N(L/K)-XXX	5 1/8	19 3/8	8 5/8	24	10 5/8	.41X1.79
BV0027N(L/K)-XXX	5 1/4	26 3/4	8 5/8	32	10 5/8	.41X1.79
BV0021N(L/K)-XXX	6 1/2	11 1/2	10 3/4	18	12 3/4	.41X1.79
BV0035N(L/K)-XXX	6 1/2	21 1/2	10 3/4	28	12 3/4	.41X1.79
BV0049N(L/K)-XXX	6 1/2	31 1/2	10 3/4	38	12 3/4	.41X1.79
BV0029N(L/K)-XXX	7	11	12 3/4	18	14 3/4	.41X1.79
BV0032N(L/K)-XXX	7	13	12 3/4	20	14 3/4	.41X1.79
BV0040N(L/K)-XXX	7	17	12 3/4	24	14 3/4	.41X1.79
BV0062N(L/K)-XXX	7	29	12 3/4	36	14 3/4	.41X1.79
BV0073N(L/K)-XXX	7 1/4	34 3/4	12 3/4	42	14 3/4	.41X1.79
BV0084N(L/K)-XXX	7 1/4	40 3/4	12 3/4	48	14 3/4	.41X1.79
BV0048N(L/K)-XXX	7 1/2	16 1/2	14	24	16.5	.69X1.19
BV0098N(L/K)-XXX	7 1/2	38 1/2	14	46	16.5	.69X1.19
BV0063N(L/K)-XXX	8(8 ½)	16	16	24	18.5	.69X1.19
BV0134N(L/K)-XXX	8 (8 ½)	39	16	48	18.5	.69X1.19
BV0170N(L/K)-XXX	8 (8 ½)	51	16	60	18.5	.69X1.19
BV0079N(L/K)-XXX	9 (9 1/8)	15	18	24	20.5	.69X1.19
BV0224N(L/K)-XXX	9 1/2	52 1/2	18	62	20.5	.69X1.19

Dimensional Drawings for Standard Models

BH0014XL-XXX .. BH0786XL-XXX
BH0014XK-XXX .. BH0786XK-XXX

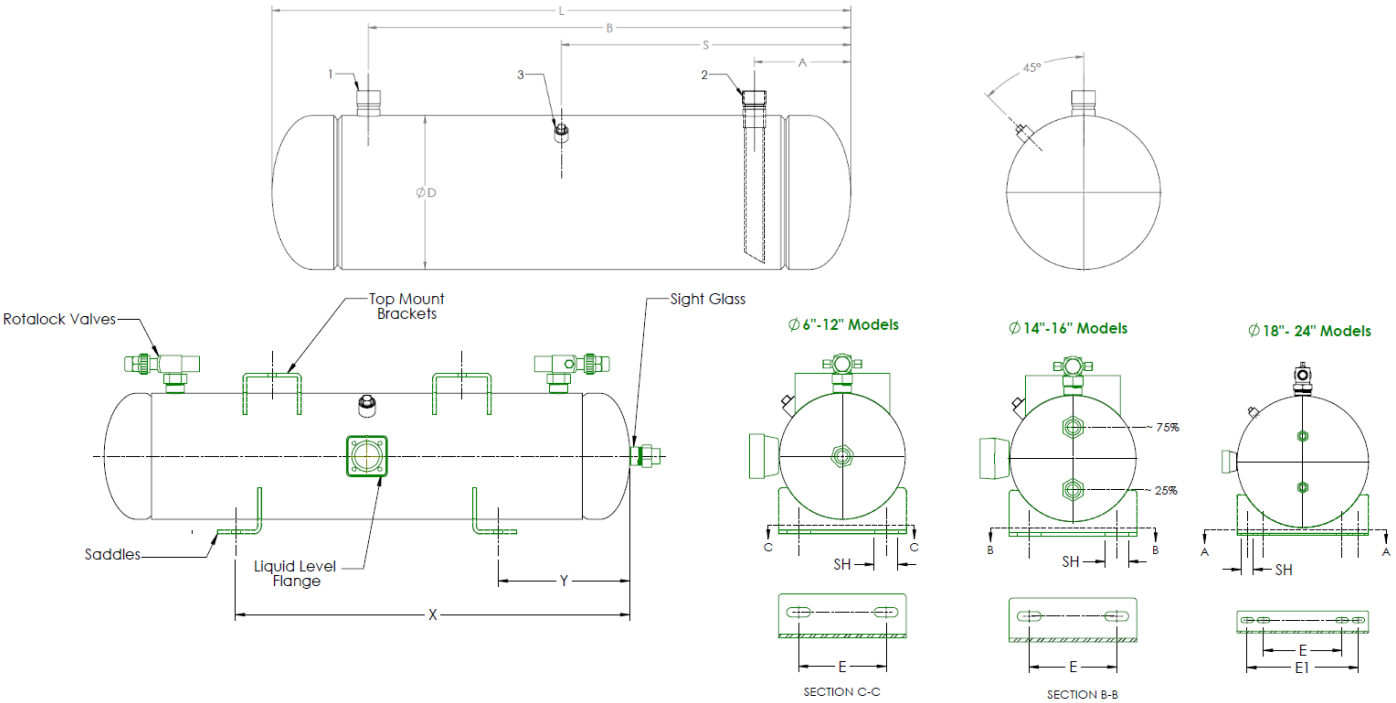

BV0007NL-XXX .. BV0224NL-XXX
BV0007NK-XXX .. BV0224NK-XXX

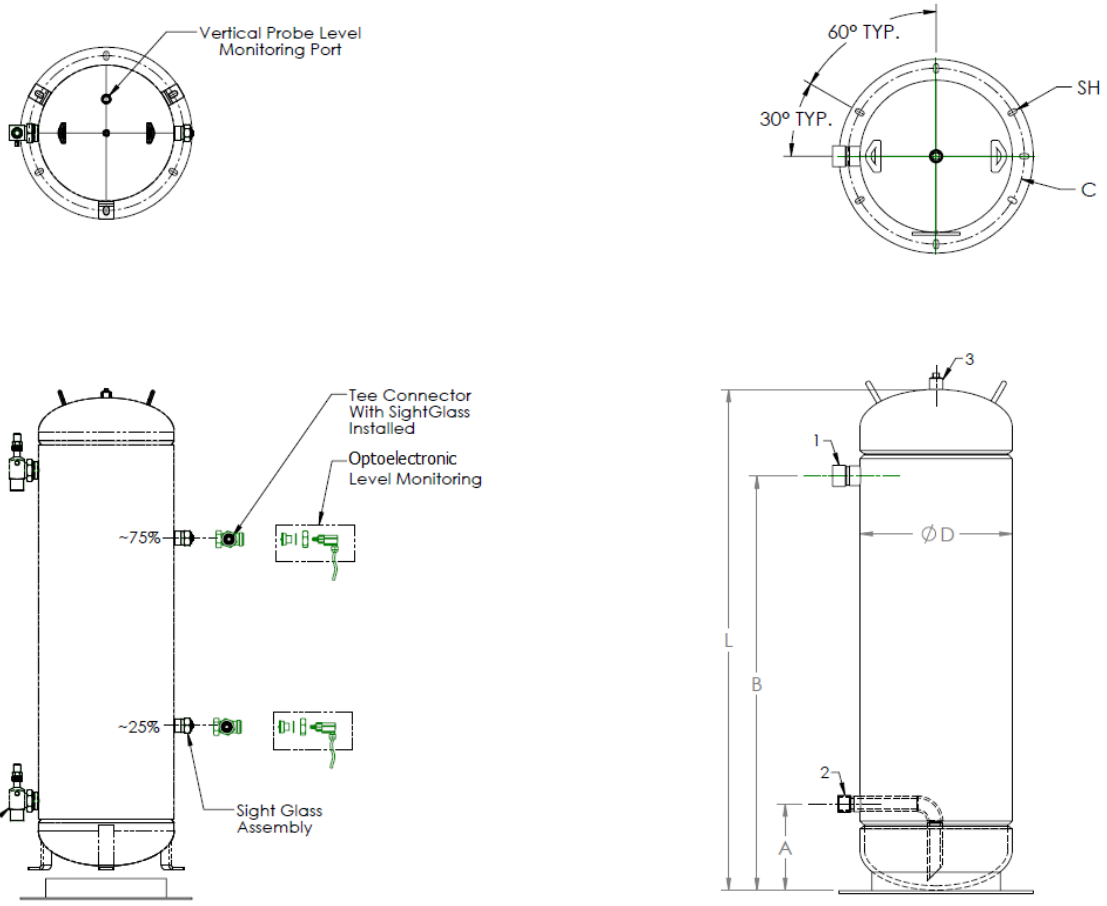

Compressor Mounting Kits

BITZER's BVH models can be fitted with receiver mounting kits for use with our semi-hermetic reciprocating compressors. Please contact our application engineering department for assistance with sizing and selection

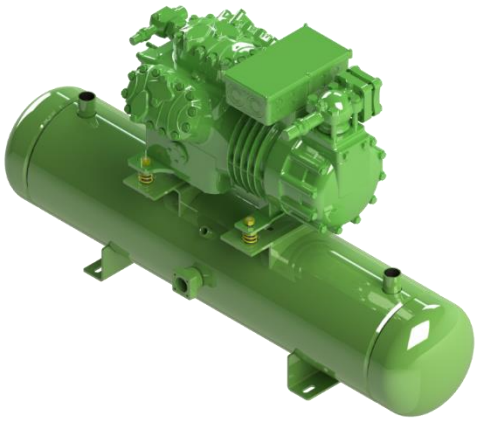

MODEL	Compressor Series	Global Compressor Model	Part Number
BH0014X(L/K)-XXX	CE1	2KES-05 .. 2FES-3	P000000599
	CE2	2EES-2 .. 2CES-4	P000000600
	CE3	4FES-3 .. 4CES-9	P000000600
BH0017X(L/K)-XXX	CE1	2KES-05 .. 2FES-3	P000000599
	CE2	2EES-2 .. 2CES-4	P000000600
	CE3	4FES-3 .. 4CES-9	P000000600
BH0030X(L/K)-XXX	CE3	4FES-3 .. 4CES-9	P000000605
BH0035X(L/K)-XXX	CE3	4FES-3 .. 4CES-9	P000000605
	CE4	4VE(S)-6 .. 4NE(S)-20	P000000606
BH0041X(L/K)-XXX	CE3	4FES-3 .. 4CES-9	P000000605
	CE4	4VE(S)-6 .. 4NE(S)-20	P000000606
BH0051X(L/K)-XXX	CE3	4FES-3 .. 4CES-9	P000000605
	CE4	4VE(S)-6 .. 4NE(S)-20	P000000606
BH0062X(L/K)-XXX	CE3	4FES-3 .. 4CES-9	P000000605
	CE4	4VE(S)-6 .. 4NE(S)-20	P000000606
BH0046X(L/K)-XXX	-	-	-
BH0063X(L/K)-XXX	CE4	4VE(S)-6 .. 4NE(S)-20	P000000607
	BE5	4JE .. 4GE23,4FE25(only)	P000000608
	BE5	4GE30, 4FE28 .. 4FE35(only)	P000000611
BH0078X(L/K)-XXX	CE4	4VE(S)-6 .. 4NE(S)-20	P000000607
	BE5	4JE .. 4GE23, 4FE25 (only)	P000000608
	BE5	4GE30, 4FE28 .. 4FE35 (only)	P000000611
	BE6	6JE-22 .. 6FE-50	P000000611
BH0095X(L/K)-XXX	CE4	4VE(S)-6 .. 4NE(S)-20	P000000607
	BE5	4JE .. 4GE23, 4FE25 (only)	P000000608
	BE5	4GE30, 4FE28 .. 4FE35 (only)	P000000611
	BE6	6JE-22 .. 6FE-50	P000000611
BH0111X(L/K)-XXX	CE4	4VE(S)-6 .. 4NE(S)-20	P000000607
	BE5	4JE .. 4GE23, 4FE25 (only)	P000000608
	BE5	4GE30, 4FE28 .. 4FE35 (only)	P000000611
	BE6	6JE-22 .. 6FE-50	P000000611
BH0127X(L/K)-XXX	CE4	4VE(S)-6 .. 4NE(S)-20	P000000607
	BE5	4JE .. 4GE23, 4FE25 (only)	P000000608
	BE5	4GE30, 4FE28 .. 4FE35 (only)	P000000611
	BE6	6JE-22 .. 6FE-50	P000000611
BH0084X(L/K)-XXX	CE4	4VE(S)-6 .. 4NE(S)-20	P000000607
BH0106X(L/K)-XXX	CE4	4VE(S)-6 .. 4NE(S)-20	P000000607
	BE5	4JE .. 4GE23, 4FE25 (only)	P000000608
	BE5	4GE30, 4FE28 .. 4FE35 (only)	P000000611
	BE6	6JE-22 .. 6FE-50	P000000611
BH0129X(L/K)-XXX	CE4	4VE(S)-6 .. 4NE(S)-20	P000000607
	BE5	4JE .. 4GE23, 4FE25 (only)	P000000608
	BE5	4GE30, 4FE28 .. 4FE35 (only)	P000000611
	BE6	6JE-22 .. 6FE-50	P000000611
BH0173X(L/K)-XXX	CE4	4VE(S)-6 .. 4NE(S)-20	P000000607
	BE5	4JE .. 4GE23, 4FE25 (only)	P000000608
	BE5	4GE30, 4FE28 .. 4FE35 (only)	P000000611
	BE6	6JE-22 .. 6FE-50	P000000611

*Please note that the BE5 compressor series is divided between the 4JE ..4GE23, 4FE25 compressors and the 4GE30, 4FE28 .. 4FE35 compressors.

Capabilities

BITZER's ASME factory is located in the southeast transportation hub, Georgia, and has the capability to manufacture vessels for different applications and industries. Custom vessels, including, but not limited to high pressure vessels (max 3000 PSI), flash tanks, surge drums, recirculators, filter housings, water tanks, oil separators and intercoolers are designed to satisfy the customer's need. Please contact Customer Service in your region for all your custom inquires.

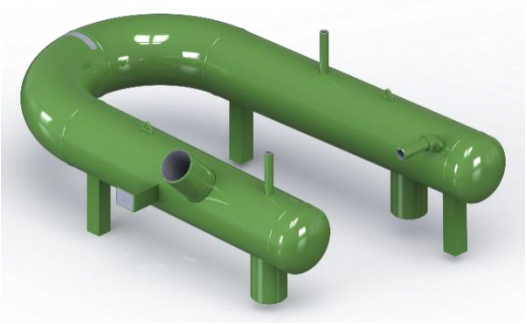

12" U-Tube Surge Drum

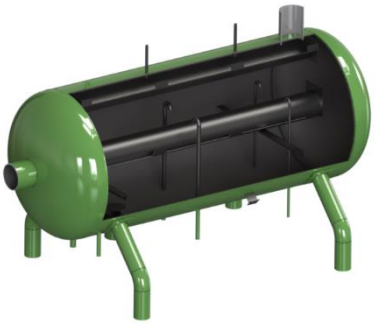

60" Ammonia Recirculator



28" CO2 Flash Gas Receiver w/ HX

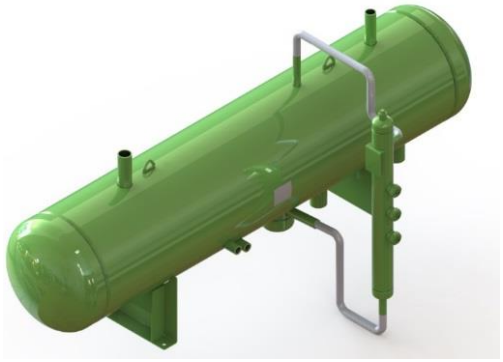

36" Ammonia Receiver



8" Desiccant Air Dryer



30" Ammonia Thermosyphon Receiver

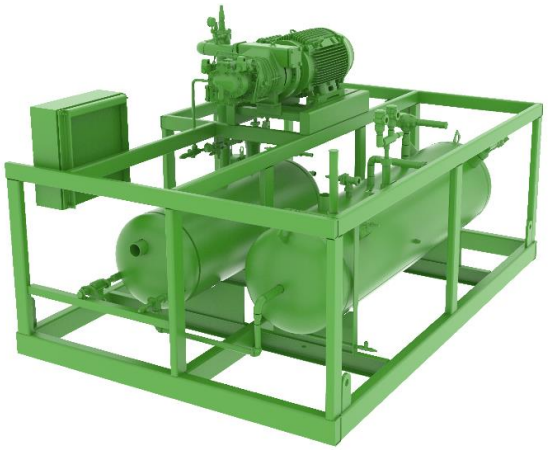

Custom designed vessels for refrigeration packages

BITZER U.S., Inc.
4080 Enterprise Way // Flowery Branch, GA //30542 USA
Phone: (770) 503 9226 // Fax: (770) 503 9440
sales@bitzerus.com // www.bitzerus.com

BITZER Canada, Inc.
21125 Daoust Street // Sainte-Anne-De-Bellevue, Quebec // H9X 0A3 Canada
Phone: (514) 697 3363 // Fax: (514) 697 9768
www.bitzer.ca

BITZER México, S. de R.L. de C.V. Av. Adolfo López Mateos 221 Bodega 9 Col. Victoria // Guadalupe, N.L. // 67110
México Phone: +52 (81) 1522 4500 // Fax: +52 (81) 1522 4505
ventas@bitzermexico.com // www.bitzermexico.com

BITZER Latin America colombia@bitzerus.com // ecuador@bitzerus.com // puertorico@bitzerus.com // caribe@bitzerus.com centroamerica@bitzerus.com // venezuela@bitzerus. // www.bitzerus.com

Subject to change // Susceptibles d'être modifiées // Sujeto a cambios // 07.2019