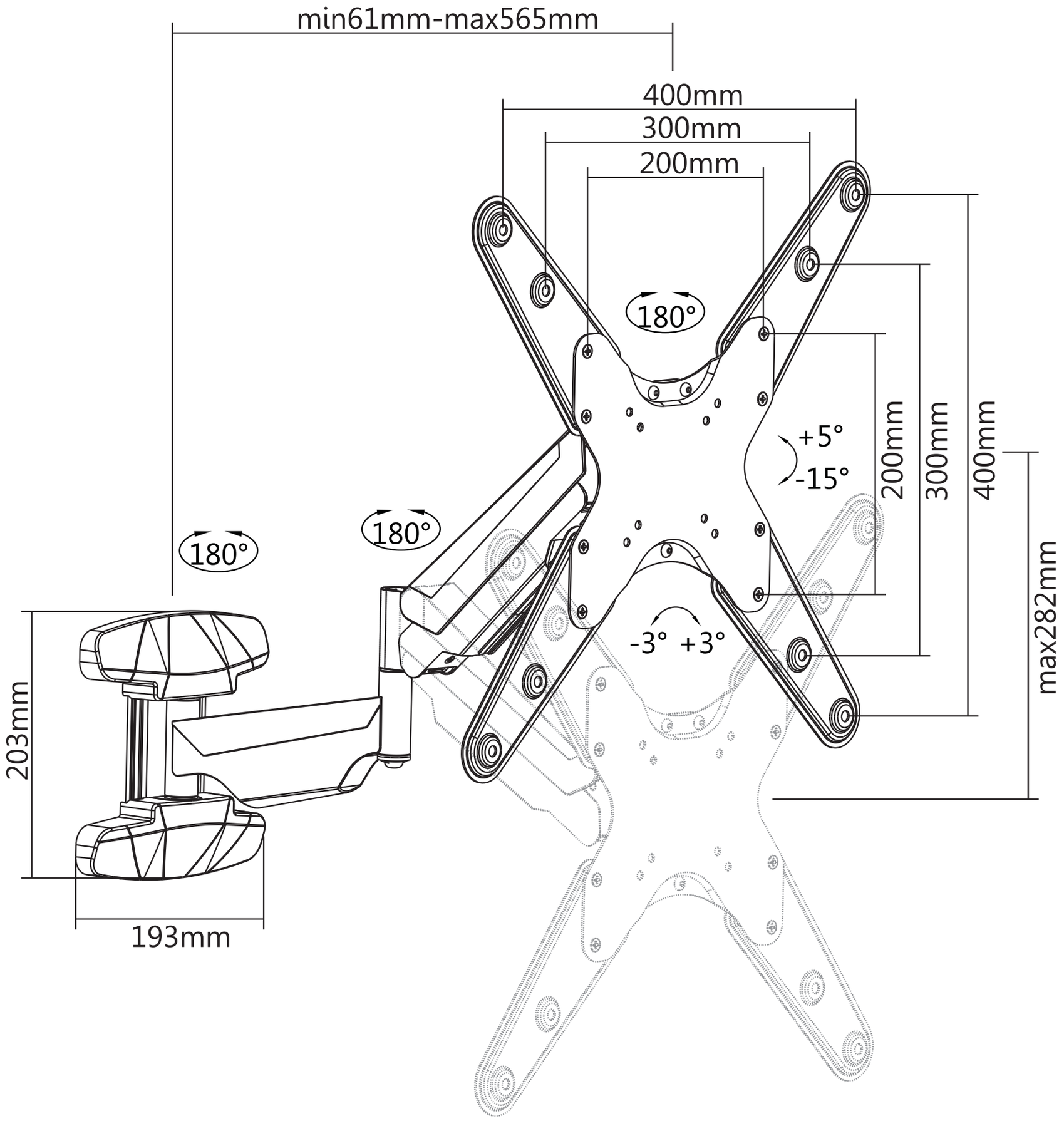
min61mm-max565mm
400mm
300mm
200mm
180°
180°
180°
+5°
-15°
200mm
300mm
400mm
max282mm
-3° +3°
203mm
193mm