由 Autodesk 教育版产品制作

REV.	DESCRIPTION	ENG.	APPROVAL

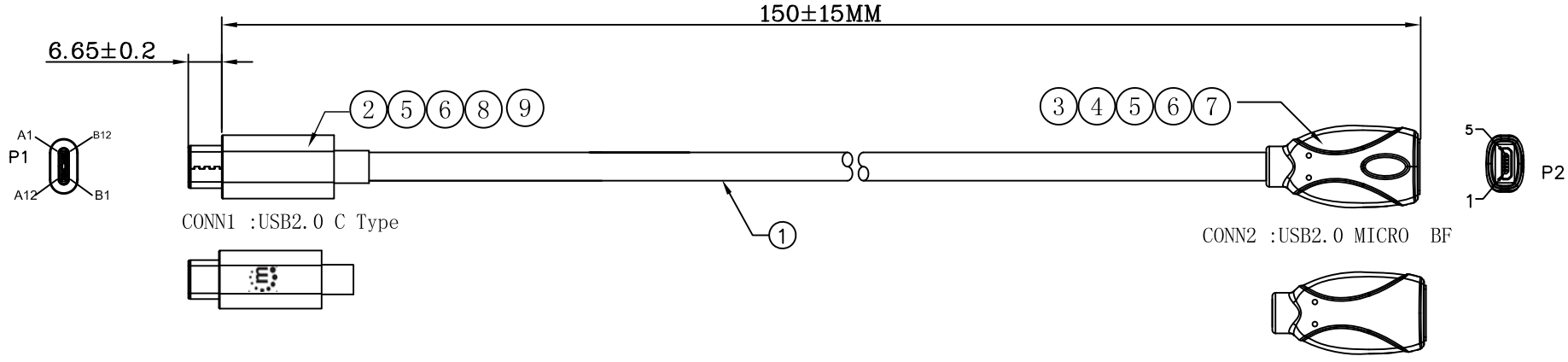

Electrical Test:

1. 100%Test(Open ,short ,miss wire)
2. Contact Resistance: 2 ohm max.
3. Insulation Resistance: 100M ohm Min.
4. Hi-Pot: 300VDC/10ms.

TYPE-C PCB pictorial view:

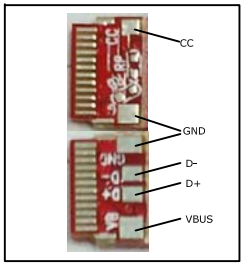

Pin Assignment

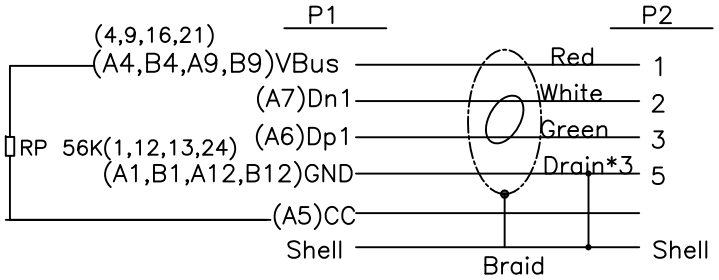

NO	CELINK P/N	DESCRIPTION	Q'TY	UNIT
9		Copper Foil:W=5MM 25u		pcs
8		USB TYPE C~n Back Nickel Plated Shell~(OD2.7~3.2MM)	1	pcs
7		USB TYPE C~n Front Nickel Plated Shell~(OD2.7~3.2MM)	1	pcs
6		H.S.T ⌀1.0 BLACK	1	pcs
5		USB 2.0 C Type Connector Black Insulation Nickel Plated Shell With PCBA(Resistance56KΩ)	1	pcs
4		Outside Molding 45P PVC BLACK	16	g
3		Intside Molding: PE	4	g
2		USB2.0 MICRO BF SOLDER INSULATION:BLACK SHELL NICKEL PLATED	1	Set
1		NO-UL30AWG(19/0.06TC)*2C+24AWG(26/0.11TC+250Dnylon)+3E(19/0.05TC+250Dnylon)+AB(16/9/0.06TC 95%) OD:3.0MM Color:BLACK no mark	0.142	m

THESE DRAWINGS AND SPECIFICATIONS ARE THE PROPERTY OF INTRACOM Asia Co.,Ltd. AND SHALL NOT BE REPRODUCED COPIED OR USED IN ANY MANNER WITHOUT THE PRIOR WRITTEN CONSENT OF INTRACOM Asia Co.,Ltd.

UNLESS OTHERWISE SPECIFIED:DIMENSIONS ARE IN MILLIMETERS ANGULAR TOLERANCE:±1°

TOLERANCE(INCH)		TOLERANCE(MM)	
x	±0.02"	x	±0.5mm
x.x	±0.01"	x.x	±0.20mm
x.xx	±0.008"	x.xx	±0.15mm
x.xxx	±0.005"	x.xxx	±0.10mm

INTRACOM 安達康股份有限公司 INTRACOM Asia Co.,LTD.

TITLE: MH Mic USB2.0 Cbl Micro BF-CM,Black,15cm	APPD				
	Check				
CUSTOMER:	Drawer	limin		Date 16.03.02	
CUSTOMER P/N: 353335	Unit	mm	Projection		
ICT P/N:	Scale	1:1	Size.	A4	
DWG.NO:	Sheet	1 of	REV.	A06	

THIS DRAWING MAY BE USED IN WHOLE OR PART

由 Autodesk 教育版产品制作
由 Autodesk 教育版产品制作
由 Autodesk 教育版产品制作