BELIEF



=REASONABLE


Apologetics series
“Giving an account for the hope”
11.12.23

Apologetics Series

1. Apologetics Introduction (Dave W)
2. God: His Existence (Kirk B)
3. Man: Created in God's Image (Dan K)
4. The Veracity of the Bible: Transmission and Cannon (Bob J), Prophecy (James A)
5. Jesus: Historicity and Deity (Sam W), Resurrection (Dan K)
6. Truth: Epistemology (Rick D)
7. Morality (Seung O)
8. Weekend Seminar (Steve Caldwell): Human Sexuality, Special Message
9. The Problem of Pain, Suffering and Injustice (Jim Fleming)
10. The Positive Impact of a Biblical World View (Gabe)
11. Giving an Account of our Hope (David Johns)



Apologetics Series

1. Apologetics Introduction (Dave W)
2. God: His Existence (Kirk B)
3. Man: Created in God's Image (Dan K)
4. The Veracity of the Bible: Transmission and Cannon (Bob J), Prophecy (James A)
5. Jesus: Historicity and Deity (Sam W), Resurrection (Dan K)
6. Truth: Epistemology (Rick D)
7. Morality (Seung O)
8. Weekend Seminar (Steve Caldwell): Human Sexuality, Special Message
9. The Problem of Pain, Suffering and Injustice (Jim Fleming)
10. Giving an Account of our Hope (David Johns)
11. The Positive Impact of a Biblical World View (Gabe)



The defense of the gospel

1 Pet 3:15 but sanctify Christ as Lord in your hearts, always being *ready to make a defense to everyone* who asks you to give an account for the hope that is in you, yet with gentleness and reverence;



Phil 1:7 For it is only right for me to feel this way about you all, because I have you in my heart, since both in my imprisonment and in the *defense and confirmation of the gospel,* you all are partakers of grace with me.

Phil 1:16 the latter do it out of love, knowing that I am appointed *for the defense of the gospel;*

2 Tim 4:16 At my first *defense* no one supported me, but all deserted me; may it not be counted against them.



1 Pet 3:15 but sanctify Christ as Lord in your hearts, always being *ready to make a defense to everyone* who asks you to give an account for the hope that is in you, yet with gentleness and reverence;

"apologia"

Defending the gospel is an act of obedience



To be a good defender of the gospel…

1

1 Pet 3:15 but sanctify Christ as Lord in your hearts,

always being ready to make a defense to everyone who

asks you to give an account for the hope that is in you, yet

with gentleness and reverence;

2



To be a good defender of the gospel…

1. Sanctify Christ as Lord in your heart
2. Always be ready
    i. to share personal stories
    ii. to answer common questions



- Rev. 1:17 *When I saw Him, I fell at His feet like a dead man. And He placed His right hand on me, saying, "Do not be afraid; I am the first and the last,*
- Rev. 1:18 *and the living One; and I was dead, and behold, I am alive forevermore, and I have the keys of death and of Hades.*
- Mark 2:10 *"But so that you may know that the Son of Man has authority on earth to forgive sins"*
- John 8:58 *Jesus said to them, "Truly, truly, I say to you, before Abraham was born, I am."*

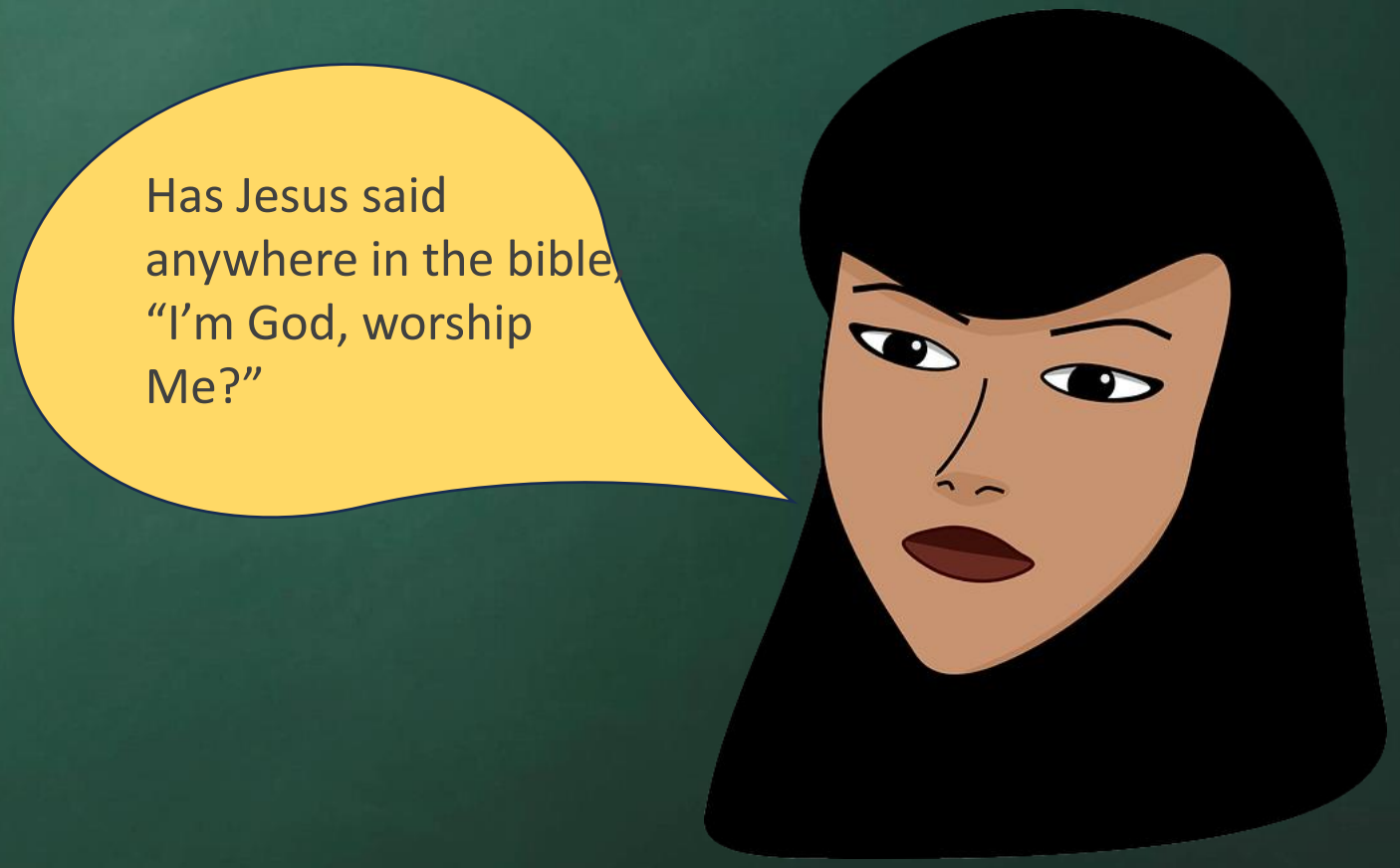

- Trinitarianism is NOT polytheism
- The attribute of eternal love demands a Triune God
- The Bible teaches that God is one and in three persons (Father, Son and the Holy Spirit)



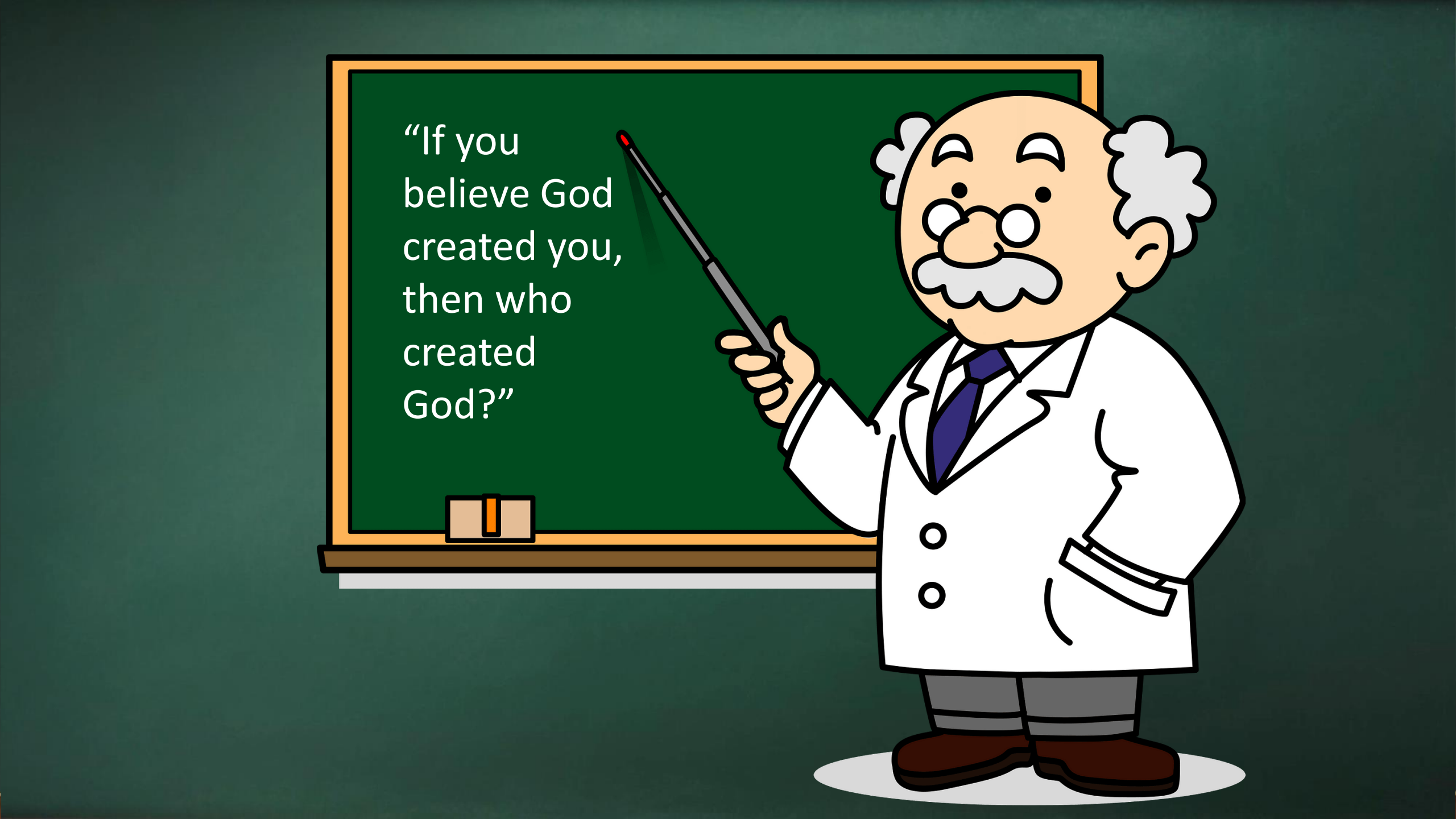
“If you believe God created you, then who created God?”

Common questions/statements…

1. “It’s not rational to believe in God”
2. ”The OT God is an evil monster”
3. “If that works for you, good; but it’s not for me”
4. “You cannot believe the gospel writers, they are biased”
5. “The gospels have changed”
6. “Faith cannot be evidence based”
7. ”All religions lead to God”



To be a good defender of the gospel…

1. Sanctify Christ as Lord in your heart
2. Always be ready
    i. to share personal stories
    ii. to answer common questions
    iii. to ask good questions



Columbo questions





Columbo Question #1

What do you mean by that? (or some variation)



Columbo Question #2

How did you come to that conclusion?



Columbo question #3

Ask leading questions



To be a good defender of the gospel…

1

1 Pet 3:15 but sanctify Christ as Lord in your hearts,

always being ready to make a defense to everyone who

asks you to give an account for the hope that is in you, yet

with gentleness and reverence;

2

3




P
R
N
S
D
+
-
HOLD
AUTO
EV
CHG HOLD
ECO
PUSH
NORMAL
TRAIL

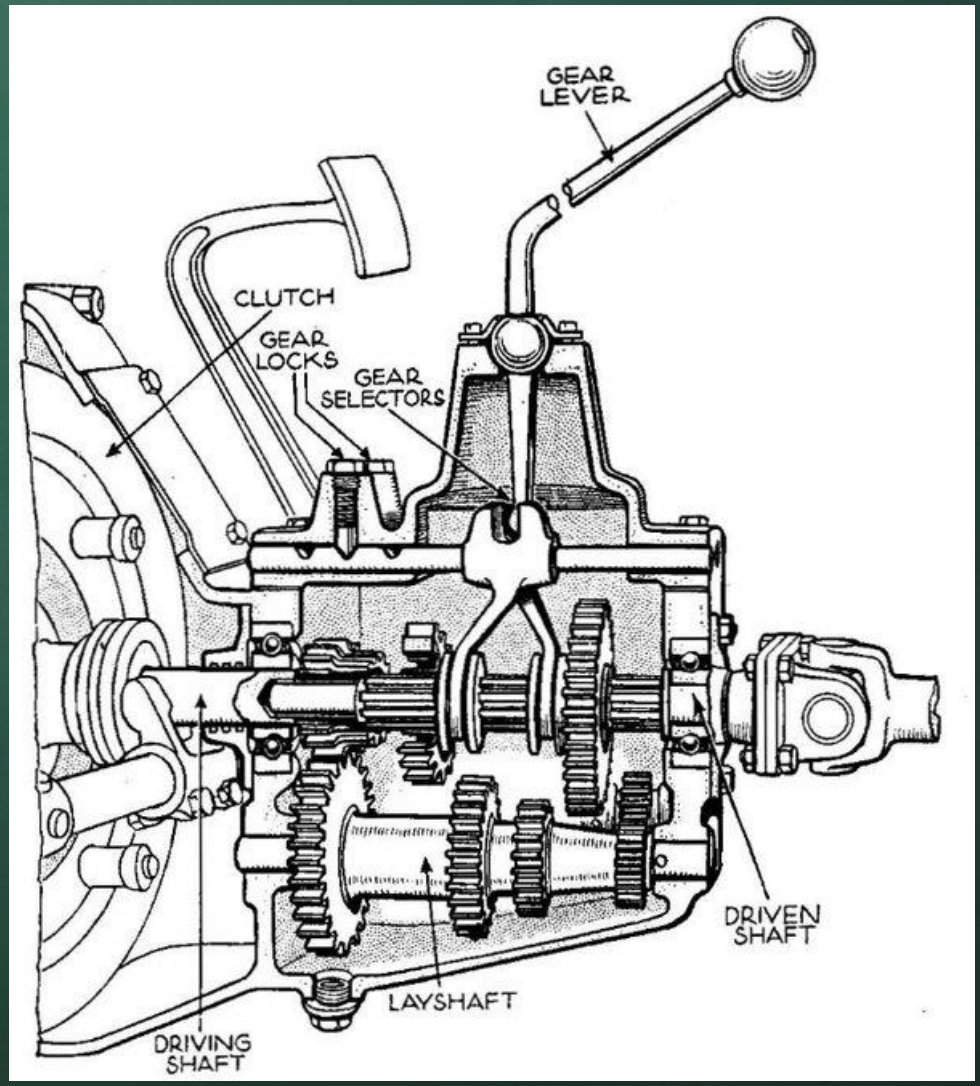
GEAR
LEVER
CLUTCH
GEAR
LOCKS
GEAR
SELECTORS
DRIVEN
SHAFT
LAYSHAFT
DRIVING
SHAFT

2 Tim 1:7, “For God has not given us a spirit of timidity, but of power and love and discipline.”