ALL WORK SHALL BE CONSTRUCTED IN ACCORDANCE WITH THE LATEST EDITION OF THE E.C.U.A. STANDARD SPECIFICATIONS

240-208V 3ø 1HP - 20HP VARIABLE FREQUENCY DRIVE ELECTRICAL STANDARD

FOR

EMERALD COAST UTILITIES AUTHORITY
ESCAMBIA COUNTY, FL

SHEET NO.	SHEET DESCRIPTION
1	MAIN POWER DISTRIBUTION SCHEMATIC
2	CONTROL SCHEMATIC
3	DIGITAL INPUTS SCHEMATIC
4	DIGITAL OUTPUTS & ANALOG INPUTS SCHEMATIC
5	ANALOG OUTPUTS & STARTER CONTROL SCHEMATIC
6	TERMINAL BLOCK LAYOUT AND FIELD CONNECTIONS
7	LINEAR EXTERIOR PANEL LAYOUT & FIELD CONDUIT REQUIREMENTS
8	POWER & PUMP 1 INTERNAL PANEL LAYOUTS
9	PUMP 2 & CONTROL PANEL INTERNAL LAYOUTS
10	EQUIPMENT LIST
11	HORSEPOWER RELATED EQUIPMENT & POWER CONDUCTORS
12	PANEL TO PANEL CONDUCTORS & EQUIPMENT
13	PANEL TO PANEL WIRING
14	LINEAR STAINLESS STEEL FRAME LAYOUT
15	TABLES, LEGENDS & TAGS
16	ISR INSTRUCTIONS
17	GENERAL NOTES AND DETAILS
18	GENERAL NOTES AND DETAILS

REVISIONS	BY

IMPROVEMENTS TO WASTEWATER COLLECTION SYSTEM

LIFT STATION CONSTRUCTION DETAILS

ELECTRICAL STANDARDS

EMERALD COAST UTILITIES AUTHORITY

APPROVED BY:

Drawn:

Designed:

Checked:

Date: 12/18/2014

Scale:

Project No:

Sheet No. 0

Of 18 Sheets

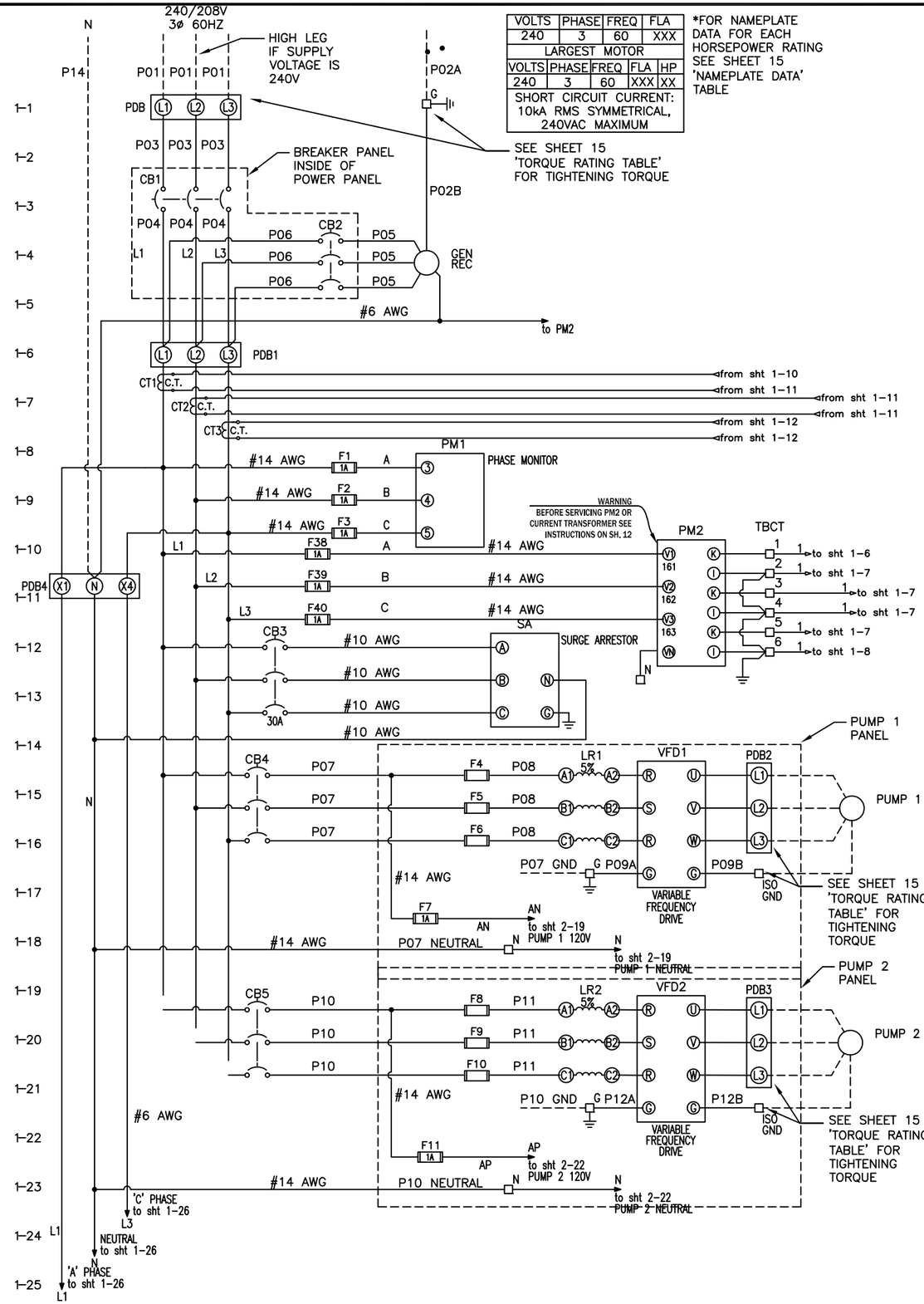

VOLTS	PHASE	FREQ	FLA
240	3	60	XXX
LARGEST MOTOR			
VOLTS	PHASE	FREQ	FLA	HP
240	3	60	XXX	XX
SHORT CIRCUIT CURRENT: 10kA RMS SYMMETRICAL, 240VAC MAXIMUM				

*FOR NAMEPLATE DATA FOR EACH HORSEPOWER RATING SEE SHEET 15 'NAMEPLATE DATA' TABLE

ALL WORK SHALL BE CONSTRUCTED IN ACCORDANCE WITH THE LATEST EDITION OF THE E.C.U.A. STANDARD SPECIFICATIONS

NOTES:

1. THE COMPLETED CONTROL PANEL SHALL BE LABELED AND MANUFACTURED TO MEET U.L. 508A AND 698A CERTIFICATION.
2. CONTROL PANEL WIRING SHALL BE STRANDED COPPER, MINIMUM SIZE #16 AWG WITH 600V 90DEGREE C TYPE THHN INSULATION.
3. CONTROL PANEL WIRING SHALL BE NUMBERED AT BOTH ENDS WITH TYPE WRITTEN, HEAT SHRINKABLE WIRE MARKERS.
4. ALL WIRING WITHIN THE CONTROL PANEL SHALL BE COLOR CODED OR CODED USING ELECTRICAL TAPE IN SIZES WHERE COLORED INSULATION IS NOT AVAILABLE. THE FOLLOWING CODING SHALL BE USED:
   - 4.1. UNGROUNDED AC CONDUCTORS AT SUPPLY VOLTAGE – BLACK
   - 4.2. GROUNDED AC CURRENT CARRYING CONDUCTORS – WHITE
   - 4.3. UNGROUNDED AC CONDUCTORS BELOW SUPPLY VOLTAGE – RED
   - 4.4. UNGROUNDED AC CONTROL CONDUCTORS & CONDUCTORS THAT REMAIN ENERGIZED WHEN THE MAIN DISCONNECT IS OFF – YELLOW
   - 4.5. UNGROUNDED DC CONTROL CONDUCTORS – ORANGE
   - 4.6. GROUNDED DC CURRENT CARRYING CONDUCTORS – BROWN
   - 4.7. INTRINSICALLY SAFE WIRING – BLUE
   - 4.8. GROUND CONDUCTORS – GREEN
5. SEE SHEETS 11 & 12 FOR DETAILS REGARDING ALL POWER CONDUCTORS LABELED PXX.
6. SEE SHEET 11 'HORSEPOWER RELATED COMPONENTS EQUIPMENT LIST' FOR RATINGS OF OVERCURRENT PROTECTION DEVICES.

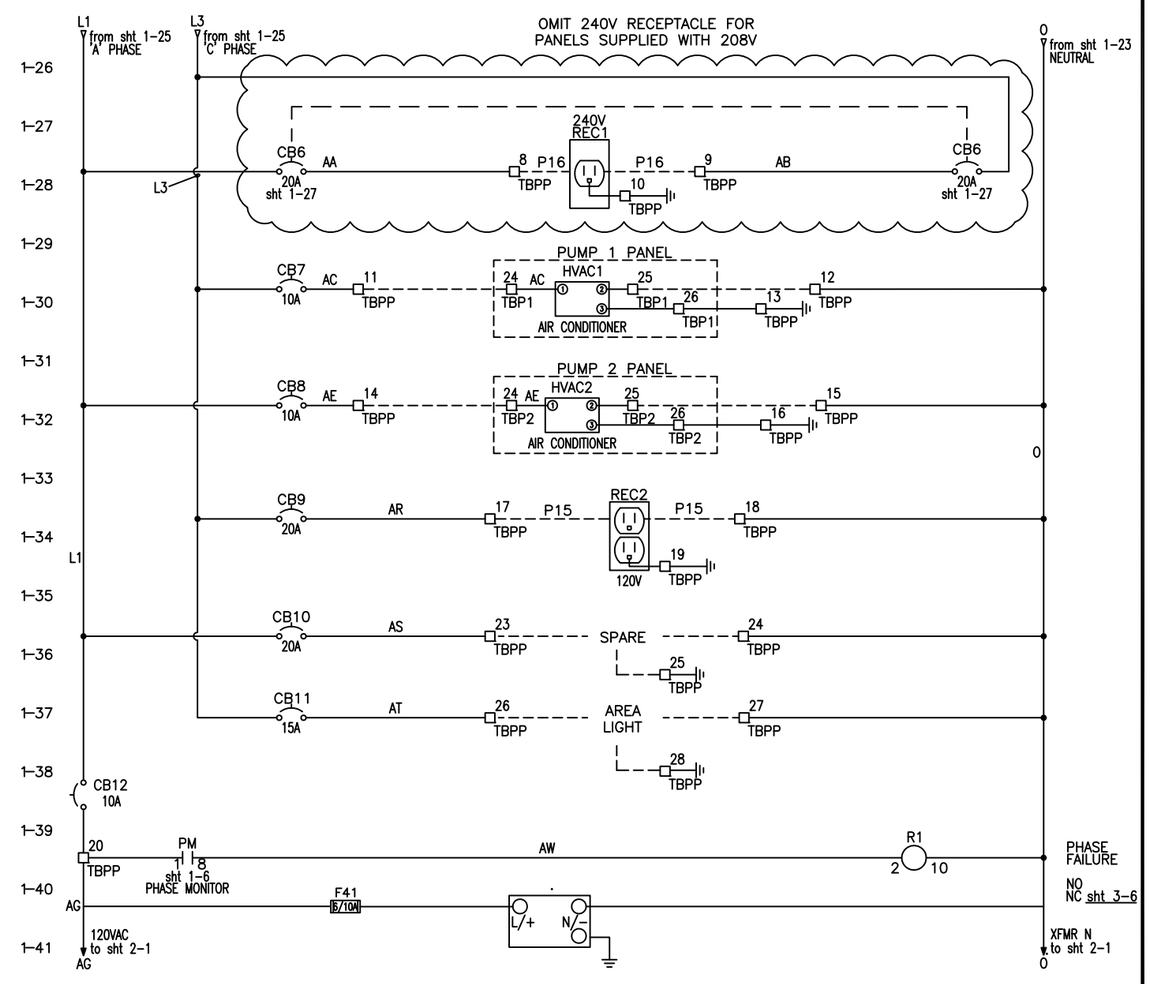

REVISIONS	BY

IMPROVEMENTS TO WASTEWATER COLLECTION SYSTEM

LIFT STATION CONSTRUCTION DETAILS

ELECTRICAL STANDARDS

EMERALD COAST UTILITIES AUTHORITY

APPROVED BY:

Drawn:	
Designed:	
Checked:	
Date:	12/18/2014
Scale:	
Project No:	
Sheet No.	1
	Of 18 Sheets

ALL WORK SHALL BE CONSTRUCTED IN ACCORDANCE WITH THE LATEST EDITION OF THE E.C.U.A. STANDARD SPECIFICATIONS

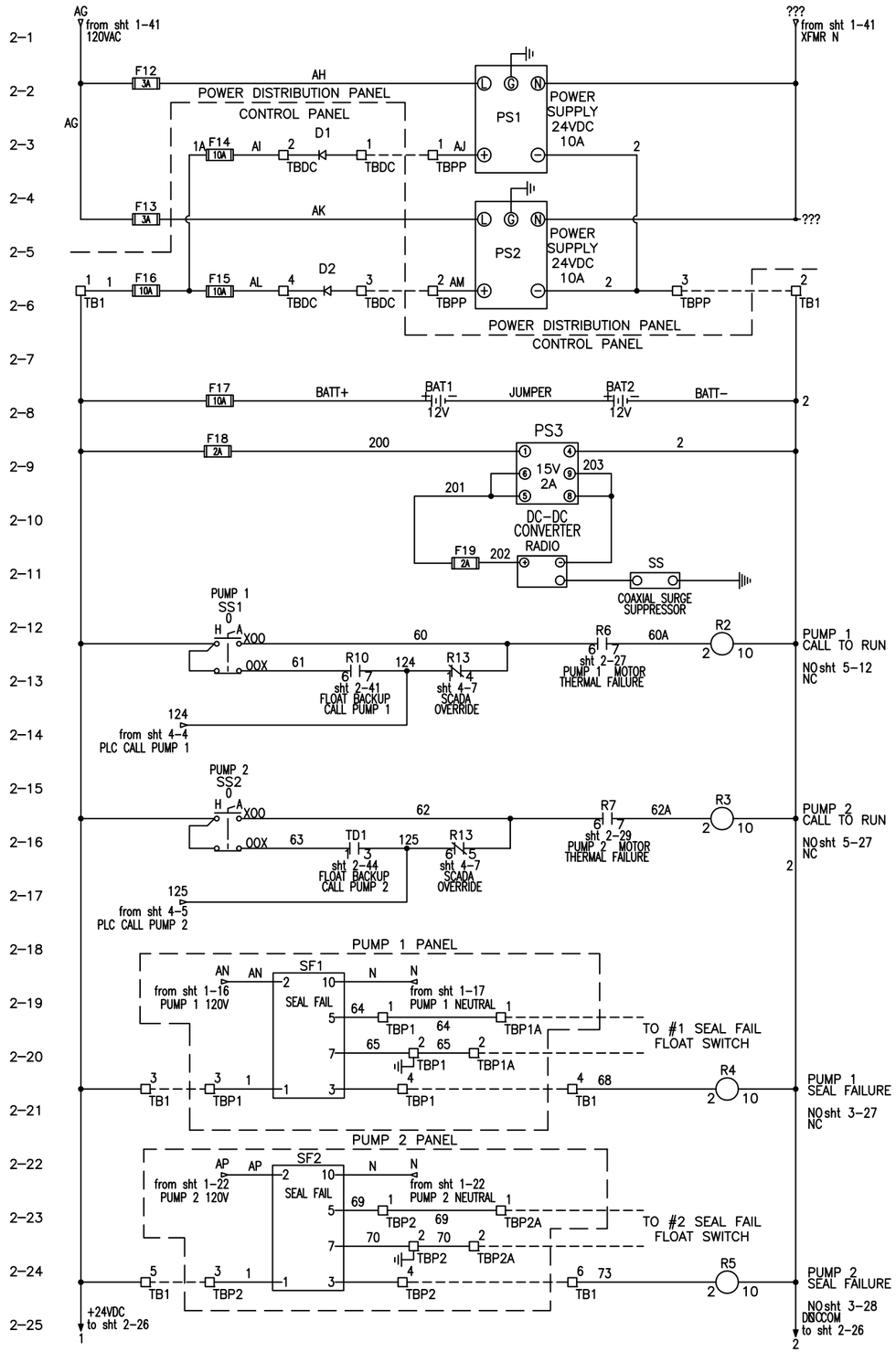

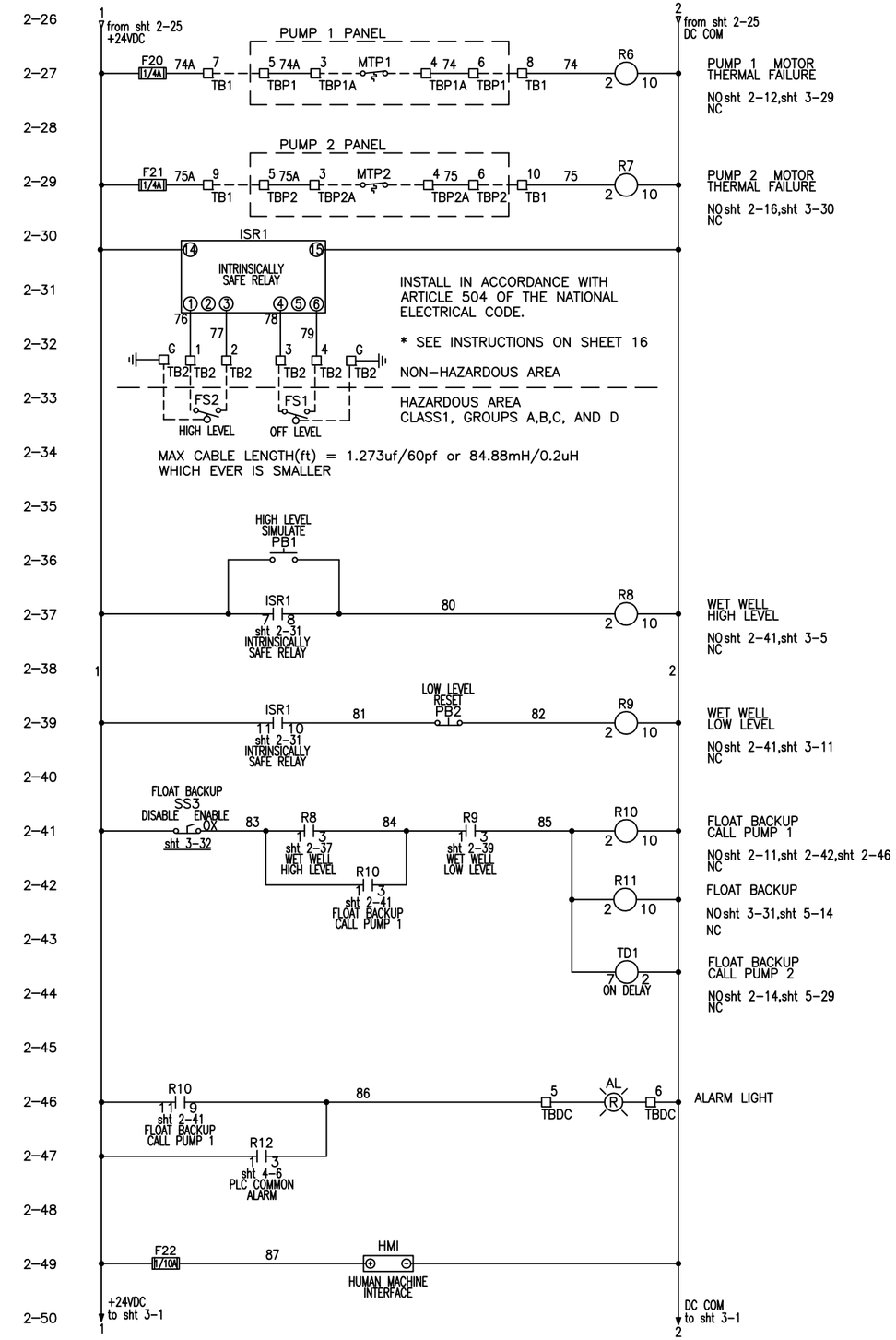

REVISIONS	BY

IMPROVEMENTS TO WASTEWATER COLLECTION SYSTEM
LIFT STATION CONSTRUCTION DETAILS
ELECTRICAL STANDARDS

EMERALD COAST UTILITIES AUTHORITY

APPROVED BY:

Drawn:	
Designed:	
Checked:	
Date:	12/18/2014
Scale:	
Project No:	
Sheet No.	2
	Of 18 Sheets

ALL WORK SHALL BE CONSTRUCTED IN ACCORDANCE WITH THE LATEST EDITION OF THE E.C.U.A. STANDARD SPECIFICATIONS

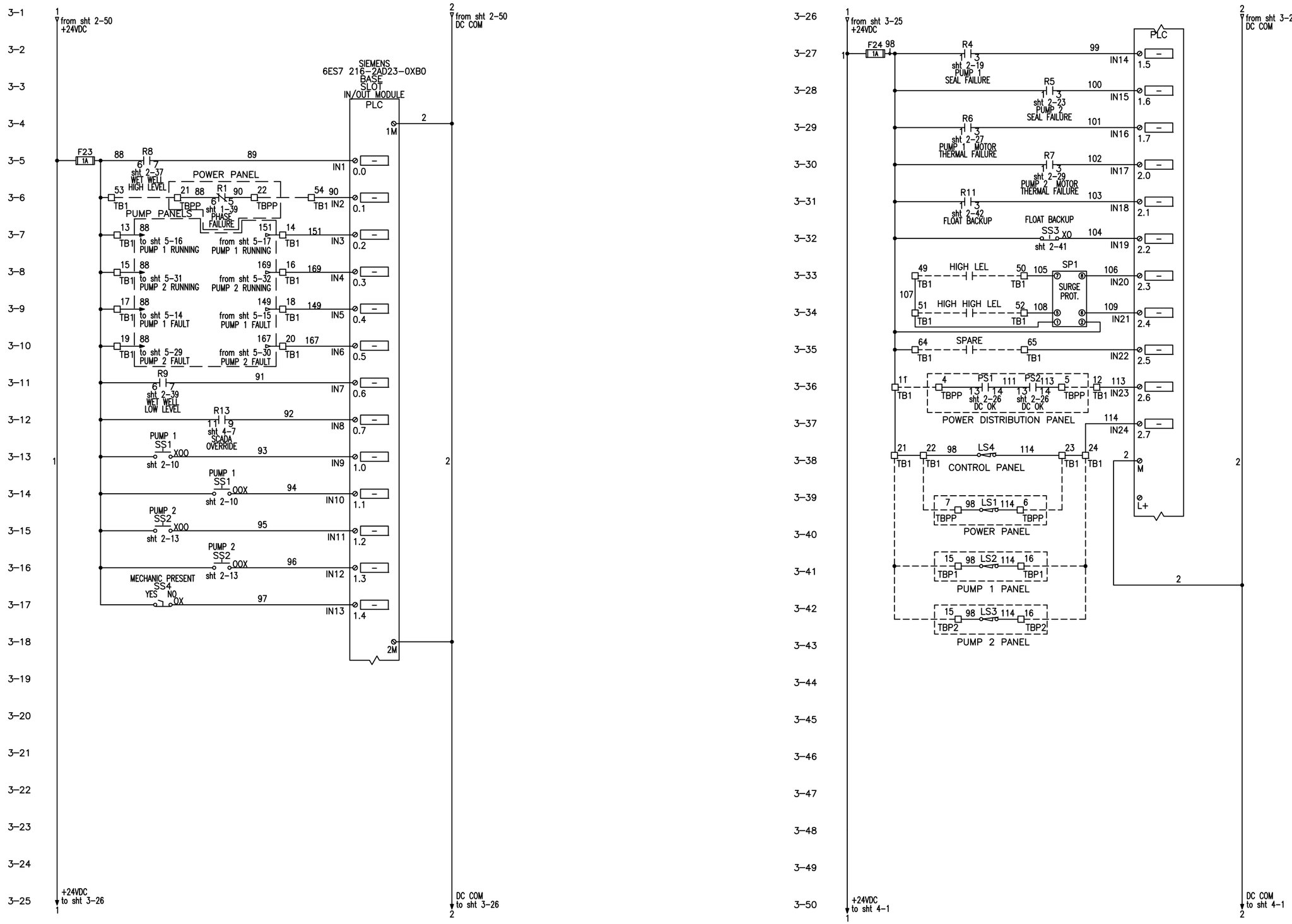

REVISIONS	BY

IMPROVEMENTS TO WASTEWATER COLLECTION SYSTEM

LIFT STATION CONSTRUCTION DETAILS

ELECTRICAL STANDARDS

EMERALD COAST UTILITIES AUTHORITY

APPROVED BY:

Drawn:
Designed:
Checked:
Date: 12/18/2014
Scale:
Project No:
Sheet No. 3
OF 18 Sheets

ALL WORK SHALL BE CONSTRUCTED IN ACCORDANCE WITH THE LATEST EDITION OF THE E.C.U.A. STANDARD SPECIFICATIONS

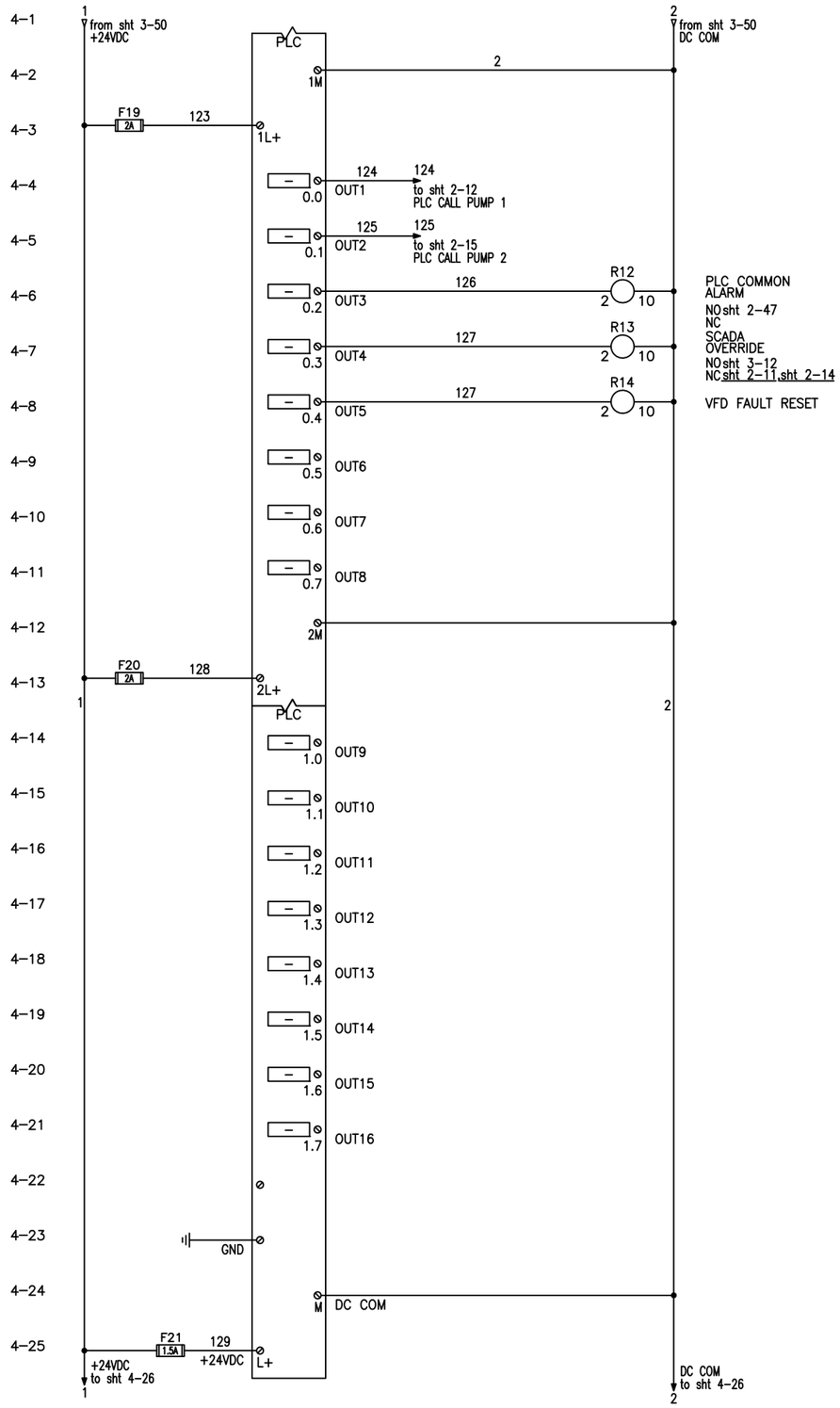

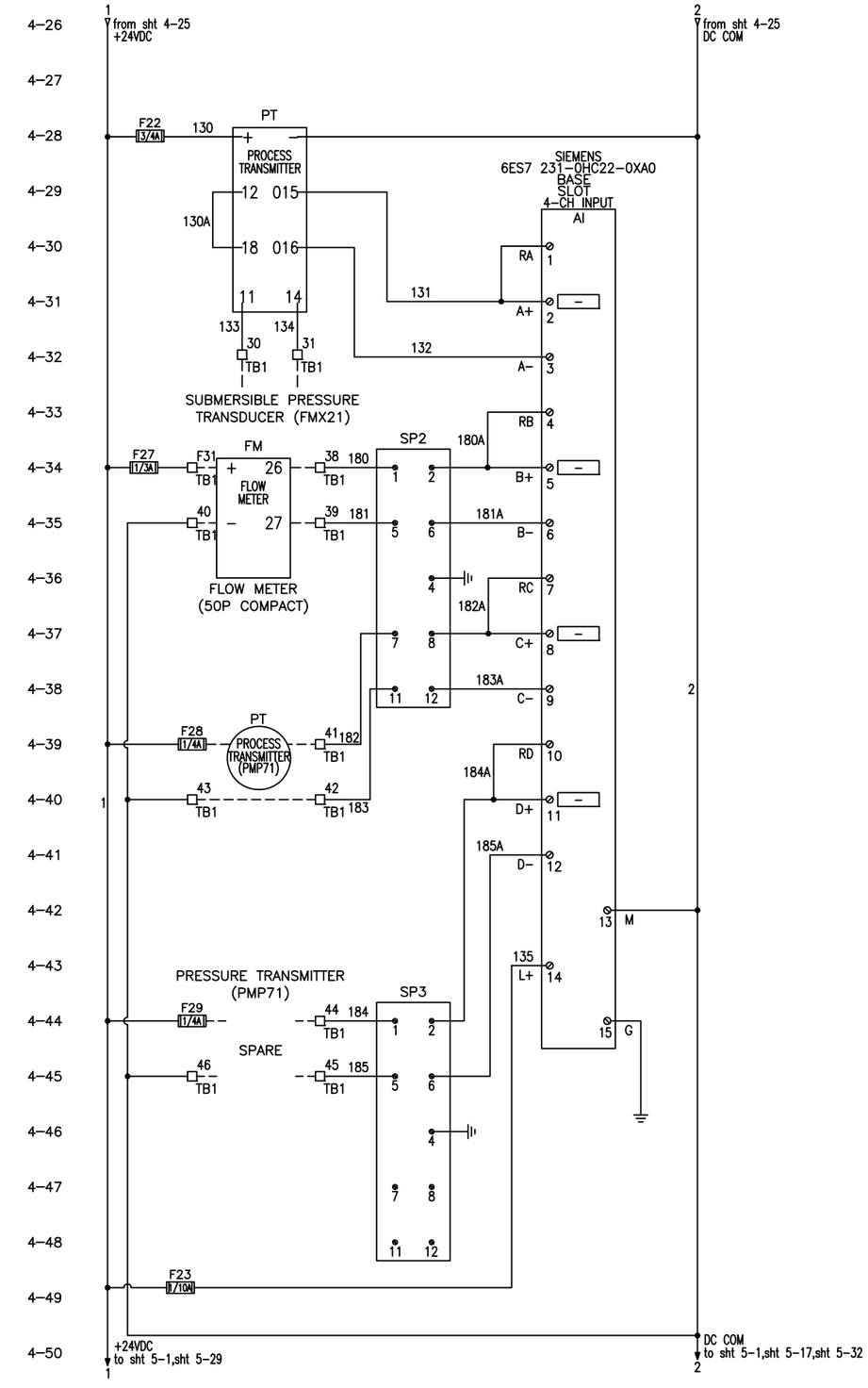

REVISIONS	BY

IMPROVEMENTS TO WASTEWATER COLLECTION SYSTEM

LIFT STATION CONSTRUCTION DETAILS

ELECTRICAL STANDARDS

EMERALD COAST UTILITIES AUTHORITY

APPROVED BY:

Drawn:	
Designed:	
Checked:	
Date:	12/18/2014
Scale:	
Project No:	
Sheet No.	4
	Of 18 Sheets

ALL WORK SHALL BE CONSTRUCTED IN ACCORDANCE WITH THE LATEST EDITION OF THE E.C.U.A. STANDARD SPECIFICATIONS

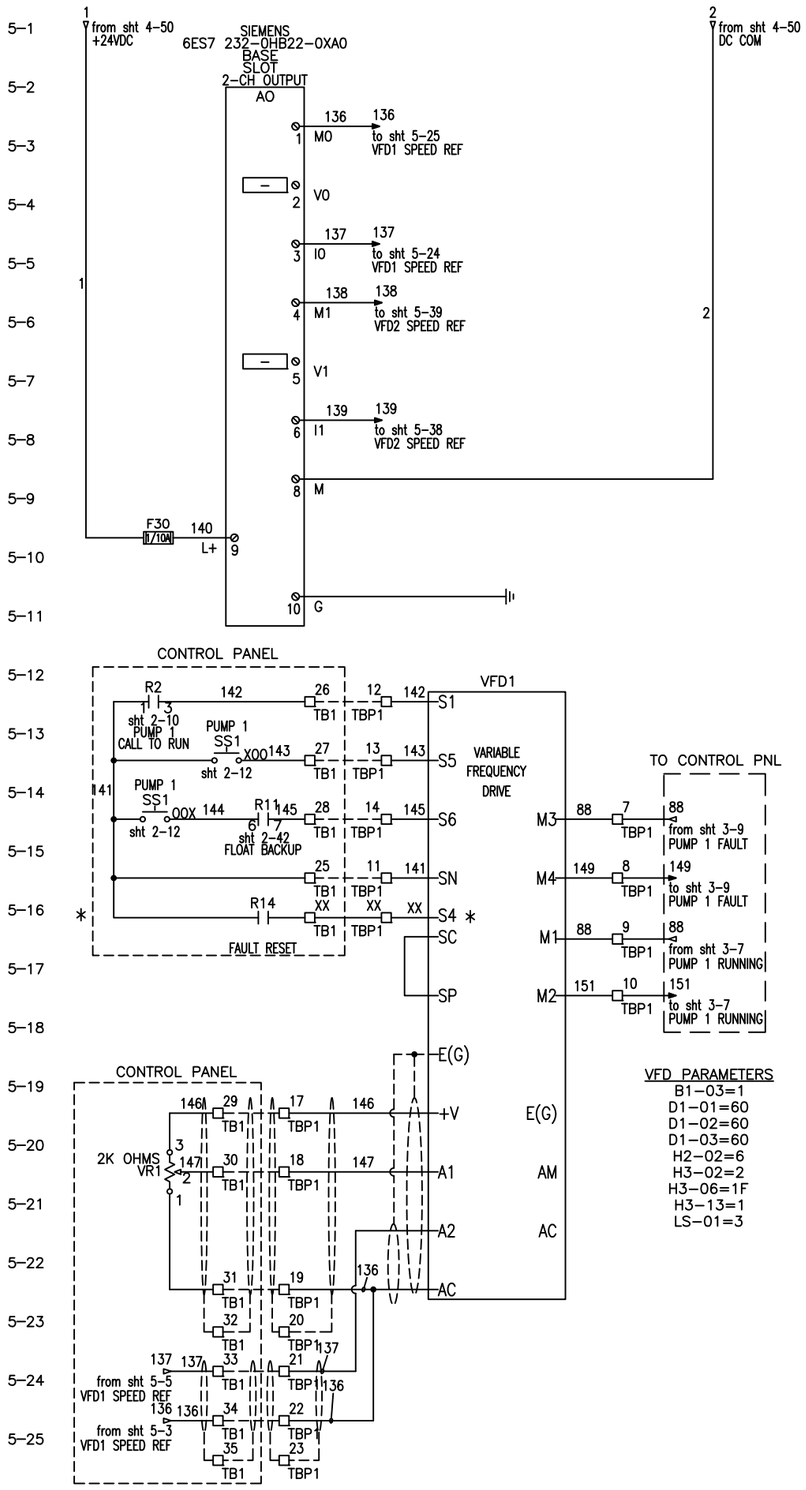

VFD PARAMETERS
B1-03=1
D1-01=60
D1-02=60
D1-03=60
H2-02=6
H3-02=2
H3-06=1F
H3-13=1
LS-01=3

* CONNECTION AT S4 WAS ADDED AND NEEDS TO BE INTEGRATED INTO TERMINAL BLOCK.

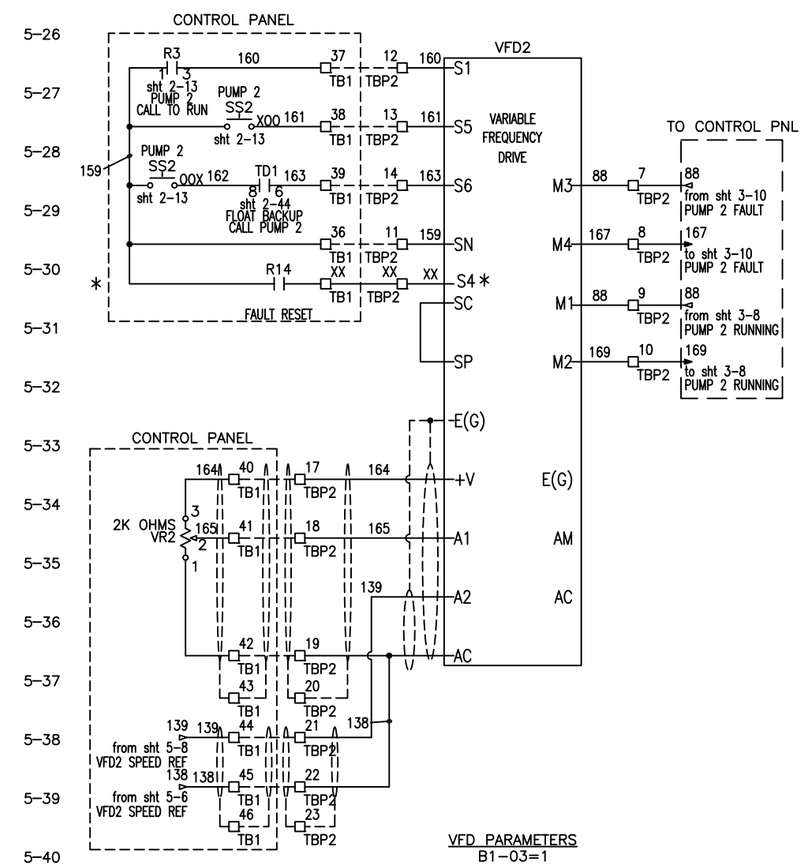

VFD PARAMETERS
B1-03=1
D1-01=60
D1-02=60
D1-03=60
H2-02=6
H3-02=2
H3-06=1F
H3-13=1
LS-01=3

REVISIONS	BY

IMPROVEMENTS TO WASTEWATER COLLECTION SYSTEM

LIFT STATION CONSTRUCTION DETAILS

ELECTRICAL STANDARDS

EMERALD COAST UTILITIES AUTHORITY

APPROVED BY:

Drawn:
Designed:
Checked:
Date: 12/18/2014
Scale:
Project No:
Sheet No. 5
Of 18 Sheets

ALL WORK SHALL BE CONSTRUCTED IN ACCORDANCE WITH THE LATEST EDITION OF THE E.C.U.A. STANDARD SPECIFICATIONS

TBPP

AJ	1	
AM	2	
2	3	
98	4	
113	5	
114	6	
98	7	
AA	8	
AB	9	
	10	
AC	11	
N;N	12	
	13	
AE	14	
N;N	15	
	16	
AR	17	
N	18	
	19	
AG;AG	20	
88	21	
90	22	
AS	23	
N	24	
	25	
AT	26	
N	27	
	28	

NOTE: THE TBCT FOR PM2 NEEDS TO INTEGRATED INTO THE POWER PANEL. CONFER WITH THE PROJECT ENGINEER.

POWER PANEL

NOTES:

TERMINAL BLOCK DESIGNATIONS:

- TBPP – POWER PANEL TERMINAL BLOCK
- TB1 – CONTROL PANEL TERMINAL BLOCK
- TB2 – INTRINSICALLY SAFE TERMINAL BLOCK
- TBP1 – PUMP 1 TERMINAL BLOCK
- TBP1A – PUMP 1 TERMINAL BLOCK (MOTOR THERMAL AND SEAL FAILURE)
- TBP2 – PUMP 2 TERMINAL BLOCK
- TBP2A – PUMP 2 TERMINAL BLOCK (MOTOR THERMAL AND SEAL FAILURE)

TB1

1;1	1		
	1		
	1		
	1		
	1		
2	2		
	2		
	2		
	2		
	2		
1;1	3		
68	4		
1;1	5		
73	6		
74A	7		
74	8		
75A	9		
75	10		
98;98	11		
113	12		
88;88	13		
151	14		
88;88	15		
169	16		
88;88	17		
149	18		
88;88	19		
167	20		
98;98	21		
98;98	22		
114;114	23		
114;114	24		
141	25		
142	26		
143	27		
145	28		
146	29		
147	30		
136	31		
	32		
137	33		
136	34		
	35		
159	36		
160	37		
161	38	FLOW METER (50P COMPACT) (4–20mA SIGNAL)	
163	39		
164	40	FLOW METER (50P COMPACT) (POWER)	
165	41		
138	42		
	43		
139	44		
138	45		
	46		
133	47	SUBMERSIBLE PRESSURE TRANSDUCER (FMX167)	
	48	HIGH LEL	
107	49		
105	50	HIGH HIGH LEL	
107	51		
108	52		
88;88	53		
90	54		
180	55		
181	56		
	F31		
2	57		
182	58		
183	59		
	F32		
2	60		
184	61		
185	62		
	F33		
2	63		
98	64		
	65		
	66	PRESSURE TRANSMITTER (PMP71) (4–20mA SIGNAL)	
	67		

CONTROL PANEL

TB2

76	1	sht 2–34 HIGH LEVEL FS2
77	2	
	G	
78	3	sht 2–34 OFF LEVEL FS1
79	4	
	G	

TBDC

	1	
AI	2	
	3	
AL	4	
86;86	5	
2;2	6	

TBP1

64	1	
65	2	
1	3	
68	4	
74A	5	
74	6	
88	7	
149	8	
88	9	
151	10	
141	11	
142	12	
143	13	
145	14	
98;98	15	
114;114	16	
146	17	
147	18	
136	19	
	20	
137	21	
136;136	22	
	23	
AC	24	
N	25	
	26	

TBP1A

64	1	TO #1 SEAL FAIL FLOAT SWITCH
74A	3	
65	2	sht 2–27 MTP1
74	4	

PUMP 1 PANEL

TBP2

69	1	
70	2	
1	3	
73	4	
75A	5	
75	6	
88	7	
167	8	
88	9	
169	10	
159	11	
160	12	
161	13	
163	14	
98	15	
114	16	
164	17	
165	18	
138	19	
	20	
139	21	
138;138	22	
	23	
AE	24	
N	25	
	26	

TBP2A

69	1	TO #2 SEAL FAIL FLOAT SWITCH
75A	3	
70	2	sht 2–29 MTP2
75	4	

PUMP 2 PANEL

TYPICAL FOR ALL TERMINAL BLOCKS ON THIS DRAWING

USE COPPER CONDUCTORS ONLY
75 DEG C (167 DEG F)
5.3–7.0 LB/IN TIGHTENING TORQUE

REVISIONS	BY

IMPROVEMENTS TO WASTEWATER COLLECTION SYSTEM

LIFT STATION CONSTRUCTION DETAILS

ELECTRICAL STANDARDS

EMERALD COAST UTILITIES AUTHORITY

APPROVED BY:

Drawn:	
Designed:	
Checked:	
Date:	12/18/2014
Scale:	
Project No:	
Sheet No.	6
	Of 18 Sheets

ALL WORK SHALL BE CONSTRUCTED IN ACCORDANCE WITH THE LATEST EDITION OF THE E.C.U.A. STANDARD SPECIFICATIONS

NOTES

1. SEE SHEET 15 FOR SCHEDULES, LEGENDS AND PANEL TAGS.
2. GENERATOR RECEPTACLE TO BE ON SAME SIDE AS THE DRIVEWAY.

ATTENTION

THIS LAYOUT IS ONE OF TWO (2) POSSIBLE CHOICES – SEE SHEET 7A FOR THE OTHER OPTION. IF THIS LAYOUT OPTION IS SELECTED, SEE SHEET 14 FOR ASSOCIATED RACK DETAILS.

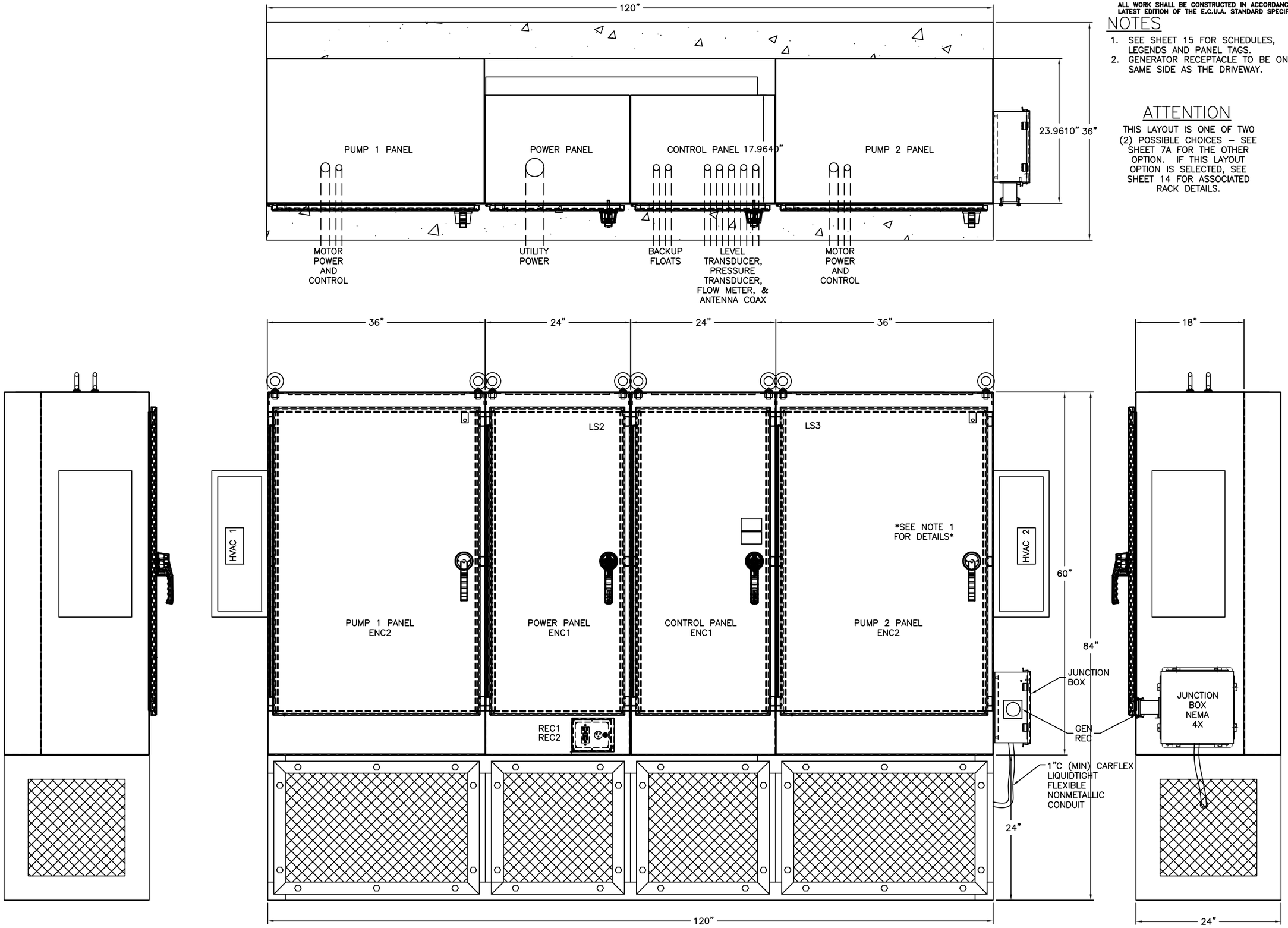

REVISIONS	BY

IMPROVEMENTS TO WASTEWATER COLLECTION SYSTEM

LIFT STATION CONSTRUCTION DETAILS

ELECTRICAL STANDARDS

EMERALD COAST UTILITIES AUTHORITY

APPROVED BY:

Drawn:
Designed:
Checked:
Date: 12/18/2014
Scale:
Project No:
Sheet No. 7
OF 18 Sheets

ALL WORK SHALL BE CONSTRUCTED IN ACCORDANCE WITH THE LATEST EDITION OF THE E.C.U.A. STANDARD SPECIFICATIONS

NOTES

1. SEE SHEET 15 FOR SCHEDULES, LEGENDS AND PANEL TAGS.
2. LAYOUT OF THE POWER & VFD SECTIONS DEPICTS THE LARGEST POSSIBLE HORSEPOWER CONFIGURATION.

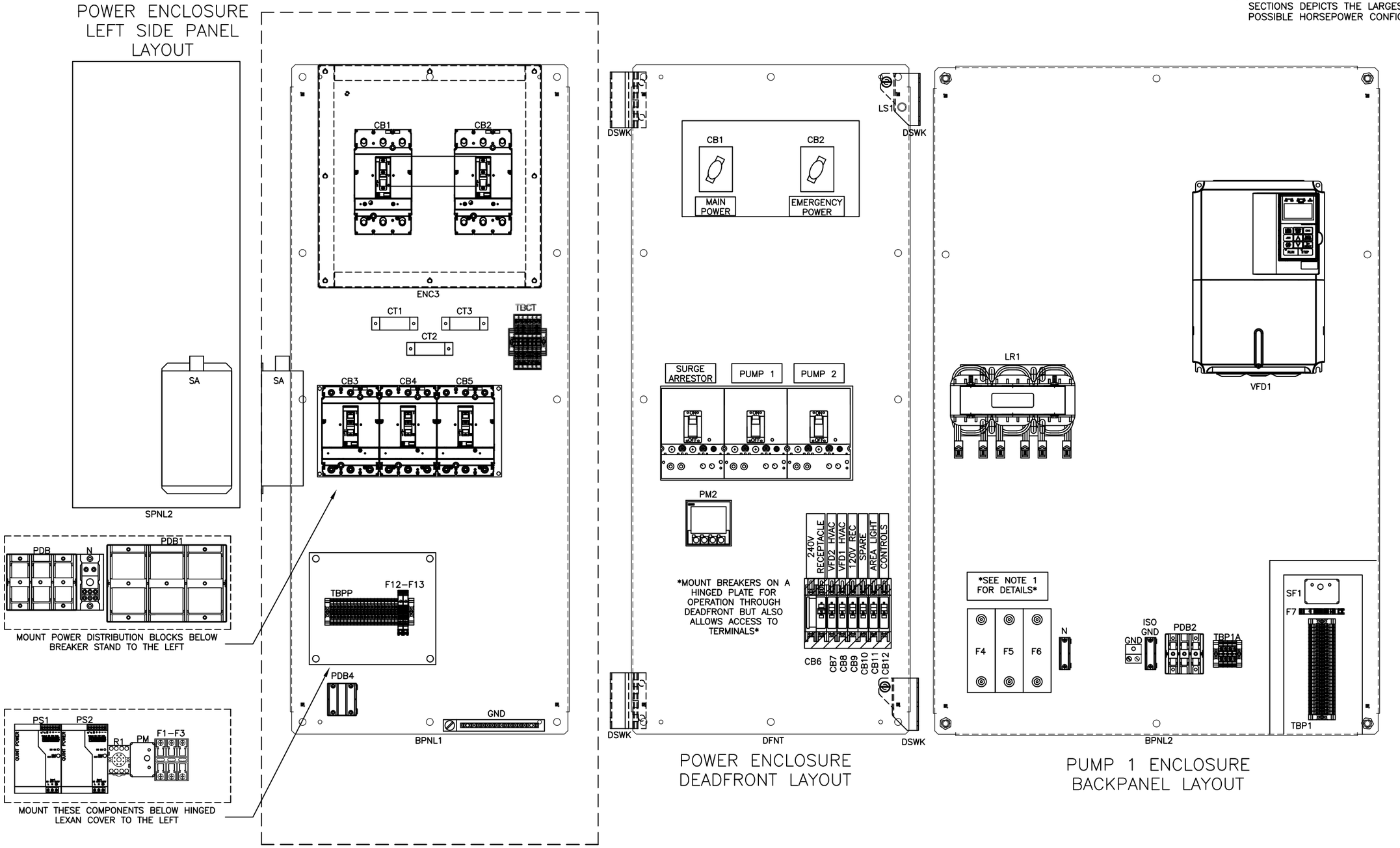

REVISIONS	BY

IMPROVEMENTS TO WASTEWATER COLLECTION SYSTEM

LIFT STATION CONSTRUCTION DETAILS

ELECTRICAL STANDARDS

EMERALD COAST UTILITIES AUTHORITY

APPROVED BY:

Drawn:	
Designed:	
Checked:	
Date:	12/18/2014
Scale:	
Project No:	
Sheet No.	8
	Of 18 Sheets

ALL WORK SHALL BE CONSTRUCTED IN ACCORDANCE WITH THE LATEST EDITION OF THE E.C.U.A. STANDARD SPECIFICATIONS

NOTES

1. SEE SHEET 15 FOR SCHEDULES, LEGENDS AND PANEL TAGS.
2. LAYOUT OF THE VFD SECTION DEPICTS THE LARGEST POSSIBLE HORSEPOWER CONFIGURATION.

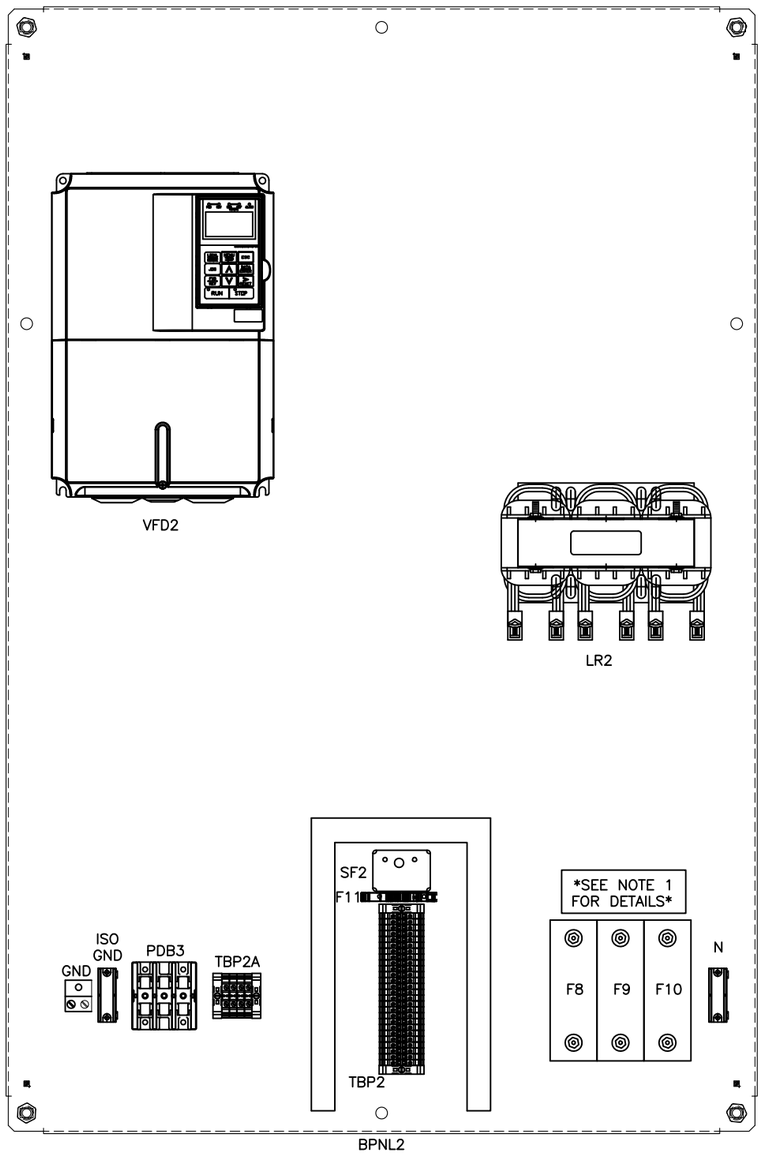

PUMP 2 ENCLOSURE BACKPANEL LAYOUT

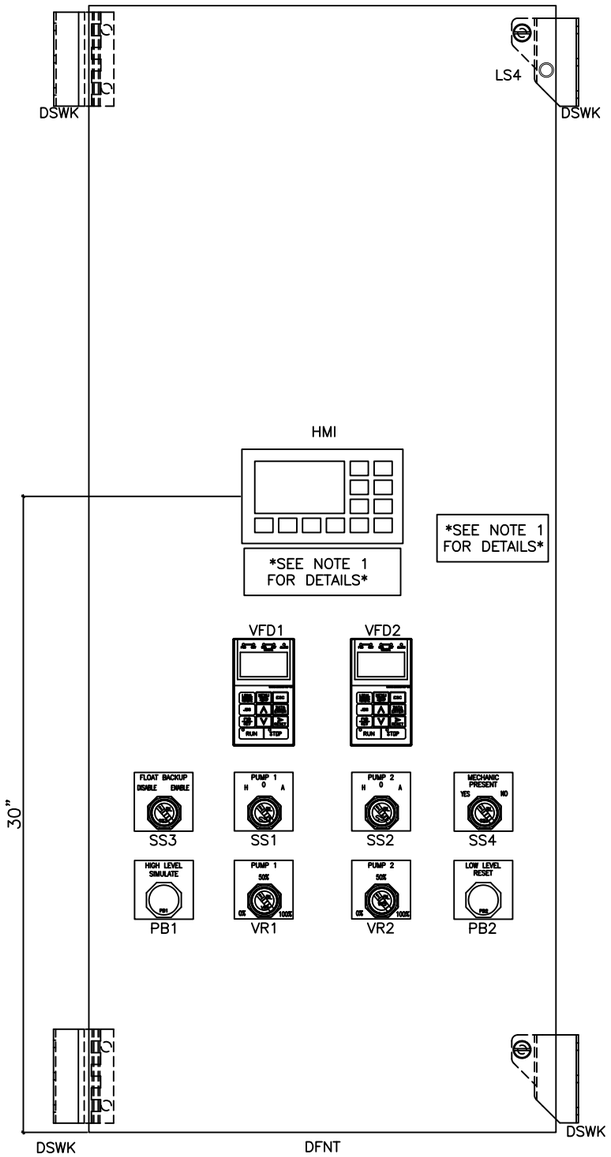

CONTROL PANEL DEADFRONT LAYOUT

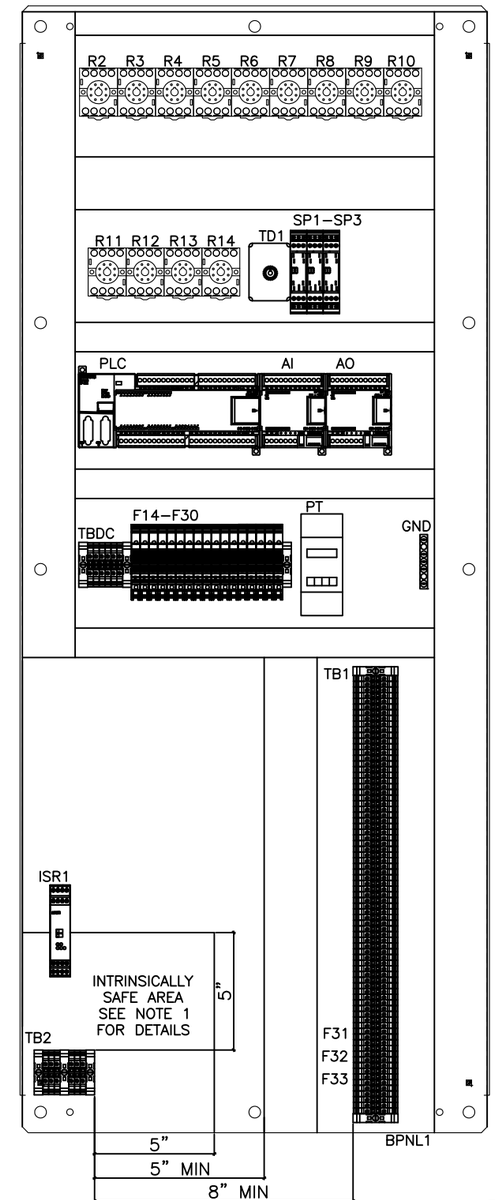

CONTROL ENCLOSURE BACKPANEL LAYOUT

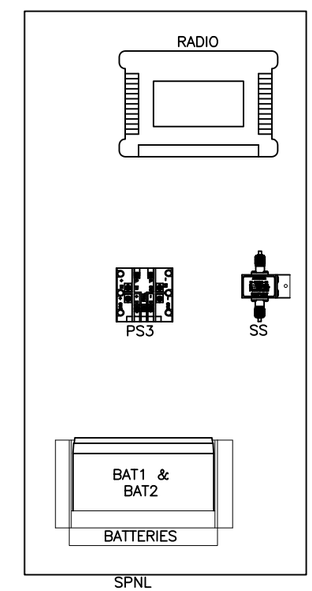

CONTROL ENCLOSURE RIGHT SIDEPANEL LAYOUT

REVISIONS	BY

IMPROVEMENTS TO WASTEWATER COLLECTION SYSTEM

LIFT STATION CONSTRUCTION DETAILS

ELECTRICAL STANDARDS

EMERALD COAST UTILITIES AUTHORITY

APPROVED BY:

Drawn:	
Designed:	
Checked:	
Date:	12/18/2014
Scale:	
Project No:	
Sheet No.	9
	Of 18 Sheets

ALL WORK SHALL BE CONSTRUCTED IN ACCORDANCE WITH THE LATEST EDITION OF THE E.C.U.A. STANDARD SPECIFICATIONS

240-208V VFD Equipment List

Item	Tag	Panel	Description	Manufacturer	Model	Qty	Item	Tag	Panel	Description	Manufacturer	Model	Qty
1	ENC1	Power & Control	60X24X18 NEMA 4X SS Enclosure	Hoffman	A602418SSFSN4	2	72	-	-	21' 1-1/4" S.S. Antenna Mast (Ship Loose)	Bell Steel	23008	1
2	BPNL1	Power & Control	60x24 Painted Steel Backpanel	Hoffman	A60P24F1	2	73	F20, F21	Control	1/4A Fuse, Motor Thermal Inputs	Bussmann	AGC-1/4	2
3	ENC2	Pump 1 & 2	60X36X24 NEMA 4X SS Enclosure	Hoffman	A603624SSFSN4	2	74	F18, F19, F25, F26	Control	2A Fuse, Radio Power Supply, Radio & Digital Outputs	Bussmann	AGC-2	4
4	BPNL2	Pump 1 & 2	60x36 Painted Steel Backpanel	Hoffman	A60P36F1	2	75	SS1, SS2	Control	3 Position Selector Switch, 30MM	Square D	9001SKS43BH2	2
5	SPNL	Control	28"H x 12"W Aluminum Sidepanel	EWS	Custom	1	76	R2-R13	Control	24VDC 3PDT General Purpose Relay w/ Indicator Lamp	Potter Brumfield	KRPA-14DN-24	12
6	DFNT	Power & Control	60x24 Aluminum Deadfront Panel	EWS	Custom	2	77	SF1, SF2	Control	120V Seal Failure Relay	ATC	SPM-120-AAA-10K	2
7	DSWK	Power & Control	Door Swing Kit	Hoffman	ANADFK	2	78	ISR1	Control	Intrinsically Safe Barrier Relay, 24VDC	Phoenix Contact	2865476	1
8	FRM	All	Expanded Metal Stainless Steel Frame 120x24x24	EWS	SEE DRAWINGS	1	79	TB2	Control	Terminal Block, Blue TB2	Phoenix Contact	3044115	4
9	PDB	Power	Incoming Power Distribution Block PDB	Square D	SEE HP TABLE SHEET 11	1	80	TB2	Control	Terminal Block, Blue End Barrier, TB2	Phoenix Contact	3047235	1
10	PDB	Power	Incoming Power Distribution Block PDB Cover	Square D	SEE HP TABLE SHEET 11	1	81	TB2	Control	Ground Terminal Blocks, TB2	Phoenix Contact	3044128	2
11	GND	Power	Power Panel Ground Bar	Square D	PK15GTA-L	1	82	PB1, PB2	Control	Push Button, Black 1NO 1NC	Square D	9001SKR1BH13	2
12	ENC3	Power	16"H x 16"W x 8"D Screw Cover Type 3R Enclosure	Hoffman	A16168GSC	1	83	SS3, SS4	Control	2 Position Selector Switch, 30MM	Square D	9001SKS11BH2	2
13	CB1	Power	600V Main Circuit Breaker	Square D	SEE HP TABLE	1	84	TD1	Control	24VDC 0-180 Second Time Delay Relay	Square D	RE48ATM12MW	1
14	CB2	Power	600V Emergency Circuit Breaker	Square D	SEE HP TABLE	1	85	TD1	Control	8 Pin Relay Base	ABB	NDS-8	1
15	CB1,CB2	Power	Mechanical Interlock for H/J Frame Circuit Breakers	Square D	S29369	1	86	F22, F29, F30	Control	1/10A Fuse, Analog Inputs, Analog Outputs & HMI	Bussmann	AGC-1/10	3
16	CB1,CB2	Power	Door Mounted Rotary Handle for H/J Frame Circuit Breakers	Square D	S29338	2	87	HMI	Control	TD400C Text Display	Siemens	6AV6 640-0AA00-0AX1	1
17	GEN REC	Power	NEMA 4X Generator Receptacle	Appleton	SEE HP TABLE SHEET 11	1	88	F23, F24	Control	1A Fuse, Digital Inputs	Bussmann	AGC-1	4
18	PDB1	Power	Main Power Distribution Block PDB1	Square D	SEE HP TABLE SHEET 11	1	89	PLC	Control	S7-200 Dual Com Port Processor w/ 24 DI & 16 DO Points	Siemens	6ES7 216-2AD23-0XB0	1
19	PDB1	Power	Main Power Distribution Block PDB1 Cover	Square D	SEE HP TABLE SHEET 11	1	90	AI	Control	S7-200 4 Point AI Module	Siemens	6ES7 231-0HC22-0XA0	1
20	F1-F3, F38-F40	Power	3 Pole Rejection type Fuse Block	Bussmann	BC6033PQ	2	91	AO	Control	S7-200 2 Point AO Moduel	Siemens	6ES7 232-0HB22-0XA0	1
21	F1-F3, F38-F40	Power	1A Rejection Type Fuse, Class CC	Bussmann	KTK-R-1	6	92	PLC	Control	S7-200 Communication cable PC/PPI RS-232/485	Siemens	6ES7 901-3CB30-0XA0	1
22	F1-F3, F38-F40	Power	Fuse Cover	Bussmann	SAMI-7N	6	93	SP1-SP3	Control	Plug In DI Surge Suppression, PT 4x1...DC	Phoenix Contact	2838322	3
23	PM	Power	240V Phase Monitor	Timemark	257B	1	94	SP1-SP3	Control	Terminal Block Base for Plugable Surge Supression, PT 4x1-BE	Phoenix Contact	2839363	3
24	PM	Power	600V, 8-Pin Relay Base	ABB	OT08PC	1	95	LS1-LS4	Control	Panel Intrusion Switches, N.C. Contacts	NSI	76030PS	4
25	CB3-CB5	Power	Breaker Stand	EWS	Custom	1	96	F27	Control	1-1/2A Fuse, PLC Supply	Bussmann	AGC-1-1/2	1
26	CB3	Power	30A 600V 3 Pole Circuit Breaker, Main Surge Arrestor	Square D	HDL36030	1	97	F28	Control	3/4A Fuse, Process Analyzer	Bussmann	AGC-3/4	1
27	SA	Power	Main Surge Arrestor	SSI	SEE HP TABLE SHEET 11	1	98	PT	Control	Process Transmitter	Endress & Hauser	RMA42AAAH2	2
28	CB4, CB5	Power	600V 3 Pole Circuit Breaker, VFD	Square D	SEE HP TABLE SHEET 11	2	99	PT	-	Submersible Level Transducer, 33ft Range w/ 60ft Cable & Mounting Clamp (Ship Loose)	Endress & Hauser	FMX21-FE221HGE21A	1
29	CB4, CB5	Power	H & J Frame Circuit Breaker Locking System	Square D	S29371	2	100	F31-F33	Control	24VDC Fused Terminal Block With Indication	Phoenix Contact	3046090	3
30	F4-F6, F8-F10	Pump 1 & 2	Semiconductor Fuse	Ferraz Shawmut	SEE HP TABLE SHEET 11	6	101	F31-F33	Control	1/4A Fuse, Analog Inputs	Bussmann	GMA-250	3
31	F4-F6, F8-F10	Pump 1 & 2	Semiconductor Fuse Block	Ferraz Shawmut	SEE HP TABLE SHEET 11	6	102	VR1, VR2	Control	2K Ohm Potentimeter	Square D	9001SK2139	2
32	LR1, LR2	Pump 1 & 2	5% Line Reactor	MTE	SEE HP TABLE SHEET 11	2	103	TBPP,1,DC,P1, 1A,P2 & 2A	All	Terminal Block, Gray 26-10 AWG Wire	Phoenix Contact	3044102	161
33	VFD1, VFD2	Pump 1 & 2	Variable Frequency Drive	Yaskawa	SEE HP TABLE SHEET 11	2	104	TBPP,1,DC,P1, 1A,P2 & 2A	All	Terminal Block End Barrier	Phoenix Contact	3047028	8
34	VFD1, VFD2	Control	Remote Operator Kit for Yaskawa P7 VFD	Yaskawa	UUX000444	2	105	TBPP,1,DC,P1, 1A,P2 & 2A	All	Terminal Block End Anchor	Phoenix Contact	800886	17
35	GND	Pump 1 & 2	Panel to Panel Ground Lug	NSI	2-0T	2	106	TBP1A, TBP2A	Pump 1 & 2	Terminal Block, Gray 26-8 AWG Wire, TBVFD1A & TBVFD2A	Phoenix Contact	3044131	8
36	PDB2, PDB3	Pump 1 & 2	Motor Power Distribution Block PDB2&3, (1)#14-2/0.....(1)#14-2/0	Square D	9080LBA362101	2	107	GND	Control	Control Panel Ground Bar	Square D	PK5GTA	1
37	PDB2, PDB3	Pump 1 & 2	Motor Power Distribution Block PDB2&3 Cover	Square D	9080LB23	2	108	VFD1, VFD2	Pump 1, 2 & Control	RJ45 Connector for non-sheilded CAT 6 Cable	Tessco	355847	4
38	CB6-CB11	Power	Hinged Aluminum Bracked for Mounting 240/120V Circuit Breakers through Deadfront	EWS	Custom	1	109	-	-	Meter Socket (SHIP LOOSE)	Milbank	SEE HP TABLE SHEET 11	1
39	PDB4	Power	240V/120V Power Distribution Block, (1) #14-2 ... (4) #18-10	Square D	9080LBA361104	1	110	-	-	Stainless Steel 60' Float (SHIP LOOSE)	Anchor Scientific	P60NO-SST	2
40	CB6	Power	20A, 240V, 2 Pole Circuit Breaker *Omit for 208V Supply Panels	Square D	QOU220	1	111	-	-	Insulated Ground Neutral (SHIP LOOSE)	Square D	SN400LA	1
41	REC1	Power	20A, 250V, 6-20R Receptacle *Omit for 208V Supply Panels	P&S	5872I	1	112	-	-	Ground Bar Kit (SHIP LOOSE)	Square D	PKDGTJ250	1
42	HVAC1, HVAC2	Pump 1 & 2	120V NEMA 4X Air Conditioner w/Heater	Iceqube	SEE HP TABLE SHEET 11	2	113	-	-	NEMA 4A S.S. Disconnect (SHIP LOOSE)	Square D	J250DS	1
43	CB10	Power	20A, 120V 1 Pole Circuit Breaker	Square D	QOU120	2	114	-	-	Antenna Mast Stabilization Plate (Ship Loose)	EWS	Custom	1
44	REC2	Power	120V 20A GFCI Duplex Receptacle NEMA5-20R	P&S	2094-I	1	115	-	-	Stainless Steel 'U' Bolt, 2" Pole, 5/16" Diameter Bolt w/ 2-1/2" Threads (SHIP LOOSE)			1
45	REC1, REC2	Power	Custom Receptacle Cover NEMA 4X S.S.	HOFFMAN	HIDRPSS-MOD	1	116	-	-	5/16" Stainless Steel Flat Washer for 'U' Bolt (SHIP LOOSE)			2
46	REC1, REC2	Power	3/4 1G AL FD BOX	Appelton	4CS-1/2	2	117	-	-	5/16" Stainless Steel Lock Washer for 'U' Bolt (SHIP LOOSE)			2
47	CB7, CB8, CB12	Power	10A, 120V, 1 Pole Circuit Breaker	Square D	QOU110	3	118	-	-	5/16" Stainless Steel Nut for 'U' Bolt (SHIP LOOSE)			2
48	CB11	Power	15A, 120V, 1 Pole Circuit Breaker	Square D	QOU115	1	119	-	-	Stainless Steel 'U' Bolt, 1/4" Diameter (SHIP LOOSE)			2
49	R1	Power	120V 3PDT General Purpose Relay w/ Indicator Lamp	Potter Brumfield	KRPA-14AN-120	1	120	-	-	1/4" Stainless Steel 1/4" Nut for 'U' Bolt (SHIP LOOSE)			4
50	R1-R13, SF1, SF2	All	11 Pin Relay Base	ABB	NDS-11	15	121	-	-	1-1/4" Reduction Bushing for Antenna Tower, ROHN R-TB50 (SHIP LOOSE)	Tessco	36882	1
51	F7, F11-F13	Pump 1, 2 & Power	Fused Terminal Block w/ 120V Blown Fuse Indication	Allen Bradley	1492-H4	4	122	PLC	Control	S7-200 Memory Module	Siemens	6ES7 2918GF230AX0	1
52	-	Power & Control	1492-H4 &H5 Fused Terminal Block End Cover	Allen Bradley	1492-N37	4	123	ISO GND	Pump 1 & 2	Motor Isolated Ground Lug	Square D	9080LBA161101	2
53	F12, F13	Power	3A Fuse, Power Supply Primary	Bussmann	AGC-3	2	124	N	Pump 1 & 2	Neutral Block	Square D	9080LBA161104	2
54	PS1, PS2	Power	10A 24VDC Power Supply	Phoenix Contact	2938604	2	125	SPNL2	Power	32"X12" Aluminum Sidepanel	EWS	Custom	1
55	D1, D2	Power	10A Diode, P1000A	Newark	51R7094	2	126	FM	Control	Flow Meter	Endress & Hauser	50P Compact	1
56	-	Power	Custom Stand/Lexan Hinged Cover w/Alum Stand for TBPP & Power Supply Fuses	EWS	Custom	1	127	PR	Control	Pressure Transmitter (1-150 PSI Transmitter)	Endress & Hauser	PMP71-AAC1PG1RAAMA	1
57	F14-F30	Control	Fused Terminal Block w/ 24VDC Blown Fuse Indication	Allen Bradley	1492-H5	17	128	PM2	Power	Voltage Monitor, Siemens Sentron PAC3100	Siemens	7KM3133-0BA00-3AA0	1
58	F14 - F17	Control	10A Fuse, Power Supply Secondary & Batteries	Bussmann	AGC-10	4	129	TBCT	Power	Terminal Block, DIN Rail, Test Disconnect	Phoenix Contact	3047400	6
59	BAT1, BAT2	Control	12VDC Battery	Power Sonic	PS1290	2	130	TBCT	Power	Terminal Block, C-ME 6/2	Phoenix Contact	3034442	3
60	PS3	Control	24VDC-15VDC Converter, 2A	Vicor	V1-J12-EY-B1	1	131	TBCT	Power	Switching Jumper POS 2, Gray/Orange	Phoenix Contact	3034468	3
61	N	Power	Incoming Neutral Block	Square D	9080LBA163206	1	132	TBCT	Power	Cover, 2.2M	Phoenix Contact	3047426	1
62	N	Power	Incoming Neutral Block, Cover	Square D	9080LB31	1	133	CT1-CT3	Power	Current Transformer, 200:5 Ratio	Square D	2NR201	3
63	RADIO	Control	400MHz Radio	GE MDS	SD04MD	1	134	F41	Power	1 Pole Rejection Type Fuse Block	Bussmann	BC6031PQ	1
64	RADIO	Control	DB9 Male/Male Gender Changer	Office Depot	946660	1	135	F41	Power	0.6A Rejection Type Fuse, Class CC	Bussmann	KTK-R-6/10	1
65	RADIO/SS	Control	3 Foot LMR400UF Coaxial Jumper NMale to TNCMale	Tessco	324503	1	136	ENC4	Power	14"x12" NEMA 4X SS Enclosure	HOFFMAN	LCS353020SS	1
66	SS	Control	Coaxial Surge Suppressor, 100-512MHz	Polyphaser	VHF50HN	1	137	ENC4	Power	2" Galvanized Rigid Coupling	HOFFMAN	LCS353020SS	1
67	-	-	50FT Coaxial Cable, NMale-Nmale, Wireless Solutions 400-07-07-P50 (Ship Loose)	Tessco	370875	1	138	ENC4	Power	2" x 1 1/2" Reducing Bushing	Crouse Hinds	LCS353020SS	1
68	-	-	400MHz Yagi Antenna w/ N Female Connector, MAXRAD MYA4506N (Ship Loose)	Tessci	37634	1	139	ENC4	Power	2" Ring Seal Rubber Gasket	T & B	5267	1
69	-	-	Antenna Tower 5' Base Section, ROHN R-SB25G5 (Ship Loose)	Tessco	64559	1	140	ENC4	Power	Cord Grip (GB 1.28 - 1.53)	Appleton	CG-128150	1
70	-	-	Antenna Tower 10' Mid Section, ROHN R-25G (Ship Loose)	Tessco	56866	1	141	ENC4	Power	1 1/2" Aluminum Hub	Crouse Hinds	STA-5	1
71	-	-	Antenna Tower 9' Top Section, ROHN R-25AG2 (Ship Loose)	Tessco	70080	1							

REVISIONS	BY

IMPROVEMENTS TO WASTEWATER COLLECTION SYSTEM

LIFT STATION CONSTRUCTION DETAILS

ELECTRICAL STANDARDS

EMERALD COAST UTILITIES AUTHORITY

APPROVED BY:

Drawn:
Designed:
Checked:
Date: 12/18/2014
Scale:
Project No:
Sheet No. 10
Of 18 Sheets

ALL WORK SHALL BE CONSTRUCTED IN ACCORDANCE WITH THE LATEST EDITION OF THE E.C.U.A. STANDARD SPECIFICATIONS

Horsepower Related Compontents Equipment List									
Item	Tag	Horsepower							
		1	2	3	5	7.5	10	15	20
Incoming Power Distribution Block	PDB	9080LBA362101	9080LBA362101	9080LBA362101	9080LBA362101	9080LBA362101	9080LBA363101	9080LBA363101	9080LBA363101
Incoming Power Distribution Block Cover	PDB	9080LB23	9080LB23	9080LB23	9080LB23	9080LB23	9080LB33	9080LB33	9080LB33
Main Circuit Breaker	CB1	HDL36070	HDL36070	HDL36080	HDL36100	HDL36125	HDL36175	HDL36200	JDL36225
Emergency Circuit Breaker	CB2	HDL36070	HDL36070	HDL36080	HDL36100	HDL36125	HDL36175	HDL36200	JDL36200
Generator Receptacle	GEN REC	ADR1044-RS	ADR1044-RS	ADR1044-RS	ADR1044-RS	AR20044RS	AR20044RS	AR20044RS	AR20044RS
Generator Plug (Ship Loose)	GEN REC	ACP1044CD-RS	ACP1044CD-RS	ACP1044CD-RS	ACP1044CD-RS	AP20044E-RS	AP20044E-RS	AP20044E-RS	AP20044E-RS
Main Power Distribution Block	PDB1	9080LBA363206	9080LBA363206	9080LBA363206	9080LBA363206	9080LBA363206	9080LBA365208	9080LBA365208	9080LBA365208
Main Power Distribution Block Cover	PDB1	9080LB33	9080LB33	9080LB33	9080LB33	9080LB33	9080LB53	9080LB53	9080LB53
Surge Arrestor 208V	SA	SDLA3Y1	SDLA3Y1	SDLA3Y1	SDLA3Y1	SDLA3Y1	SDLA3Y1	SDLA3Y1	SDLA3Y1
Surge Arrestor 240V	SA	SDLA3D1	SDLA3D1	SDLA3D1	SDLA3D1	SDLA3D1	SDLA3D1	SDLA3D1	SDLA3D1
VFD Circuit Breaker	CB4, CB5	HDL36015	HDL36015	HDL36020	HDL36035	HDL36045	HDL36080	HDL36100	HDL36125
VFD Semiconductor Fuse	F4-F6, F10-F12	A70P10-1	A70P15-1	A70P20-1	A70P30-1	A70P50-4	A70P80-4	A70P80-4	A70P125-4
VFD Semiconductor Fuse Block	F4-F6, F10-F12	70316	70316	70316	70316	P243C	P243C	P243C	P266A
5% Line Reactor 208V	LR1, LR2	RL-00802	RL-01202	RL-01802	RL-02502	RL-03502	RL-05502	RL-08002	RL-10002
5% Line Reactor 240V	LR1, LR2	RL-00803	RL-00802	RL-01202	RL-01802	RL-03502	RL-03502	RL-05502	RL-08002
Variable Frequency Drive	VFD1, VFD2	CIMR-PU2A0006	CIMR-PU2A0008	CIMR-PU2A0012	CIMR-PU2A0018	CIMR-PU2A0021	CIMR-PU2A0030	CIMR-PU2A0040	CIMR-PU2A0056
Side Mount AC *Back-to-Back Layout Only*	HVAC1, HVAC2	IQ2000VS-136	IQ2000VS-136	IQ2000VS-136	IQ2000VS-136	IQ2000VS-136	IQ2000VS-136	IQ3000VS-136	IQ2000VS-136IH & IQ3000VS-136IH
Meter Socket	-	UAP9701-RRL	UAP9701-RRL	UAP9701-RRL	UAP9701-RRL	UAP9701-RRL	UAP9701-RRL	UAP3566-X-HSP	UAP3566-X-HSP

Horsepower Related Power Conductors, CGB's and Hubs									
Conductor Tag		Horsepower							
		1	2	3	5	7.5	10	15	20
P-01, P-03 & P-04	Description	(3)#4	(3)#4	(3)#4	(3)#3	(3)#1	(3)#2/0	(3)#3/0	(3)#4/0
	Manufacturer	N/A	N/A	N/A	N/A	N/A	N/A	N/A	N/A
	Catalog #	N/A	N/A	N/A	N/A	N/A	N/A	N/A	N/A
	Length (Max Ft)	N/A	N/A	N/A	N/A	N/A	N/A	N/A	N/A
	Cable Dia (in)	0.324"	0.324"	0.324"	0.352"	0.446"	0.532"	0.584"	0.642"
	Appleton Connector	(3) -CG-3150	(3) -CG-3150	(3) -CG-3150	(3) -CG-3150	(3)-CG-3775	(3) -CG-5075	(3) -CG-5075	(3) -CG-6275
	Connector Range	0.312"-0.437"	0.312"-0.437"	0.312"-0.437"	0.312"-0.437"	0.375"-0.500"	0.500"-0.625"	0.500"-0.625"	0.625"-0.750"
	Meyers Hub	(3) 1/2" - STA-1	(3) 1/2" - STA-1	(3) 1/2" - STA-1	(3) 1/2" - STA-1	(3) 3/4" - STA-2	(3) 3/4" - STA-2	(3) 3/4" - STA-2	(3) 3/4" - STA-2
P-02A	Description	(1)#8	(1)#8	(1)#8	(1)#8	(1)#6	(1)#6	(1)#6	(1)#4
	Manufacturer	N/A	N/A	N/A	N/A	N/A	N/A	N/A	N/A
	Catalog #	N/A	N/A	N/A	N/A	N/A	N/A	N/A	N/A
	Length (Max Ft)	N/A	N/A	N/A	N/A	N/A	N/A	N/A	N/A
	Cable Dia (in)	0.216"	0.216"	0.216"	0.216"	0.254"	0.254"	0.254"	0.324"
	Appleton Connector	(1)-GC-1850	(1)-GC-1850	(1)-GC-1850	(1)-GC-1850	(1)-GC-1850	(1)-GC-1850	(1)-GC-1850	(1)-GC-3150
	Connector Range	0.187"-0.312"	0.187"-0.312"	0.187"-0.312"	0.187"-0.312"	0.187"-0.312"	0.187"-0.312"	0.187"-0.312"	0.312"-0.437"
	Hub	(1) 1/2" - STA-1	(1) 1/2" - STA-1	(1) 1/2" - STA-1	(1) 1/2" - STA-1	(1) 1/2" - STA-1	(1) 1/2" - STA-1	(1) 1/2" - STA-1	(1) 1/2" - STA-1
P-02B	Description	(1)#8	(1)#8	(1)#8	(1)#8	(1)#6	(1)#6	(1)#6	(1)#4
	Manufacturer	Southwire	Southwire	Southwire	Southwire	Southwire	Southwire	Southwire	Southwire
P-05 & P-06	Description	(3)#4	(3)#4	(3)#4	(3)#3	(3)#1	(3)#2/0	(3)#3/0	(3)#3/0
	Manufacturer	N/A	N/A	N/A	N/A	N/A	N/A	N/A	N/A
	Catalog #	N/A	N/A	N/A	N/A	N/A	N/A	N/A	N/A
	Length (Max Ft)	N/A	N/A	N/A	N/A	N/A	N/A	N/A	N/A
	Cable Dia (in)	0.324"	0.324"	0.324"	0.352"	0.446"	0.532"	0.584"	0.584"
	Appleton Connector	(3) -CG-3150	(3) -CG-3150	(3) -CG-3150	(3) -CG-3150	(3)-CG-3775	(3) -CG-5075	(3) -CG-5075	(3) -CG-5075
	Connector Range	0.312"-0.437"	0.312"-0.437"	0.312"-0.437"	0.312"-0.437"	0.375"-0.500"	0.500"-0.625"	0.500"-0.625"	0.500"-0.625"
	Hub	(3) 1/2" - STA-1	(3) 1/2" - STA-1	(3) 1/2" - STA-1	(3) 1/2" - STA-1	(3) 3/4" - STA-2	(3) 3/4" - STA-2	(3) 3/4" - STA-2	(3) 3/4" - STA-2
P-07 & P-10	Description	(3)#14 W/G, TC	(3)#14 W/G, TC	(3)#12 W/G, TC	(3)#10 W/G, TC	(3)#10 W/G, TC	(3)#8 W/G, TC	(3)#6 W/G, TC	(3)#4 W/G, TC
	Manufacturer	Houston Wire	Houston Wire	Houston Wire	Houston Wire	Houston Wire	Houston Wire	Houston Wire	Houston Wire
	Catalog #	HW151 1405	HW151 1405	HW151 1205	HW151 1005	HW151 1005	HW 154 00804	HW 154 00604	HW 154 00404
	Length (Max Ft)	19 FT	19 FT	19 FT	19 FT	19 FT	19 FT	19 FT	19 FT
	Cable Dia (in)	0.41"	0.41"	0.46"	0.58"	0.58"	0.61"	0.76"	0.97"
	Appleton Connector	(2) -CG-3150	(2) -CG-3150	(2) -CG-3750	(2) -CG-5050	(2) -CG-5050	(2) - CG-5075	(2) - CG-7575	(2) - CG-87100
	Connector Range	0.312"-0.437"	0.312"-0.437"	0.375"-0.500"	0.500"-0.625"	0.500"-0.625"	0.500"-0.625"	0.750"-0.875"	0.875"-1.000"
	Hub	(2) 1/2" - STA-1	(2) 1/2" - STA-1	(2) 1/2" - STA-1	(2) 1/2" - STA-1	(2) 1/2" - STA-1	(2) 3/4" - STA-2	(2) 3/4" - STA-2	(2) 1" - STA-3
P-08 & P-11	Description	(3)#14	(3)#14	(3)#12	(3)#10	(3)#10	(3)#8	(3)#6	(3)#4
	Manufacturer	Southwire	Southwire	Southwire	Southwire	Southwire	Southwire	Southwire	Southwire
P-09A & B, P-12A & B	Description	(1)#14	(1)#14	(1)#12	(1)#10	(1)#10	(1)#8	(1)#6	(1)#6
	Manufacturer	Southwire	Southwire	Southwire	Southwire	Southwire	Southwire	Southwire	Southwire

REVISIONS	BY

IMPROVEMENTS TO WASTEWATER COLLECTION SYSTEM

LIFT STATION CONSTRUCTION DETAILS

ELECTRICAL STANDARDS

EMERALD COAST UTILITIES AUTHORITY

APPROVED BY:

Drawn:
Designed:
Checked:
Date: 12/18/2014
Scale:
Project No:
Sheet No. 11
Of 18 Sheets

ALL WORK SHALL BE CONSTRUCTED IN ACCORDANCE WITH THE LATEST EDITION OF THE E.C.U.A. STANDARD SPECIFICATIONS

Power & Control Conductors, CGB's and Hubs

Cable Number	Description	Manufacturer	Catalog Numer	Length (Max Ft)	Cable Diameter	Appleton Liquidtight Cable Connector	Connector Cable Range	Crouse-Hinds Myers Hub	From Panel/Enclosure	To Panel/Enclosure
P-14	(1)#8 AWG	N/A	N/A	AS REQ'D	N/A	N/A	N/A	N/A	Field	Power Panel
P-15	3-1/C #12 AWG	N/A	N/A	AS REQ'D	N/A	N/A	N/A	N/A	Power Panel	Power Panel
P-16	3-1/C #12 AWG	N/A	N/A	AS REQ'D	N/A	N/A	N/A	N/A	Power Panel	Power Panel
C-01	(16) #14 AWG, Tray Cable	Houston Wire & Cable	HW 151 01416	24 FT	0.68"	(2) - CG-6275	0.625"-0.750"	(2) 3/4" - STA-2	Power Panel	Control Panel
C-02	(5) #14 AWG, Tray Cable	Houston Wire & Cable	HW 151 01405	19 FT	0.41"	(2) - CG-3750	0.375"-0.500"	(2) 1/2" - STA-1	Power Panel	Pump 1 Panel
C-03	(16) #14 AWG, Tray Cable	Houston Wire & Cable	HW 151 01416	22 FT	0.68"	(2) - CG-6275	0.625"-0.750"	(2) 3/4" - STA-2	Pump 1 Panel	Control Panel
C-04	(16) #14 AWG, Tray Cable	Houston Wire & Cable	HW 151 01416	19 FT	0.68"	(2) - CG-6275	0.625"-0.750"	(2) 3/4" - STA-2	Control Panel	Pump 2 Panel
C-05	1 Triad #16 SH, Tray Cable	Houston Wire & Cable	HW 121 1601T	22 FT	0.35"	(2) - CG-3150	0.312"-0.437"	(2) 1/2" - STA-1	Pump 1 Panel	Control Panel
C-06	1 Pair #16 SH, Tray Cable	Houston Wire & Cable	HW 120 01601	22 FT	0.33"	(2) - CG-2575	0.250"-0.375"	(2) 3/4" - STA-2	Pump 1 Panel	Control Panel
C-07	1 Triad #16 SH, Tray Cable	Houston Wire & Cable	HW 121 1601T	19 FT	0.35"	(2) - CG-3150	0.312"-0.437"	(2) 1/2" - STA-1	Pump 2 Panel	Control Panel
C-08	1 Pair #16 SH, Tray Cable	Houston Wire & Cable	HW 120 01601	19 FT	0.33"	(2) - CG-2575	0.250"-0.375"	(2) 3/4" - STA-2	Pump 2 Panel	Control Panel
C-09	(5) #14 AWG, Tray Cable	Houston Wire & Cable	HW 151 01405	22 FT	0.41"	(2) - CG-3750	0.375"-0.500"	(2) 1/2" - STA-1	Power Panel	Pump 2 Panel
PUMP 1-PWR	Per Mfg Specs	N/A	N/A	N/A	N/A	CG Series based on Mfg Specs	N/A	STA Series based on Mfg Specs	Field (Pump 1)	Pump 1 Panel
PUMP 1-MTP	Per Mfg Specs	N/A	N/A	N/A	N/A	CG Series based on Mfg Specs	N/A	STA Series based on Mfg Specs	Field (Pump 1)	Pump 1 Panel
PUMP 1-SF	Per Mfg Specs	N/A	N/A	N/A	N/A	CG Series based on Mfg Specs	N/A	STA Series based on Mfg Specs	Field (Pump 1)	Pump 1 Panel
PUMP 2-PWR	Per Mfg Specs	N/A	N/A	N/A	N/A	CG Series based on Mfg Specs	N/A	STA Series based on Mfg Specs	Field (Pump 2)	Pump 2 Panel
PUMP 2-MTP	Per Mfg Specs	N/A	N/A	N/A	N/A	CG Series based on Mfg Specs	N/A	STA Series based on Mfg Specs	Field (Pump 2)	Pump 2 Panel
PUMP 2-SF	Per Mfg Specs	N/A	N/A	N/A	N/A	CG Series based on Mfg Specs	N/A	STA Series based on Mfg Specs	Field (Pump 2)	Pump 2 Panel
Float Switch 1	Float Switch Cable	BY OTHERS	N/A	N/A	0.56"	(1) - CG-5050	0.500"-0.625"	(1) 1/2" - STA-1	Field (Float Switch)	Control Panel
Float Switch 2	Float Switch Cable	BY OTHERS	N/A	N/A	0.56"	(1) - CG-5050	0.500"-0.625"	(1) 1/2" - STA-1	Field (Float Switch)	Control Panel
Pressure Xducer	Pressure Transducer Cable	BY OTHERS	N/A	N/A	0.35"	(1) - G-3150	0.312"-0.437"	(1) 1/2" - STA-1	Field (Float Switch)	Control Panel
Antenna COAX	Coaxial Cable	BY OTHERS	N/A	N/A	0.408"	(1) - CG-3750	0.375"-0.500"	(1) 1/2" - STA-1	Field (Antenna)	Control Panel
CAT5-1	Ethernet	BELDEN	7922A	19 FT	0.301"	(2) - CG-1850	0.187"-0.312"	(2) 1/2" - STA-1	Pump 1 Panel	Control Panel
CAT5-2	Ethernet	BELDEN	7922A	22 FT	0.301"	(2) - CG-1850	0.187"-0.312"	(2) 1/2" - STA-1	Pump 2 Panel	Control Panel

SERVICING CT & TESTING AMMETERS INSTRUCTIONS

WARNING

NEVER LEAVE THE CT CIRCUIT OPEN ALWAYS SHORT THE CIRCUIT. WHEN MAINTENANCE IS REQUIRED ENSURE TO FOLLOW THE INSTRUCTIONS BELOW. FAILURE TO DO SO MAY RESULT IN HIGH VOLTAGE SURGE THAT COULD INJURE PERSONAL AND DAMAGE EQUIPMENT.

THE CALIBRATION & DISCONNECT PROCESS

1. Loosen the screws on the SB-ME 2-8 and move the shorting bar from position A to B to short the outputs of the CT.
2. Secure the shorting bar by tightening the screws. The CT is now neutralized and the circuit is "safe" to open.
   - 2.1. For circuits that include an ME knife-disconnect terminal block, the knife disconnects can now be safely opened.
3. The test signal can now be injected into the transducer/meter side of the circuit by inserting the signal probes into the test adapters or connecting the signal to the disconnected wiring of the measurement circuit.

To return the unit to normal operation, perform the above steps in reverse order:

1. Disconnect the test signal/probes from the transducer wires or remove probes from the test plugs.
   - 1.1. For circuits that include the ME, the knife disconnect must now be CLOSED.
2. Open the switching bridge and return to normal operation.
3. Loosen the screws and move the shorting bar from position B to A and snap into place.
4. Tighten the screws to prevent movement and inadvertent shorting of the CT.

The CT measurement circuit is now functional

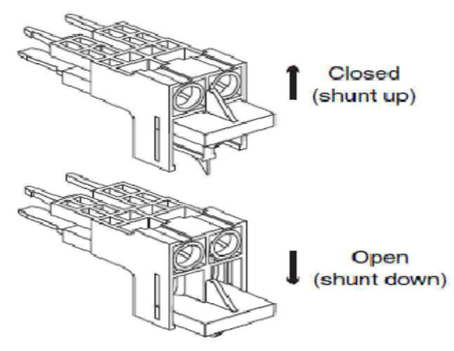

FIGURE 1: SB-ME 2-8 switching bridge

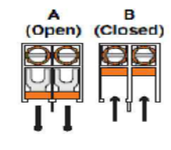

FIGURE 2: SB-ME 2-8 switching bridge

REVISIONS	BY

IMPROVEMENTS TO WASTEWATER COLLECTION SYSTEM

LIFT STATION CONSTRUCTION DETAILS

ELECTRICAL STANDARDS

EMERALD COAST UTILITIES AUTHORITY

APPROVED BY:

Drawn:
Designed:
Checked:
Date: 12/18/2014
Scale:
Project No:
Sheet No. 12
Of 18 Sheets

NOTES:

ALL WORK SHALL BE CONSTRUCTED IN ACCORDANCE WITH THE LATEST EDITION OF THE E.C.U.A. STANDARD SPECIFICATIONS

1) ALL SPARE WIRE WILL BE CLEARLY LABELED WITH THE CABLE NUMBER & A SPARE DESIGNATION ON INDIVIDUAL WIRES (S1, S2, ect...). THESE SPARES SHOULD BE ABLE TO REACH ALL TERMINAL BLOCKS IN THE PANEL.

2) SPARE CONDUCTORS SHOULD BE TRIMMED AND HEAT SHRINK SHOULD BE USED TO SECURE THE SPARE CONDUCTORS IN THE CABLE.

3) THE INNER CONNECTING CONDUCTORS BETWEEN THE PANELS ARE CODED AS FOLLOWS: THE FIRST GROUP OF CHARACTER IS THE WIRE NUMBER AND THE SECOND GROUP IS THE COLOR (I.E. 1(BK) SIGNIFIES THAT THE WIRE NUMBER IS 1 AND THE COLOR IS BLACK). WIRE COLOR CODE AS FOLLOWS: BK-BLACK, RD-RED, BU-BLUE, OR-ORANGE, YL-YELLOW, BN-BROWN. FOR COLORS THAT ARE DENOTED AS XX/YY, XX IS THE BASE COLOR AND YY IS THE SPIRAL STRIPE (1.E. RD/BK IS A RED WIRE WITH A BLACK SPIRAL STRIPE).

4) SEE SHEETS 11 AND 12 FOR PANEL TO PANEL INNER CONNECTING CONDUCTOR AND CABLE DETAILS.

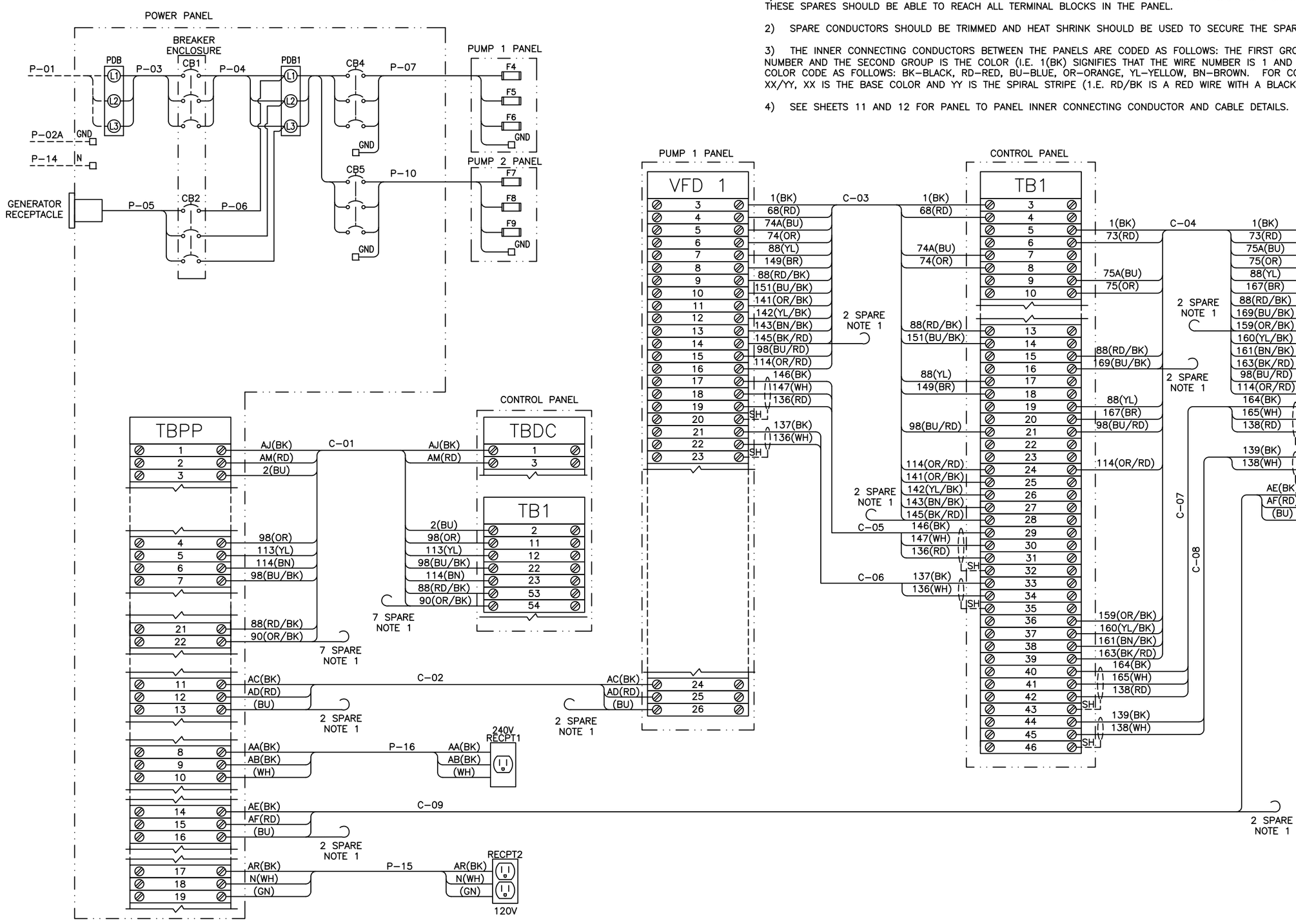

REVISIONS	BY

IMPROVEMENTS TO WASTEWATER COLLECTION SYSTEM

LIFT STATION CONSTRUCTION DETAILS

ELECTRICAL STANDARDS

EMERALD COAST UTILITIES AUTHORITY

APPROVED BY:

Drawn:	
Designed:	
Checked:	
Date:	12/18/2014
Scale:	
Project No:	
Sheet No.	13
	Of 18 Sheets

ALL WORK SHALL BE CONSTRUCTED IN ACCORDANCE WITH THE LATEST EDITION OF THE E.C.U.A. STANDARD SPECIFICATIONS

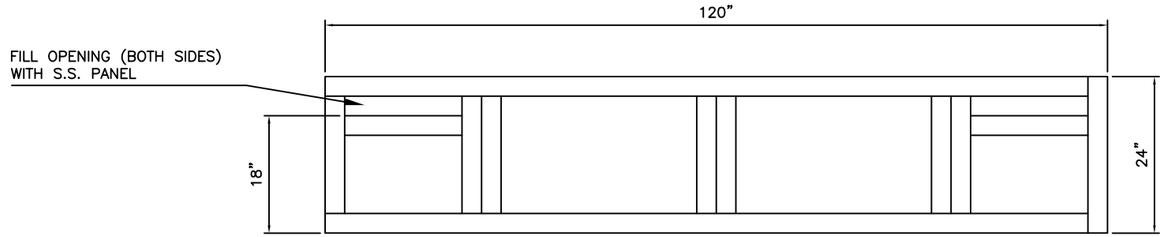

TOP VIEW

NOTES:

1. TOP AND BOTTOM OF BASE TO BE LEFT OPEN.
2. DRILL TOP OF BASE TO ATTACH ENCLOSURES AS REQUIRED.
3. DRILL BOTTOM OF BASE TO ATTACH TO SLAB AS REQUIRED.

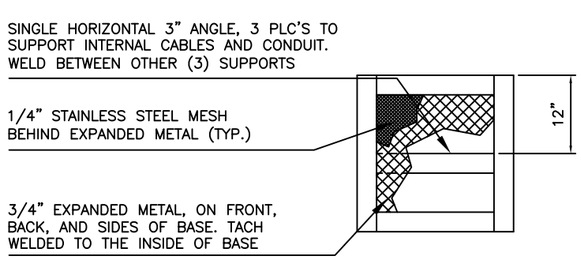

END VIEW

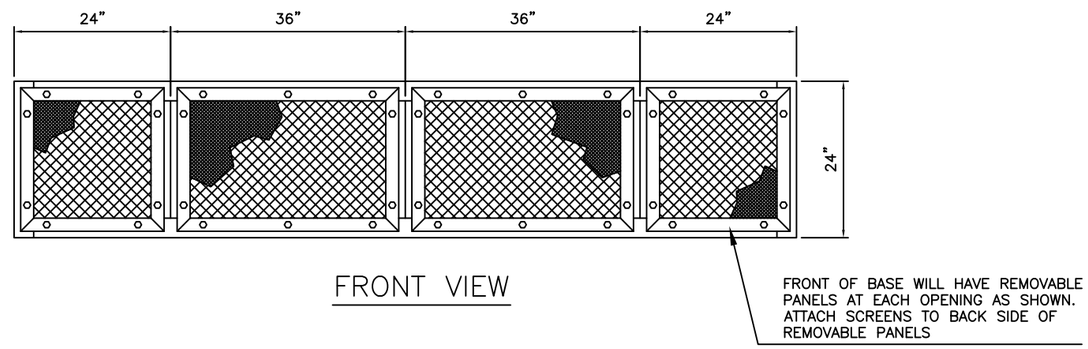

FRONT VIEW

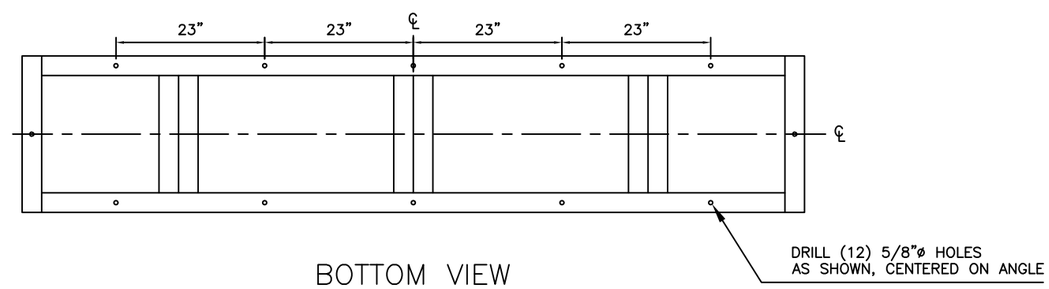

BOTTOM VIEW

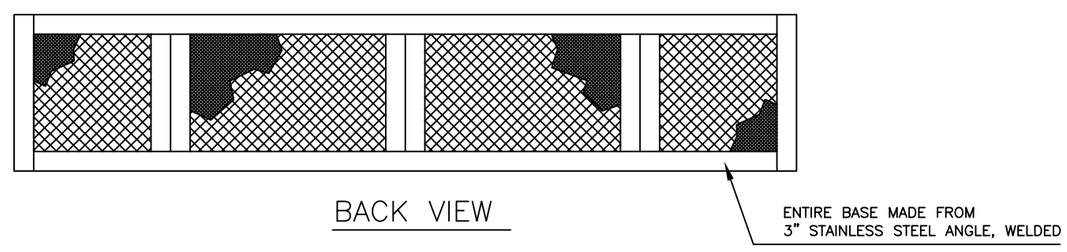

BACK VIEW

REVISIONS	BY

IMPROVEMENTS TO WASTEWATER COLLECTION SYSTEM

LIFT STATION CONSTRUCTION DETAILS

ELECTRICAL STANDARDS

EMERALD COAST UTILITIES AUTHORITY

APPROVED BY:

Drawn:
Designed:
Checked:
Date: 12/18/2014
Scale:
Project No:
Sheet No. 14
Of 18 Sheets

ALL WORK SHALL BE CONSTRUCTED IN ACCORDANCE WITH THE LATEST EDITION OF THE E.C.U.A. STANDARD SPECIFICATIONS

Power Panel Fuse Schedule				
Fuse	Type	Voltage	Amps	Description
F1	KTK-R-1	600	1A	PM1 Phase Monitor A Phase
F2	KTK-R-1	600	1A	PM1 Phase Monitor B Phase
F3	KTK-R-1	600	1A	PM1 Phase Monitor C Phase
F12	AGC-3	250	3A	Power Supply 1 Primary
F13	AGC-3	250	3A	Power Supply 2 Primary
F38	KTK-R-1	600	1A	PM2 Power Monitor A Phase
F39	KTK-R-1	600	1A	PM2 Power Monitor B Phase
F40	KTK-R-1	600	1A	PM2 Power Monitor C Phase
F41	KTK-R-6/10	600	.6A	Power Monitor

Pump 1 Panel Fuse Schedule				
Fuse	Type	Voltage	Amps	Description
F4	A70PXX-X	700	XXXA	Pump 1 Phase A
F5	A70PXX-X	700	XXXA	Pump 1 Phase B
F6	A70PXX-X	700	XXXA	Pump 1 Phase C
F7	AGC-1	250	1A	Pump 1 Control Power

*SEE SHEET 11 FOR FUSE TYPE AND AMPACITY

Pump 2 Panel Fuse Schedule				
Fuse	Type	Voltage	Amps	Description
F8	A70PXX-X	700	XXXA	Pump 2 Phase A
F9	A70PXX-X	700	XXXA	Pump 2 Phase B
F10	A70PXX-X	700	XXXA	Pump 2 Phase C
F11	AGC-1	250	1A	Pump 2 Control Power

*SEE SHEET 11 FOR FUSE TYPE AND AMPACITY

Control Panel Fuse Schedule				
Fuse	Type	Voltage	Amps	Description
F14	AGC-10	250	10A	Power Supply 1 Secondary
F15	AGC-10	250	10A	Power Supply 2 Secondary
F16	AGC-10	250	10A	Control Power
F17	AGC-10	250	10A	Batteries
F18	AGC-2	250	2A	Radio Power Supply Primary
F19	AGC-2	250	2A	Radio Power Supply Secondary
F20	AGC-1/4	250	1/4A	Pump 1 Motor Thermal
F21	AGC-1/4	250	1/4A	Pump 2 Motor Thermal
F22	AGC-1/10	250	1/10A	Operator Interface
F23	AGC-1	250	1A	Digital Inputs 0.0-1.4
F24	AGC-1	250	1A	Digital Inputs 1.5-2.7
F25	AGC-2	250	2A	Digital Outputs 0.0-0.7
F26	AGC-2	250	2A	Digital Outputs 1.0-1.7
F27	AGC-1-1/2	250	1-1/2A	PLC Power
F28	AGC-3/4	250	3/4A	Process Transmitter Supply
F29	AGC-1/10	250	1/10A	Analog Inputs
F30	AGC-1/10	250	1/10A	Analog Outputs
F31	GMA-1/4	250	1/4A	Analog Input 2
F32	GMA-1/4	250	1/4A	Analog Input 3
F33	GMA-1/4	250	1/4A	Analog Input 4

HMI BUTTON LEGEND	
F1	FAULT RESET/ENABLE INTRUSION
SHIFT+F1	DISABLE INTRUSION
F2	ALTERNATE PUMP ASSIGNMENTS
F3	RESET PUMP 1 RUNTIME
SHIFT+F3	RESET PUMP 2 RUNTIME
F4	ALARMS SCREEN
F5	OVERVIEW SCREEN
F6	PUMP 1 SCREEN
F7	PUMP 2 SCREEN
F8	SETPOINTS SCREEN

CONTROL PANEL ISR INFORMATION TAGS

THIS AREA IN BLUE IS FOR INTRINSICALLY SAFE CIRCUITS AND DEVICES ONLY. THIS AREA INCLUDES THE AIR SPACE DIRECTLY IN FRONT OF THE BLUE AREA BETWEEN THE BACKPANEL AND THE ENCLOSURE WALLS AND DOOR INCLUDING THE BOTTOM OF THE ENCLOSURE. ONLY INTRINSICALLY SAFE DEVICES AND WIRING ARE ALLOWED IN THIS AREA. DO NOT ROUTE NON–INTRINSICALLY SAFE WIRING THROUGH THIS AREA OF ENCLOSURE.

WARNING

SUBSTITUTION OF COMPONENTS MAY IMPAIR INTRINSIC SAFETY

VFD 1 & 2 INCOMING FUSE TAG INFORMATION

WARNING

FUSES FEED FROM BOTTOM SIDE

CONTROL PANEL EXTERIOR TAG INFORMATION

WARNING

TO PREVENT IGNITION OF FLAMMABLE OR COMBUSTIBLE ATMOSPHERES DISCONNECT POWER BEFORE SERVICING

PROVIDES INTRINSICALLY SAFE CIRCUIT EXTENSIONS FOR USE IN CLASS 1, GROUPS A, B, C, AND D WHEN CONNECTED PER REFERENCE DRAWINGS ON MAIN NAMEPLATE LABEL

CONTROL PANEL DEADFRONT TAG INFORMATION

SECURELY FASTEN ALL INNER DOOR LATCHES BEFORE CLOSING OUTER DOOR. FAILURE TO FOLLOW THESE INSTRUCTIONS COULD CAUSE THE OUTER DOOR TO JAM WHEN RE–OPENED

Nameplate Data								
Total Load (FLA)	54	61	67	79	91	107	138	164
Motor Hp	1	2	3	5	7.5	10	15	20
Motor FLA	4.2	6.8	9.6	15.2	22	28	42	54

Torque Rating Table								
Component	Horsepower							
	1	2	3	5	7.5	10	15	20
Incoming Distribution Block (PDB1)	120lb-in/13.5N-m	120lb-in/13.5N-m	120lb-in/13.5N-m	120lb-in/13.5N-m	120lb-in/13.5N-m	275lb-in/31.0N-m	275lb-in/31.0N-m	275lb-in/31.0N-m
Incoming Neutral Block	45lb-in/5.1N-m	45lb-in/5.1N-m	45lb-in/5.1N-m	45lb-in/5.1N-m	45lb-in/5.1N-m	45lb-in/5.1N-m	45lb-in/5.1N-m	45lb-in/5.1N-m
Main Ground Block	25lb-in/2.8N-m	25lb-in/2.8N-m	25lb-in/2.8N-m	25lb-in/2.8N-m	35lb-in/3.9N-m	35lb-in/3.9N-m	35lb-in/3.9N-m	35lb-in/3.9N-m
Motor Distribution Block (PDB2 & 3)	35lb-in/4.0N-m	35lb-in/4.0N-m	35lb-in/4.0N-m	35lb-in/4.0N-m	35lb-in/4.0N-m	40lb-in/4.5N-m	120lb-in/13.5N-m	120lb-in/13.5N-m
Motor Ground Block	35lb-in/4.0N-m	35lb-in/4.0N-m	35lb-in/4.0N-m	35lb-in/4.0N-m	35lb-in/4.0N-m	40lb-in/4.5N-m	45lb-in/5.1N-m	45lb-in/5.1N-m

REVISIONS	BY

IMPROVEMENTS TO WASTEWATER COLLECTION SYSTEM

LIFT STATION CONSTRUCTION DETAILS

ELECTRICAL STANDARDS

EMERALD COAST UTILITIES AUTHORITY

APPROVED BY:

Drawn:
Designed:
Checked:
Date: 12/18/2014
Scale:
Project No:
Sheet No. 15
Of 18 Sheets

ALL WORK SHALL BE CONSTRUCTED IN ACCORDANCE WITH THE LATEST EDITION OF THE E.C.U.A. STANDARD SPECIFICATIONS

PHOENIX CONTACT GmbH & Co. KG
Flachsmarktstraße 8, 32825 Blomberg, Germany
Fax +49-(0)5235-341200, Phone +49-(0)5235-300
www.phoenixcontact.com

MNR 9040234 / 2010-11-03

CONTROL / INSTALLATION DRAWING
MACX MCR-EX Series

Doc.-No.: 83104549-04

Art.Nr.	Model Number
2865476	MACX MCR-EX-SL-2NAM-RO
~~2924087~~	~~MACX MCR-EX-SL-2NAM-RO-SP~~

WARNING – EXPLOSION HAZARD – Substitution of components may impair suitable for Class I, Division 2.

WARNING – EXPLOSION HAZARD – Do not disconnected equipment unless power has been removed or the area is known to be non-hazardous.

WARNING – Exposure to some chemicals may degrade the sealing properties of materials used in the sealed relays.

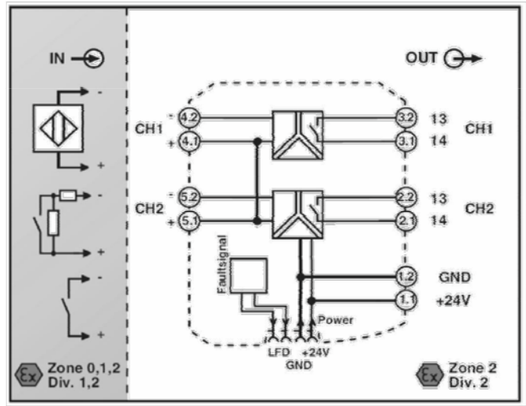

HAZARDOUS AREA
Class I, Division 1, Groups A,B,C,D
Class II, Division 1, Groups E,F,G
Class III, Division 1
Class I, Zone 0,1,2, Groups IIC,IIB,IIA

NON HAZARDOUS AREA
or Class I, Division 2, Groups A,B,C,D
or Class I, Zone 2, Groups IIC,IIB,IIA

I. The Entity Concept allows interconnection of intrinsically safe apparatus with associated apparatus not specifically examined in combination as a system. Selected Intrinsically Safe Equipment must be third party listed as intrinsically safe for the application and have intrinsically safe entity parameters conforming with table 1 below:

Tabelle1:

I.S. Equipment		Associated Apparatus
V max (or Ui)	≥	Voc or Vt (or Uo)
I max (or Ii)	≥	Isc or It (or Io)
P max (or Pi)	≥	Po
Ci + Ccable	≤	Ca (or Co)
Li + Lcable	≤	La (or Lo)

II. Capacitance and inductance of the field wiring from the intrinsically safe equipment to the associated apparatus shall be calculated and must be included in the system calculations as shown under **I**. Where the cable capacitance and inductance per foot are not known, the following values shall be used: Ccable = 60 pF / ft., Lcable = 0.2 µH / ft.

III. The output current of this associated apparatus is limited by a resistor such that the output voltage-current plot is a straight line drawn between open-circuit voltage and short-circuit current.

IV. This associated apparatus has not been evaluated for use in combination with another associated apparatus.

V. This associated apparatus may also be connected to simple apparatus as defined in Article 504.2 and installed and temperature classified in accordance with Article 504.10(B) of the National Electrical Code (ANSI/NFPA70), or other local codes applicable.

VI. Associated apparatus must be installed in an enclosure (which meets the requirements of ANSI/ISA S82) suitable for the application in accordance with the National Electrical Code (ANSI/NFPA 70) for installation in the United States, the Canadian Electrical Code for installation in Canada, or other local codes, as applicable.

VII. When using as non-incendive device for Class I, Division 2 or Class I, Zone 2 do not snap equipment onto or off the T-connector, or connect and disconnect non-intrinsically safe-lines unless power has been removed or the area is known to be non hazardous.

VIII. Intrinsically safe circuits must be wired separately in according with Article 504.20 of the National Electrical Code (ANSI/NFPA 70) for installation in the United States, the Canadian Electrical Code Part 1, Appendix F for installation in Canada, or other local codes, as applicable.

IX. When multiple circuits extend from the same piece of associated apparatus, they must be installed in separate cables or in one cable having suitable insulation. Refer to Article 504.30(B) of the National Electrical Code (ANSI/NFPA 70) and Instrument Society of America Recommended Practice ISA RP12.6 for installing intrinsically safe equipment.

X. When using as non-incendive device for Class I, Division 2 or Class I, Zone 2 with exposure to some chemicals a periodically inspect of the relays for any degradation of properties and a replacement if degradation is found is recommended.

		output circuit - hazardous zone						Group A, B or IIC		Group C or IIB		Group D or IIA		input circuit - hazardous zone				
Art.Nr.	Model Number	Terminal	Voc or Uo / Vdc	Isc or Io / mA	Po / mW	Ci / nF	Li / mH	Ca or Co / nF	La or Lo / mH	Ca or Co / nF	La or Lo / mH	Ca or Co / nF	La or Lo / mH	Terminal	Vmax or Ui / V	Imax or Ii / mA	Ci / nF	Li / mH
2865476	MACX MCR-EX-SL-2NAM-RO	4.1-4.2 5.1.5.2	9,6	10	25	1,1	negligible	510 840 1200 3600	100 5 1 0,01	2700 4400 6300 26000	100 5 1 0,01	-	-	-	-	-	-	-
~~2924087~~	~~MACX MCR-EX-SL-2NAM-RO-SP~~	4.1-4.2 5.1.5.2	9,6	10	25	1,1	negligible	510 840 1200 3600	100 5 1 0,01	2700 4400 6300 26000	100 5 1 0,01	-	-	-	-	-	-	-

		power supply circuit				Max. Surrounding Air Temperature Rating: 60°C	signal circuit - safe zone			interface circuit
Art.Nr.	Model Number	Terminal	T-Connector	Un = 24 V - 20% +25% U range	Um	Ambient Temperature Range: Tamb	Terminal	output	input	socket
2865476	MACX MCR-EX-SL-2NAM-RO	1.1-1.2	yes	19,2 ... 30 V DC	253 V AC / 125 V DC	-20...+60°C	3.1-3.2 + 2.1-2.2	X	-	-
~~2924087~~	~~MACX MCR-EX-SL-2NAM-RO-SP~~	~~1.1-1.2~~	~~yes~~	~~19,2 ... 30 V DC~~	~~253 V AC / 125 V DC~~	~~-20...+60°C~~	~~3.1-3.2 + 2.1-2.2~~	~~X~~	~~-~~	~~-~~

© PHOENIX CONTACT 2010

Doc.-No. 83083052-03 10353203

REVISIONS	BY

IMPROVEMENTS TO WASTEWATER COLLECTION SYSTEM
LIFT STATION CONSTRUCTION DETAILS
ELECTRICAL STANDARDS

EMERALD COAST UTILITIES AUTHORITY

APPROVED BY:

Drawn:
Designed:
Checked:
Date: 12/18/2014
Scale:
Project No:
Sheet No. 16
Of 18 Sheets

GENERAL ELECTRICAL NOTES

NEW WORK:

1. ENTIRE ELECTRICAL INSTALLATION SHALL BE IN ACCORDANCE WITH THE LATEST EDITION (UNLESS NOTED OTHERWISE) OF THE FOLLOWING CODES AND STANDARDS:
   1.1. NATIONAL ELECTRICAL CODE (NFPA 70).
   1.2. STANDARD FOR FIRE PROTECTION IN WASTEWATER TREATMENT AND COLLECTION FACILITIES (NFPA 820).
2. THE CONTRACTOR SHALL BE RESPONSIBLE FOR READING ALL PROJECT SPECIFICATIONS AND WILL BE RESPONSIBLE FOR MEETING ALL REQUIREMENTS OUTLINED IN THE SPECIFICATIONS.
3. CONTRACTOR SHALL COORDINATE ALL WORK WITH OTHER TRADES PRIOR TO ROUGH-IN AND INSTALLATION.
4. WORKING SPACE FOR ALL ELECTRICAL AND CONTROL EQUIPMENT OPERATING AT 600V VOLTS OR LESS TO GROUND AND LIKELY TO REQUIRE EXAMINATION, ADJUSTMENT, SERVICING, OR MAINTENANCE WHILE ENERGIZED SHALL COMPLY WITH NEC, ARTICLE 110.26.
5. THE ELECTRICAL DESIGN PROVIDES A NUMBER OF BRANCH CIRCUITS, AMPACITY AND OVERCURRENT PROTECTION FOR OTHER DIVISIONS DESIGN BASIS EQUIPMENT CONFORMING TO MANUFACTURER'S SPECIFICATIONS AVAILABLE AT TIME OF DESIGN. THE CONTRACTOR SHALL VERIFY ALL EQUIPMENT LOADS PRIOR TO ROUGH-IN. IF REQUIREMENTS OF EQUIPMENT ACTUALLY PROVIDED UNDER CONTRACT FOR CONSTRUCTION ARE DIFFERENT, CONTRACTOR SHALL MAKE ALL CHANGES NECESSARY WITHOUT INCREASE IN THE CONTRACT AMOUNT. SUCH CHANGES SHALL BE BASED UPON REQUIREMENTS, NAMEPLATE VALUES AND CODE REQUIREMENTS, WHICHEVER IS MORE STRINGENT, AND MAY INCLUDE, BUT ARE NOT LIMITED TO: SIZE OF CONDUCTORS, SIZE OF CONDUIT, QUANTITY OF CONDUCTORS AND CONDUITS, TYPE AND SIZE OF CIRCUIT BREAKER OR DISCONNECT, OVERLOADS, FULL-VOLTAGE STARTERS, REDUCED VOLTAGE SOFT STARTERS, VARIABLE FREQUENCY DRIVES, AND FUSE PROTECTION.
6. THE ELECTRICAL CONTRACTOR IS REQUIRED TO COORDINATE, PROVIDE, AND INSTALL A FULLY OPERATIONAL AND CODE COMPLIANT ELECTRICAL SYSTEM. THIS MAY INCLUDE THE ADDITION OF ELECTRICAL ITEMS NOT SHOWN ON THE ELECTRICAL PLANS, BUT REQUIRED FOR SYSTEM OPERATION.
7. CONTRACTOR SHALL COORDINATE INSTALLATION OF ELECTRICAL SERVICE WITH ELECTRICAL UTILITY COMPANY PROVIDING ELECTRICAL SERVICE TO FACILITY. CONTRACTOR SHALL PAY ALL FEES ASSESSED BY ELECTRICAL UTILITY COMPANY TO PROVIDE ELECTRICAL SERVICE TO FACILITY.
8. CONTRACTOR SHALL EXCAVATE AND CONDUCT DEMOLITION SO AS TO AVOID DAMAGE TO EXISTING UTILITIES AND OTHER UNDERGROUND OR CONCEALED ITEMS. IF EXISTING OR NEW ITEMS ARE DAMAGED, THE CONTRACTOR SHALL NOTIFY THE OWNER AT ONCE OF ALL DAMAGE AND SHALL REPAIR (OR REPLACE IF NECESSARY) TO THE ORIGINAL CONDITION TO THE SATISFACTION OF OWNER AND ENGINEER AT NO CHARGE IN THE CONTRACT AMOUNT.
9. THE CONTRACTOR SHALL BE RESPONSIBLE FOR PROVIDING DETAILED ELECTRICAL AND CONTROL EQUIPMENT LAYOUT DRAWINGS TO THE ENGINEER AND OWNER FOR APPROVAL PRIOR TO INSTALLATION.
10. ALL CONDUITS NOT LOCATED UNDER SLAB SHALL HAVE A MINIMUM BURIAL DEPTH OF 42", UNLESS NOTED OTHERWISE.
11. CONDUITS SHALL BE BURIED 42" (MINIMUM) BELOW GRADE WITH MARKER TAPE 6" ABOVE TOP OF CONDUIT, UNLESS NOTED OTHERWISE.
12. MINIMUM SIZE CONDUIT SHALL BE 1" (UNLESS NOTED OTHERWISE).
13. CONDUIT ROUTINGS AND DEVICE/EQUIPMENT LOCATIONS SHOWN ARE DIAGRAMMATIC ONLY. CONTRACTOR SHALL FIELD ROUTE AND LOCATE AS REQUIRED.
14. CONTRACTOR SHALL PROVIDE PULL BOXES IN POWER CIRCUIT CONDUIT AS REQUIRED TO LIMIT THE NUMBER OF BENDS TO A MAXIMUM OF 270° OR THREE 90° BENDS.
15. ALL WIRE SHALL BE COPPER.
16. ALL ELECTRICAL CIRCUITS SHALL INCLUDE A GREEN GROUNDING CONDUCTOR SIZED PER NEC.
17. CONDUCTORS SHALL BE TERMINATED ON TERMINAL BLOCKS.
18. THE CONTRACTOR SHALL TAG ALL POWER AND CONTROL SYSTEM CABLING AT ALL TERMINATION POINTS.
19. FINAL CONNECTION TO ALL EQUIPMENT IS SHOWN DIAGRAMMATIC. PROVIDE FINAL CONNECTION AS REQUIRED PER MANUFACTURER OF EQUIPMENT.
20. CONTRACTOR SHALL MAINTAIN A SET OF PRINTS AND MARK-UP DURING CONSTRUCTION TO REFLECT "AS-BUILT" CONDITIONS. PRINTS SHALL BE DELIVERED TO THE ENGINEER UPON COMPLETION OF THE PROJECT.
21. ALL HARDWARE SHALL BE STAINLESS STEEL.
22. ALUMINUM CONDUIT SHALL BE COATED WITH (2) WRAPS OF ANTI-CORROSION TAPE OR RUN THROUGH A SCHEDULE 80 PVC SLEEVE TO WHEN IN CONTACT WITH CONCRETE.
23. BARE COPPER SHALL BE COATED WITH (2) WRAPS OF ANTI-CORROSION TAPE OR RUN THROUGH A SCHEDULE 80 PVC SLEEVE TO WHEN IN CONTACT WITH CONCRETE.
24. ENGINEER OF RECORD SHALL BE RESPONSIBLE FOR FINAL SIZING OF ALL EQUIPMENT.

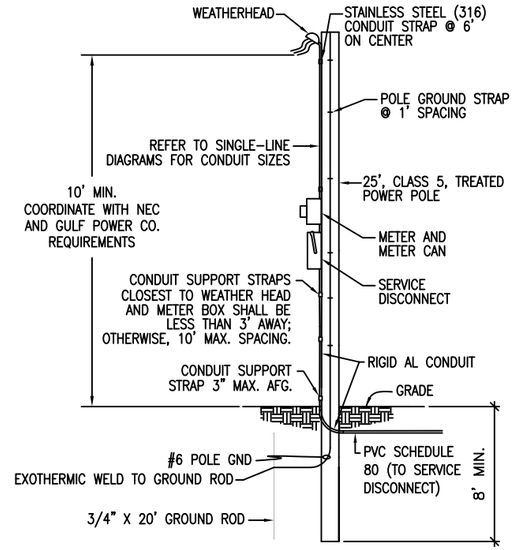

SERVICE LATERAL CONDUIT SHALL BE 3" (MIN) SCHEDULE 80 PVC BELOW GRADE AND 3" (MIN) RIGID AL CONDUIT ABOVE GRADE. ANY REQUIREMENTS BY THE UTILITY COMPANY SHALL PREVAIL OVER THE REQUIREMENTS OUTLINED HERE AND SHALL BE COORDINATED BY THE ELECTRICAL CONTRACTOR PRIOR TO INSTALLATION.

A3 UTILITY POLE DETAIL
NOT TO SCALE

ALL WORK SHALL BE CONSTRUCTED IN ACCORDANCE WITH THE LATEST EDITION OF THE E.C.U.A. STANDARD SPECIFICATIONS

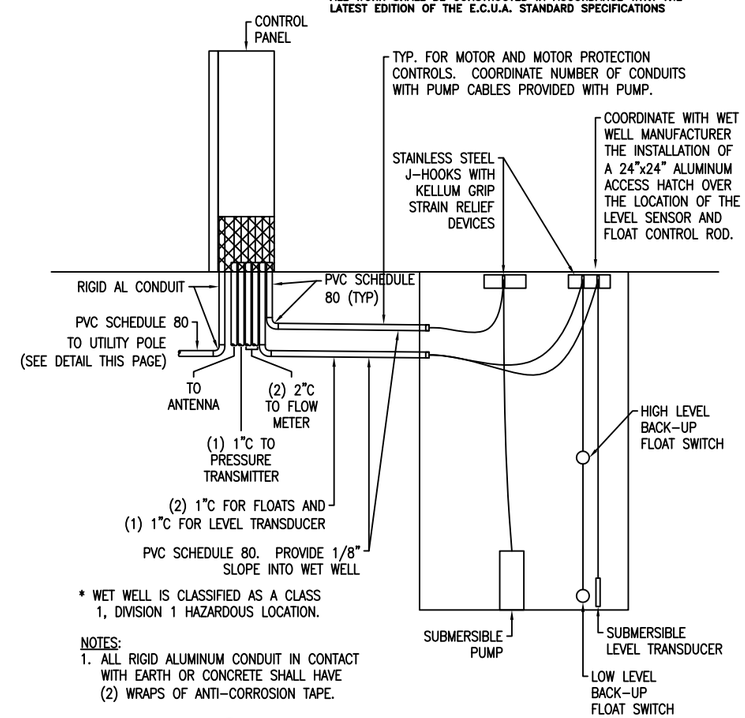

* WET WELL IS CLASSIFIED AS A CLASS 1, DIVISION 1 HAZARDOUS LOCATION.

NOTES:
1. ALL RIGID ALUMINUM CONDUIT IN CONTACT WITH EARTH OR CONCRETE SHALL HAVE (2) WRAPS OF ANTI-CORROSION TAPE.

B4 TYPICAL WET WELL SECTION DETAIL
NOT TO SCALE

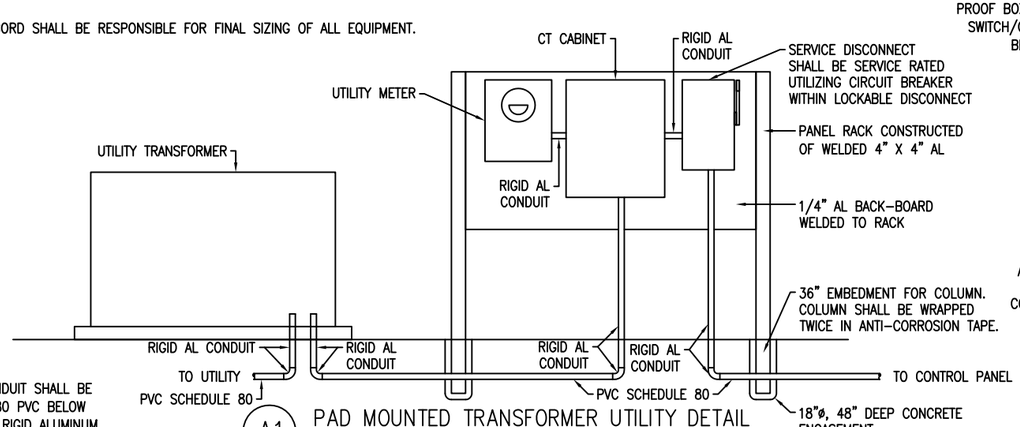

* SERVICE LATERAL CONDUIT SHALL BE 3" (MIN) SCHEDULE 80 PVC BELOW GRADE AND 3" (MIN) RIGID ALUMINUM CONDUIT ABOVE GRADE.

A1 PAD MOUNTED TRANSFORMER UTILITY DETAIL
NOT TO SCALE

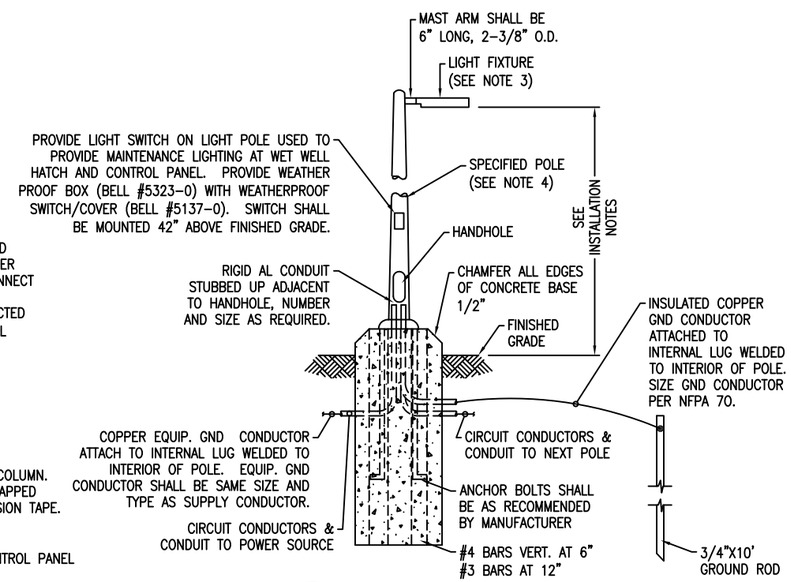

A4 LIGHT POLE INSTALLATION DETAIL
NOT TO SCALE

LIGHTING PERFORMANCE CRITERIA:
1. LIGHTING FIXTURE LAYOUT SHALL BE BASED UPON ACHIEVING 20 FOOT CANDLES (+/- 20%) AT THE FRONT OF THE CONTROL PANEL (WORK-PLANE OF 24" AFG) AND AT THE WET WELL ACCESS HATCH (WORKPLANE OF 0" AFG).
2. GENERAL SECURITY LIGHTING SHALL ENCOMPASS ACCESS GATE AND ALL PIPING/EQUIPMENT AT A MIN: AVERAGE 1 FOOT-CANDLE (+/- 20%, AT WORKPLANE OF 0" AFG).
3. REFER TO LIGHTING CONTROL DIAGRAM ON SHEET No. 18 FOR ADDITIONAL REQUIREMENTS.

LIGHT POLE INSTALLATION NOTES:
1. BURIAL AND DIAMETER DIMENSIONS INDICATED ARE FOR NOMINAL MINIMAL SIZES ONLY. FINAL DIMENSIONS SHALL BE DETERMINED BY A REGISTERED STRUCTURAL ENGINEER IN THE STATE OF FLORIDA. BASED UPON FIXTURES PROVIDED. PROVIDE SIGNED, DATED, AND SEALED PLANS FOR EACH INSTALLATION TYPE AND FIXTURE TYPE AS PART OF LIGHTING SUBMITTAL PACKAGE.
2. THE POLE AND FOUNDATION DESIGN SHALL BE BY A DELEGATED PROFESSIONAL ENGINEER TO MEET THE FOLLOWING CRITERIA:
   2.1. DESIGN WIND SPEED 160 MPH WITH A 1.3 GUST FACTOR. EXPOSURE CATEGORY C.
   2.2. SIZE EMBEDMENT FOR A MAXIMUM PERMANENT POLE DEFLECTION AFTER DESIGN WIND SPEED EVENT OF 1.00°.
   2.3. ALUMINUM, ROUND OR SQUARE, TAPERED.
3. FIXTURE SHALL BE AMERICAN ELECTRIC LIGHTING ATB2 FIXTURE, 40 LED, 1000mA DRIVER, 120V, TYPE 4, WITH PHOTOCONTROL.
4. REFER TO SPECIFICATIONS SECTION 16521 "EXTERIOR LIGHTING" FOR ADDITIONAL REQUIREMENTS.
5. LIGHT FIXTURES SHALL BE MOUNTED AT 15'-0" (MAXIMUM) ABOVE FINISHED GRADE.

REVISIONS	BY

IMPROVEMENTS TO WASTEWATER COLLECTION SYSTEM
LIFT STATION CONSTRUCTION DETAILS
ELECTRICAL STANDARDS

EMERALD COAST UTILITIES AUTHORITY

APPROVED BY:

Drawn:
Designed:
Checked:
Date: 12/18/2014
Scale:
Project No:
Sheet No. 17
Of 18 Sheets

ALL WORK SHALL BE CONSTRUCTED IN ACCORDANCE WITH THE LATEST EDITION OF THE E.C.U.A. STANDARD SPECIFICATIONS

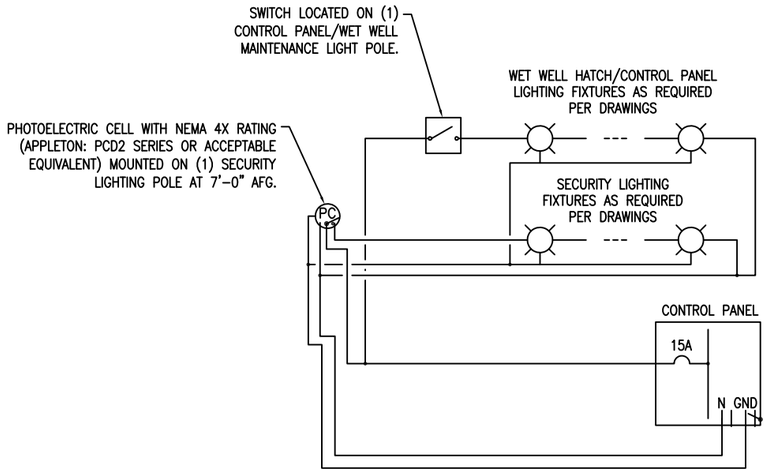

C2 TYPICAL LIGHTING CONTROL DIAGRAM

NOT TO SCALE

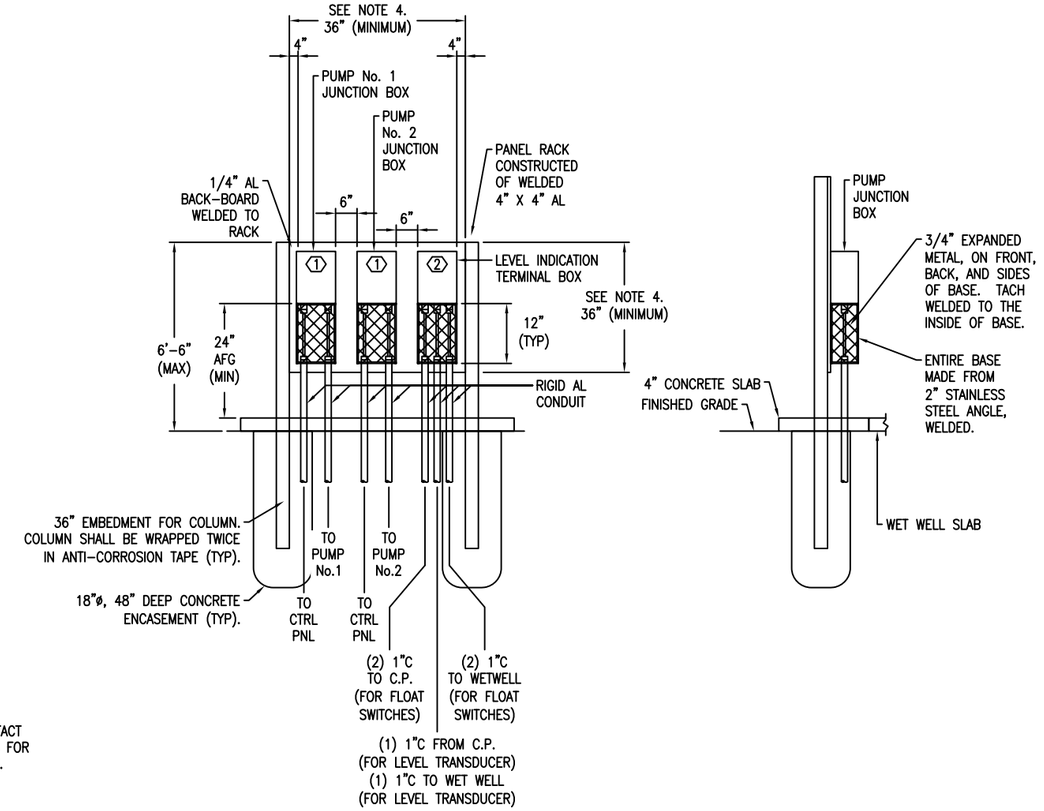

FRONT ELEVATION

SIDE ELEVATION

DETAIL NOTES:

1. THIS DETAIL SHALL ONLY APPLY WHEN THE CONTROL PANEL CANNOT BE PLACED WITHIN 10'-0" OF THE WET WELL TO ALLOW FOR CONNECTION OF STANDARD 50 FOOT PUMP CABLE CONNECTIONS.
2. BACKBOARD SHALL BE PLACED AT THE EDGE OF THE WET WELL SLAB BETWEEN THE WET WELL AND CONTROL PANEL.
3. JUNCTION BOXES SHALL BE MOUNTED SUCH THAT THEY ARE FACING THE WET WELL.
4. ENGINEER/CONTRACTOR SHALL SIZE JUNCTION BOXES AND BACKBOARDS BASED UPON INSTALLATION REQUIREMENTS PROVIDED AT TIME OF DESIGN.

KEY NOTES

1 REFER TO "TYPICAL PUMP JUNCTION BOX ELEVATION" (THIS SHEET) FOR ADDITIONAL REQUIREMENTS.

2 REFER TO "TYPICAL LEVEL INDICATION JUNCTION BOX ELEVATION" (THIS SHEET) FOR ADDITIONAL REQUIREMENTS.

A4 TYPICAL PUMP JUNCTION BOXES

NOT TO SCALE

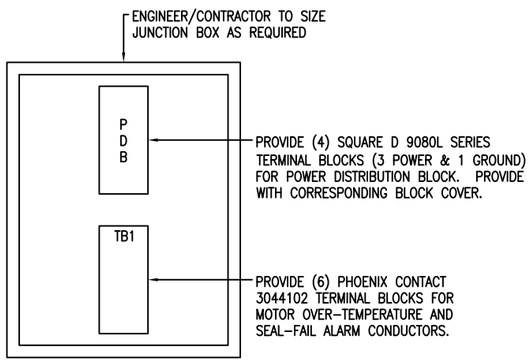

INTERIOR ELEVATION

DETAIL NOTES:

1. ALL TERMINAL BLOCKS SHALL BE PROVIDED WITH CORRESPONDING END BRACKETS AND END COVERS.
2. PROVIDE SEPARATE GROUND LUG IN EACH JUNCTION BOX, BONDED TO JUNCTION BOX.

A1 TYPICAL PUMP JUNCTION BOX ELEVATION

NOT TO SCALE

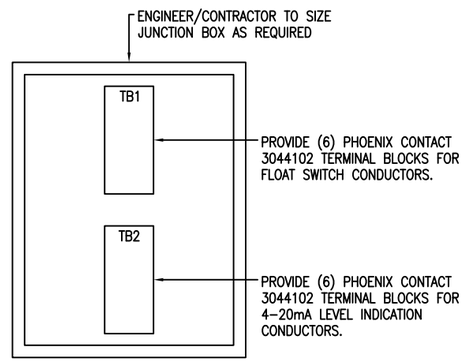

INTERIOR ELEVATION

DETAIL NOTES:

1. ALL TERMINAL BLOCKS SHALL BE PROVIDED WITH CORRESPONDING END BRACKETS AND END COVERS.
2. PROVIDE SEPARATE GROUND LUG IN EACH JUNCTION BOX, BONDED TO JUNCTION BOX.

A3 TYPICAL LEVEL INDICATION JUNCTION BOX ELEVATION

NOT TO SCALE

REVISIONS	BY

IMPROVEMENTS TO WASTEWATER COLLECTION SYSTEM

LIFT STATION CONSTRUCTION DETAILS

ELECTRICAL STANDARDS

EMERALD COAST UTILITIES AUTHORITY

APPROVED BY:

Drawn:
Designed:
Checked:
Date: 12/18/2014
Scale:
Project No:
Sheet No. 18
Of 18 Sheets