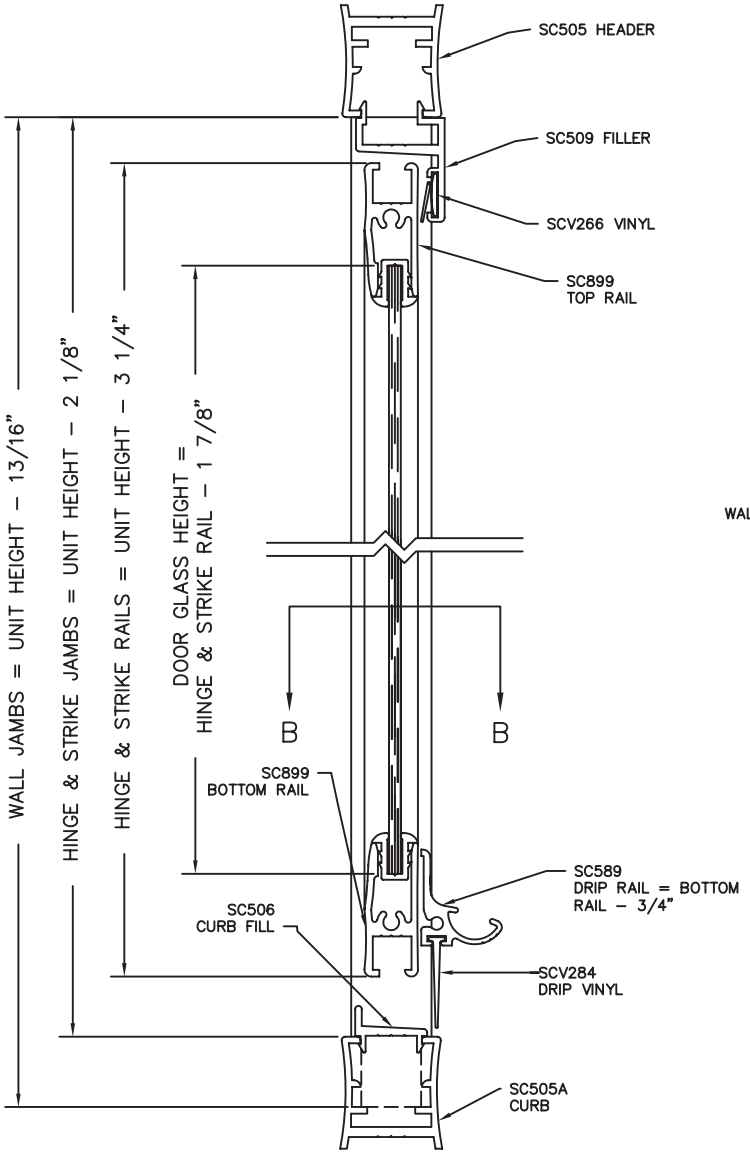

SECTION A–A

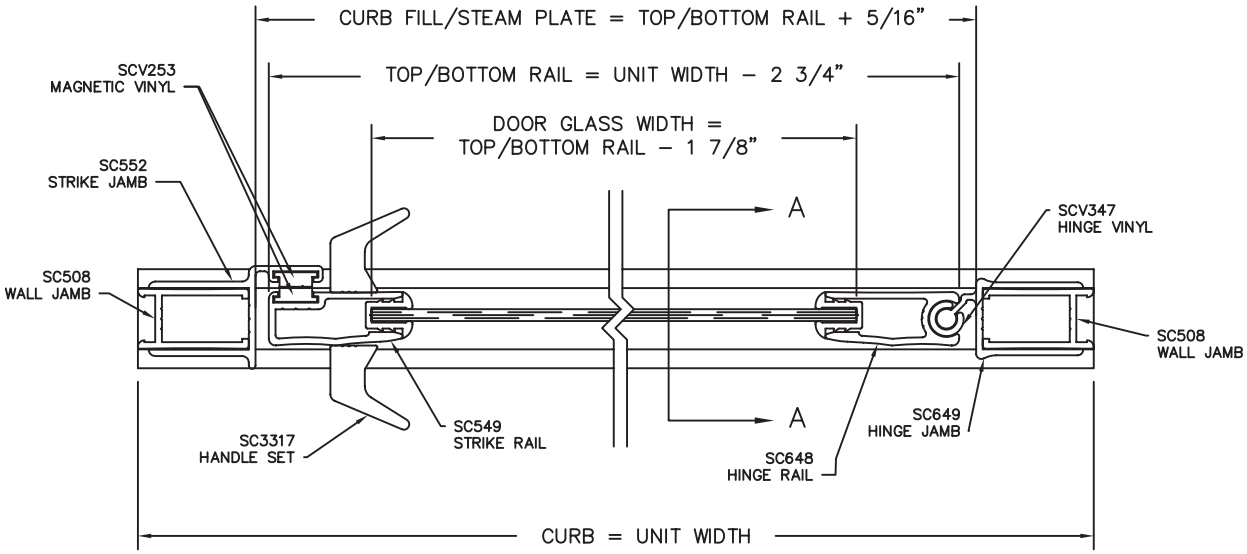

SECTION B–B

ITEM	QTY.	DRAWING / PART NO.	DESCRIPTION

DIMENSIONAL TOLERANCE NOTES:
UNLESS OTHERWISE SPECIFIED

INCH DIMENSIONS		METRIC DIMENSIONS [mm]	
X.XXXX	± .0005	[X.XXX]	± [.013]
X.XXX	± .005	[X.XX]	± [.13]
X.XX	± .01	[X.X]	± [.3]
X.X	± .04	[X]	± [1.0]
ANGLES	± 1/2°	ALL INSIDE CORNERS .02 [.5] RAD. MAX.	
FRACT.	± 1/16"		
MARK PARTS WITH DETAIL # BY STAMPING OR ETCHING		BREAK ALL SHARP CORNERS .02 [.5] X 45° MIN.	

ALL MACHINED SURFACES ARE TO BE $\sqrt[125]{\mu}$ in. [$\sqrt[3.2]{\mu}$ mm] MAX.

DO NOT SCALE THIS DRAWING

LET.	INIT.	DATE	DESCRIPTION

REVISIONS

3rd ANGLE PROJECTION

This Drawing is the sole property of BASCO Inc. It shall not be copied or reproduced by any means and should not be submitted to any outside party without the written consent of BASCO Inc. This drawing is to be used in good faith, and as a reference document for our project only. This drawing is subject to recall at any time.

DESIGNED BY: DV	DATE: 09/06/06
DETAILED BY: JRS	DATE: 09/06/06
CHECKED BY: PS	DATE: 09/06/06
SHT No. 1 / TOTAL 1	SCALE: NTS

BASCO
SHOWER ENCLOSURES
7201 SNIDER ROAD, MASON, OHIO 45040-9601
PHONE: 866.686.5435 FAX: 877.686.5435

DRAWING TITLE
ASSEMBLY
18CS CONTINUOUS HINGE
STEAM DOOR

DRAWING NUMBER (Autocad file no.)
18CS DETAIL SHEET

REVISION