Pricing and Reference Guide for

Parts

Parts Price List 0825, Rev. 101226
Issued August 2025
Rev. October 12, 2026

List Prices are in US Dollars
Prices Subject to Change Without Notice
Terms 30 Days
www.bascoshowerdoor.com

BASCO®
SHOWER ENCLOSURES

Table of Contents

Ordering

Process & Ordering Examples 3

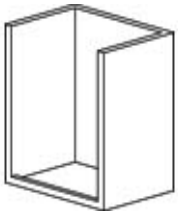

Inline Configurations

Bypass Models
3/8” Semi-Frameless Tub/Shower *(CELH/A-905 Celesta)* ..... 4 - 5
3/8” & 1/4” Frameless Shower *(RTXH-905 & 5550 Rotolo Lux)* ..... 6 - 7
3/8” & 1/4” Frameless Shower *(RTXS-905 & 5650 Rotolo Lux SLIM)* ..... 8 - 9
3/8” & 1/4” Semi-Frameless Shower *(RTLH/A-905 & 5500 Rotolo)* ..... 10 - 11
3/8” & 1/4” Semi-Frameless Tub/Shower *(RTLS-905 & 5600 Rotolo SLIM)* ..... 12 - 13
1/4” Semi-Frameless Tub/Shower *(4400/4500 Infinity)* ..... 14 - 15
Semi-Frameless Tub/Shower *(3505 Classic)* ..... 16 - 17
Framed Tub/Shower *(6150/7150 Deluxe)* ..... 18 - 19

Single Swing Models
1/4” Semi-Frameless *(1400 Infinity)* ..... 20 - 21
Framed *(100 Deluxe)* ..... 22 - 23
Framed Steam Door *(18CS Deluxe)* ..... 24 - 25
1/4” Semi-Frameless Bifold Door *(1433 Infinity)* ..... 26 - 27
1/4” Semi-Frameless French Doors *(1022 & 1422 Infinity)* ..... 28 - 29

Swing Door & Panel(s) Models
1/4” Semi-Frameless Panel/Door/Panel *(1412 Infinity)* ..... 30 - 31
Framed Panel/Door/Panel *(125 Deluxe)* ..... 32 - 33
1/4” Semi-Frameless Door & 3/8” Inline Panel *(1435 Fusion)* ..... 34 - 35
1/4” Semi-Frameless Door & Inline Panel *(1413 Infinity)* ..... 36 - 37
1/4” Semi-Frameless Door & Inline Panel - No POST *(1413NP Infinity)* ..... 38 - 39
Framed Door & Inline Panel *(135 Deluxe)* ..... 40 - 41

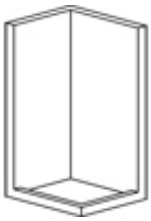

Return Panel Configurations

Swing Door & Panel(s) Models
1/4” Semi-Frameless Door & Return Panel *(1414 Infinity)* ..... 42 - 43
Framed Door & Return Panel *(145 Deluxe)* ..... 44 - 45
1/4” Semi-Frameless Door, 3/8” Inline & Return Panels *(1450 Fusion)* ..... 46 - 47
1/4” Semi-Frameless Door, Inline Panel & Return Panel *(1415 Infinity)* ..... 48 - 49
1/4” Semi-Frameless Door, Inline Panel & Return Panel - No Post *(1415NP Infinity)* ..... 50 - 51
Framed Door, Inline Panel & Return Panel *(150 Deluxe)* ..... 52 - 53

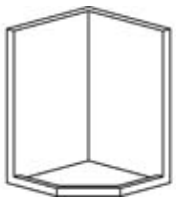

Neo Angle Configurations

Swing Door & Panel(s) Models
1/4” Semi-Frameless Neo Angle *(1416 Infinity)* ..... 54 - 55
Framed Neo Angle *(160 Deluxe)* ..... 56 - 57

Additional Misc. Parts 58

Discontinued & Legacy Models

Table of Contents for Discontinued & Legacy Models 59
Inline Configurations ..... 60 - 87
Return Configurations ..... 88 - 99
Neo Angle Configurations ..... 100 - 107

Process for Ordering Replacement Parts

Our limited lifetime warranty covers component replacement for the original owners who register their Basco/RODA shower doors at time of purchase or those who supply proof of purchase, with the exception of wear parts which are covered for 1 year. Within 1 year from date of original purchase shipping and handling of these items is also no cost to the registered homeowner.

Fees will be applicable for wear parts and shipping and handling charges will apply to all shipments after 1 year from date of purchase. Please provide a purchase order number for invoicing for these charges with your order. To simplify the ordering process homeowners may elect to provide their credit card information to us to ship direct or visit the Basco Parts Store at www.bascoshowerdoor.com where they can view available options and purchase parts online.

Ordering Examples

"Cut to Size" Parts

Parts listed as "Cut to Size" are cut or machined for specific units. Please refer to the schematic view of the specific unit to determine needed parts. The shaded area is for example only, the Part Letter is NOT required when ordering. "Cut to Size" orders require quantity, part number (including the "X"), frame color, and a complete description of the original unit.

B	1	SCX624	SV	2850-60CLSV
Part Letter *Refer to 2850/3850 Drawing*	Quantity *Cut to Size 1-Pc.*	Part Number *Celesta Tub Track*	Color *Chrome*	Complete Description *of Original Unit*

"Each" Parts

Parts listed as "Each" are also shown on the corresponding schematic view. To place your order, supply quantity and part number. In some instances, frame color is also required.

C	6	SC4106
Part Letter *Refer to 2850/3850 Drawing*	Quantity *6-Pcs.*	Part Number *Plastic Wall Anchors*

"Lengths", "Boxes", or "Additional" Parts

To place orders for "Lengths", "Boxes", or "Additional Parts" (shown on page 62), simply supply us with the quantity, part number and frame selection code.

1	SC850	BN
Quantity *1 - 6'0" Length*	Part Number *Wall Filler*	Color *Brushed Nickel*

Finish Selections (Code)

Chrome (SV)	Brushed Nickel (BN) Oil Rubbed Bronze (OR)	Bronze (BR), Brushed Bronze (BB), Brushed Gold (BG) Satin Nickel (SN), White (WP), Matte Black (WI)

Inline Configurations

Bypass **Tub/Shower**

3/8" Semi-Frameless Celesta (CELH-905 - *formerly 2850/3850*)

To insure correct fit when ordering cut to size parts, please indicate complete original unit number.

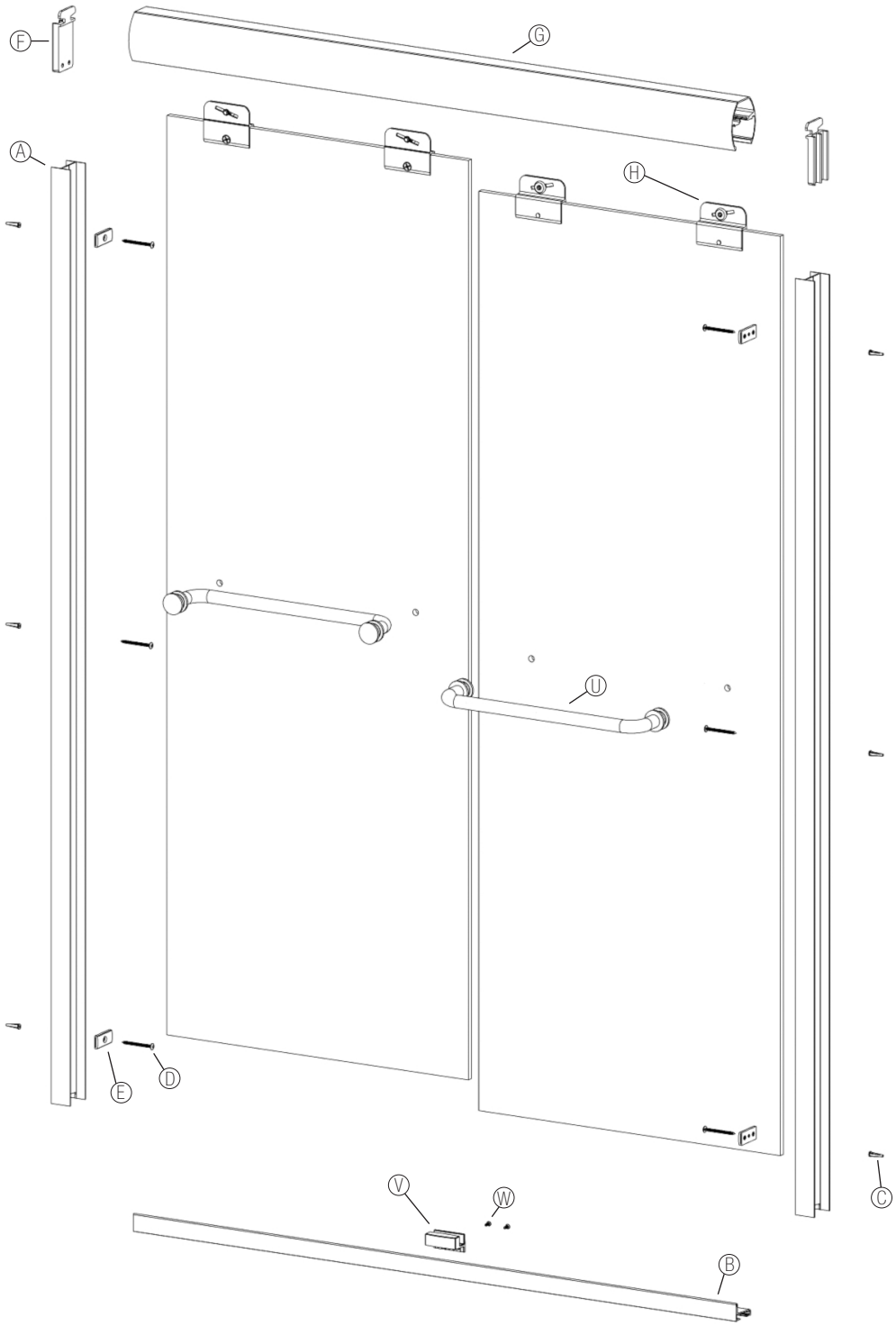

H (SC1615A) Exploded View

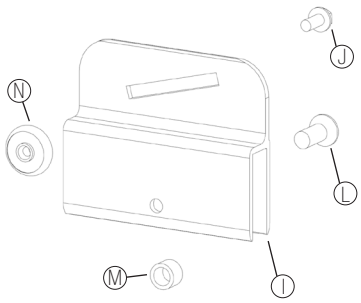

Notes

PPHVY51 Parts Pack Includes: Letters E, V, W, D, C, F
Fillers for out of plumb conditions:
SC629* for tub/shower (horizontal). SC647* for walls (vertical).

CELH-905 *(former 2850/3850)* Parts Listing

Part Letter	Part Number	Description	Qty/Unit	Length/Each	Chrome *(SV)*	Brushed Nickel *(BN)*, Oil Rubbed Bronze *(OR)*	All other finishes *(see below)*
A	SCX622	Wall Jamb	(2)	Cut to Size	92.42	117.83	133.56
B	SCX624	Tub Track	(1)	Cut to Size	86.97	112.38	128.11
C	SC4106	Plastic Wall Anchor	(6)	Each	0.29	-	-
D	SCR15	#8 x 2" Truss Head Screw	(6)	Each	0.43	0.43	-
E	SC4347	Bumper	(4)	Each	2.04	-	-
F	SC4339	Nylon T-Lock	(2)	Each	3.61	-	-
G	SCX623	Header	(1)	Cut to Size	233.81	259.22	274.95
H	SC1615A *(Includes parts I, J, L, M & N)*	Top Rail Hanger Bracket Assembly	(4)	Each	Purchase each individual part		
I	SC1615	Hanger Bracket	(4)	Each	22.52	25.99	31.19
J	SCR44	#8 x 3/8" Hex Head Roller Screw	(4)	Each	0.43	-	-
L	SCR38	1/4" x 9/16" Flat Head Screw	(4)	Each	1.35	-	-
M	SC4582	Glass Hole Sleeve	(4)	Each	2.37	-	-
N	SC4357	Heavy Glass Roller	(4)	Each	9.13	-	-
	BSFW	T-bar fastner with front/back plates	(4)	Each	17.02	20.43	29.41
U	CELTS-012	12" Towel Bar Asmbly - f/40" unit	(2)	Each	48.00	51.00 (BN) 70.00 (OR)	70.00 (WI) 112.00 (Others)
U	CELTS-018	18" Towel Bar Asmbly - f/>56" unit	(2)	Each	54.00	57.00 (BN) 76.00 (OR)	76.00 (WI) 137.00 (Others)
U	CELTS-024	24" Towel Bar Asmbly - f/>72" unit	(2)	Each	60.00	63.00 (BN) 82.00 (OR)	82.00 (WI) 142.00 (Others)
V	SC4047	Bottom Guide	(1)	Each	4.87	-	-
W	SCR24	#6 x 3/8" Pan Head Screw	(2)	Each	0.43	-	-
Y	BAS-NP	Basco Name Plate	(1)	Each	1.10	-	-
	PPHVY51	Installation Parts Pack for 2850/3850		Each	71.24	-	-
	SCX629*	Tub/Curb Filler		Cut to Size	97.00	116.00	156.00
	SCX647*	Wall Filler		Cut to Size	95.00	114.00	153.00
	SCV190-67	Tub Track Insert		Each	4.57	-	-
	SC4340-38	Anti-Jump Clip	(1)	Set of 3	24.26	-	-

***Please specify taper if needed and add $45.00 (SCTAPERCHARGE)**

Finish Selections (Code)

Chrome (SV)	Brushed Nickel (BN), Oil Rubbed Bronze (OR)	Bronze (BR), Satin Nickel (SN), White (WP), Matte Black (WI)

Inline Configurations

To insure correct fit when ordering cut to size parts, please indicate complete original unit number.

Bypass **Tub/Shower**

3/8" Semi-Frameless Rotolo Lux (RTXH-905)
1/4" Semi-Frameless Rotolo Lux (5550)

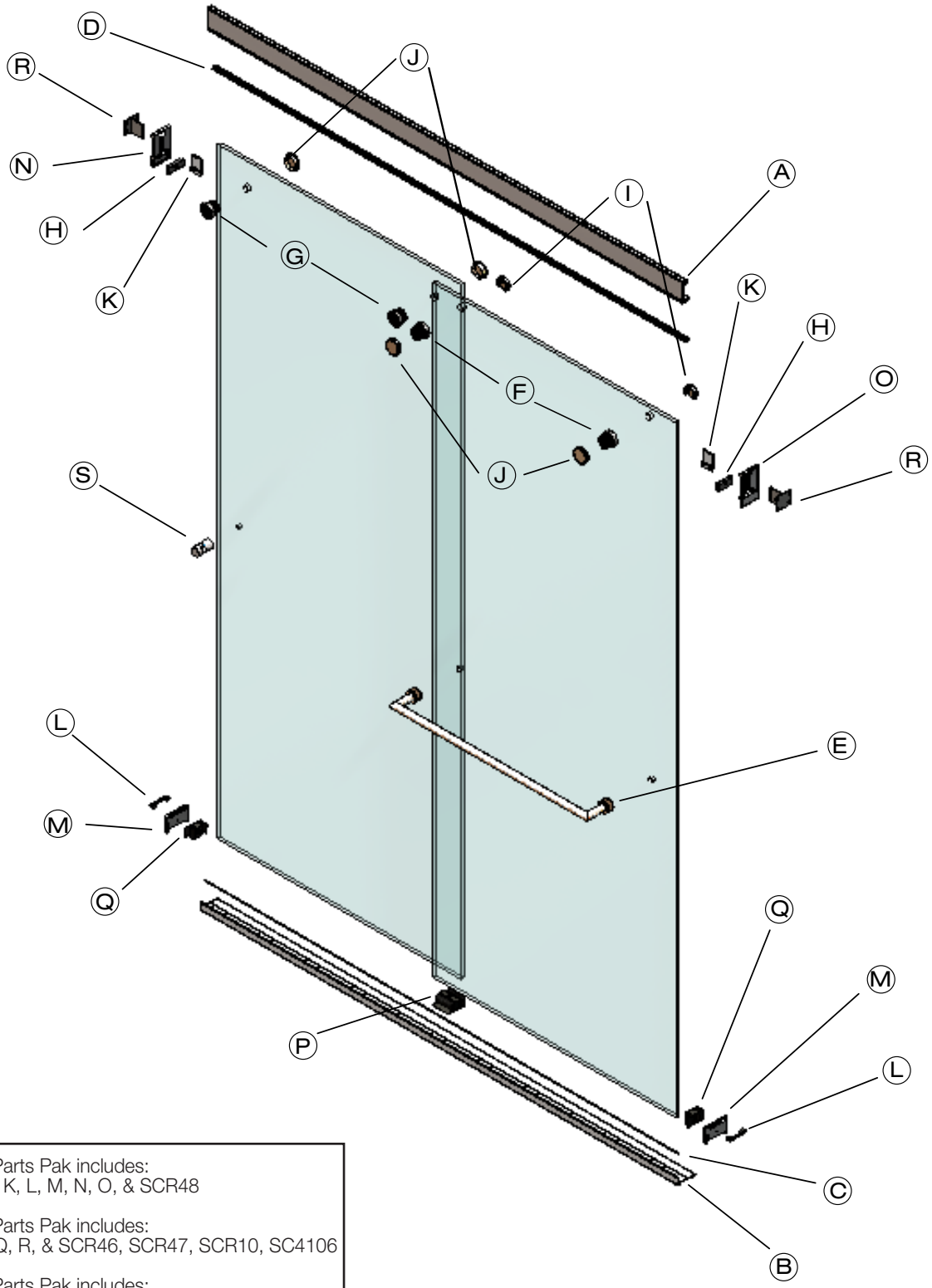

Notes

PPRTX01 Parts Pak includes:
Letters I, J, K, L, M, N, O, & SCR48

PPRTX03 Parts Pak includes:
F, G, H, P, Q, R, & SCR46, SCR47, SCR10, SC4106

PPRTX02 Parts Pak includes:
F, G, H, P, Q, R, & SCR46, SCR47, SCR10, SC4106, & SC5118

Filler for out of plumb conditions:

SCX891* for curb.

Bypass **Tub/Shower**

3/8” Semi-Frameless Rotolo Lux (RTXH-905)
1/4” Semi-Frameless Rotolo Lux (5550)

RTXH-905/5550 Parts Listing

Part Letter	Part Number	Description	Qty/Unit	Length/Each	Chrome *(SV)*	Brushed Nickel *(BN)*, Oil Rubbed Bronze *(OR)*	Matte Black *(WI)*
A	SCX923	Header	(1)	Cut to Size	172.73	195.67	201.77
B	SC927-60H-	Curb Track - 60”	(1)	Each	49.50	63.80(BN) 147.40(OR)	159.50
C	SCV190-67	Tub Track Insert		Each	4.57	-	-
D	LV09350060XBK00	Anti-Jump Rail	(1)	Each	7.39	-	-
E	LUXTS-018	18” Towel Bar Asmbly	(1)	Each	103.00	108.00(BN) 110.00(OR)	125.00
E	LUXTS-024	24” Towel Bar Asmbly	(1)	Each	116.00	119.00(BN) 125.00(OR)	138.00
F	SC4249T	Top Roller Assembly	(2)	Each	18.93	-	-
G	SC4249B	Bottom Roller Assembly	(2)	Each	16.79	-	-
H	SC4259	Bumper	(4)	Each	5.62	-	-
I	SC4251	Top Roller Back Cap	(2)	Each	3.40	4.23	5.29
J	SC4250	Roller Front Cap	(4)	Each	3.87	5.07	6.08
K	SC8964	Bracket Clip	(2)	Each	4.95	4.95	4.95
L	SC8962	Rubber Insert	(2)	Each	0.48	-	-
M	SC8961	Track Cover	(2)	Each	4.06	8.35	10.02
N	SC8965	Left Header Cover	(1)	Each	5.07	9.96	11.93
O	SC8966	Right Header Cover	(1)	Each	5.07	9.96	11.93
P	SC8956	Bottom Guide (3/8” glass)	(1)	Each	2.56	-	-
P	SC8955	Bottom Guide (1/4” glass)	(1)	Each	2.56	-	-
Q	SC8973	Wall Guide (3/8” glass)	(2)	Each	2.09	-	-
Q	SC8972	Wall Guide (1/4” glass)	(2)	Each	2.09	-	-
R	SC8963	Short Bracket	(2)	Each	4.95	-	-
S	ROLKD-000	Knob	(1)	Each	19.00	19.00(BN)	40.00(OR, WI)
#	SCR10	Wall Screw, #8 x 1$^1/_2$”	(10)	Each	0.43	-	-
#	SCR46	Wall Guide Screw, #8 x 2$^1/_2$”	(2)	Each	0.43	-	-
#	SCR47	#8 x 1$^1/_8$” Guide Screw	(1)	Each	0.43	-	-
#	SCR48	M4 x 8 Bracket Screw	(4)	Each	0.43	-	-
#	SC4106	Plastic Wall Anchor	(10)	Each	0.29	-	-
#	SC5118	M5-0.8 x 25 (1/4” glass)	(2)	Each	0.67	-	-
	LV03550098XCL00	3/8” Vinyl Seal	(2)	Each	9.30	-	-
	SCV911	1/4” Vinyl Seal	(2)	Each	37.22	-	-
	PPRTX01	Parts Pak #1	(1)	Each	43.00	72.00	83.00
	PPRTX03	Parts Pak #3 (3/8” glass)	(1)	Each	92.00	-	-
	PPRTX02	Parts Pak #2 (1/4” glass)	(1)	Each	92.00	-	-
	SCX891*	Curb Filler		Cut to Size	72.00	82.00	102.00

- Part not shown, but is included in one of the Parts Pack.

***Please specify taper if needed and add $45.00 (SCTAPERCHARGE)**

Inline Configurations

Bypass **Tub/Shower**

3/8” Semi-Frameless Rotolo Lux SLIM (RTXS-905)
1/4” Semi-Frameless Rotolo Lux SLIM (5650)

To insure correct fit when ordering cut to size parts, please indicate complete original unit number.

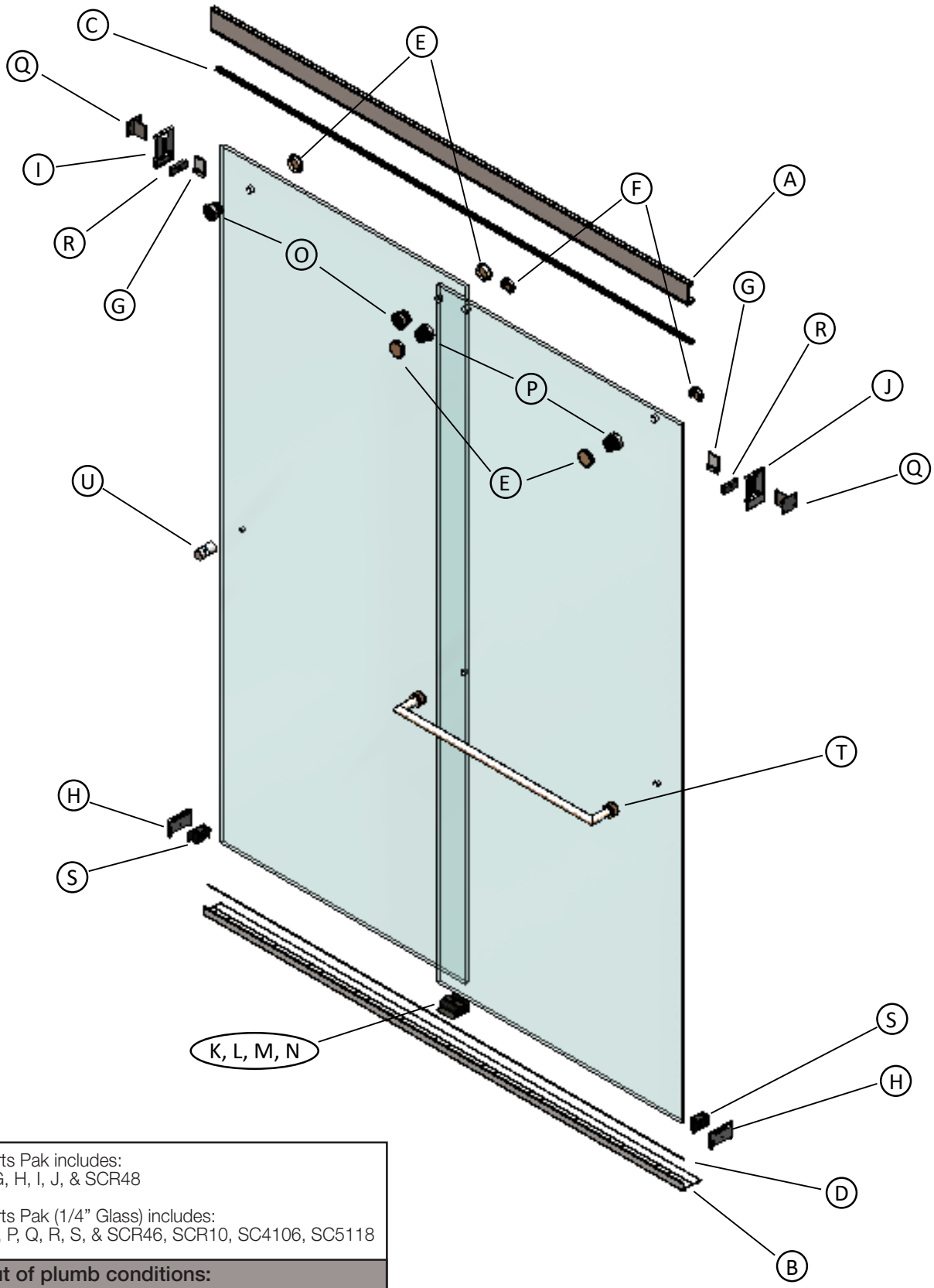

Notes

PPRTX04 Parts Pak includes: Letters E, F, G, H, I, J, & SCR48 PPRTX07 Parts Pak (1/4” Glass) includes: K, L, M, N, O, P, Q, R, S, & SCR46, SCR10, SC4106, SC5118
Filler for out of plumb conditions:
SCX891* for curb.

Bypass **Tub/Shower**

3/8” Semi-Frameless Rotolo Lux SLIM (RTXS-905)
1/4” Semi-Frameless Rotolo Lux SLIM (5650)

RTXS-905/5650 Parts Listing

Part Letter	Part Number	Description	Qty/Unit	Length/Each	Chrome *(SV)*	Brushed Nickel *(BN)*, Oil Rubbed Bronze *(OR)*	Matte Black *(WI)*
A	SCX923	Header	(1)	Cut to Size	172.73	195.67	201.77
B	SCX556	Tub Track *(does not include silencer SCV190-67)*	(1)	Cut to Size	65.40	73.87	91.23
C	LV09350060XBK00	Anti-Jump Rail	(1)	Each	7.39	-	-
D	SCV190-67	Tub Track Insert		Each	4.57	-	-
E	SC4250	Roller Front Cap	(4)	Each	3.87	5.07	6.08
F	SC4251	Top Roller Back Cap	(2)	Each	3.40	4.23	5.29
G	SC8964	Bracket Clip	(2)	Each	4.95	4.95	4.95
H	SC8967	Track Cover	(2)	Each	1.06	-	-
I	SC8965	Left Header Cover	(1)	Each	5.07	9.96	11.93
J	SC8966	Right Header Cover	(1)	Each	5.07	9.96	11.93
K	SC5600-T	Guide Top	(1)	Each	6.30	-	-
L	SC5600-B	Guide Bottom for 1/4” Glass	(1)	Each	6.45	-	-
L	SC5638-B	Guide Bottom for 3/8” Glass	(1)	Each	6.35	-	-
M	SC5600-R	Guide Ring for 1/4” Glass	(1)	Each	5.95	-	-
M	SC5638-R	Guide Ring for 3/8” Glass	(1)	Each	6.35	-	-
N	SCR5600	Guide Screw #8 X 7/8”	(1)	Each	0.43	-	-
O	SC4249T	Top Roller Assembly	(2)	Each	18.93	-	-
P	SC4249B	Bottom Roller Assembly	(2)	Each	16.79	-	-
Q	SC8963	Short Bracket	(2)	Each	4.95	-	-
R	SC4259	Bumper	(4)	Each	5.62	-	-
S	SC8972	Wall Guide for 1/4” Glass	(2)	Each	2.09	-	-
S	SC8973	Wall Guide for 3/8” Glass	(2)	Each	2.09	-	-
T	LUXTS-018	18” Towel Bar Asmbly	(1)	Each	103.00	108.00(BN) 110.00(OR)	125.00
T	LUXTS-024	24” Towel Bar Asmbly	(1)	Each	116.00	119.00(BN) 125.00(OR)	138.00
U	ROLKD-000	Knob	(1)	Each	19.00	19.00 (BN)	40.00 (OR, WI)
#	SCR10	Wall Screw, #8 x 1 1/2”	(10)	Each	0.43	-	-
#	SCR46	Wall Guide Screw, #8 x 2 1/2”	(2)	Each	0.43	-	-
#	SCR48	M4 x 8 Bracket Screw	(4)	Each	0.43	-	-
#	SC4106	Plastic Wall Anchor	(10)	Each	0.29	-	-
#	SC5118	M5-0.8 X 25 for 1/4” glass	(2)	Each	0.67	-	-
#	SCV911	Vinyl Seal for 1/4” Glass	(2)	Each	37.22	-	-
#	LV03550098XCL00	Vinyl Seal for 3/8” Glass	(2)	Each	9.30	-	-
	PPRTX04	Parts Pak #1	(1)	Each	33.00	55.00(BN) 60.00 (OR)	72.00
	PPRTX05	Parts Pak #2 - for 1/4” Glass	(1)	Each	89.00	-	-
	PPRTX06	Parts Pak #2 - for 3/8” Glass	(1)	Each	89.00	-	-
	SCX891*	Curb Filler		Cut to Size	72.00	82.00	102.00

- Part not shown, but is included in one of the two Parts Paks.

***Please specify taper if needed and add $45.00 (SCTAPERCHARGE)**

Inline Configurations

To insure correct fit when ordering cut to size parts, please indicate complete original unit number.

Bypass **Tub/Shower**

3/8" Semi-Frameless Rotolo (RTLH-905/RTLA-905)
1/4" Semi-Frameless Rotolo (5500)

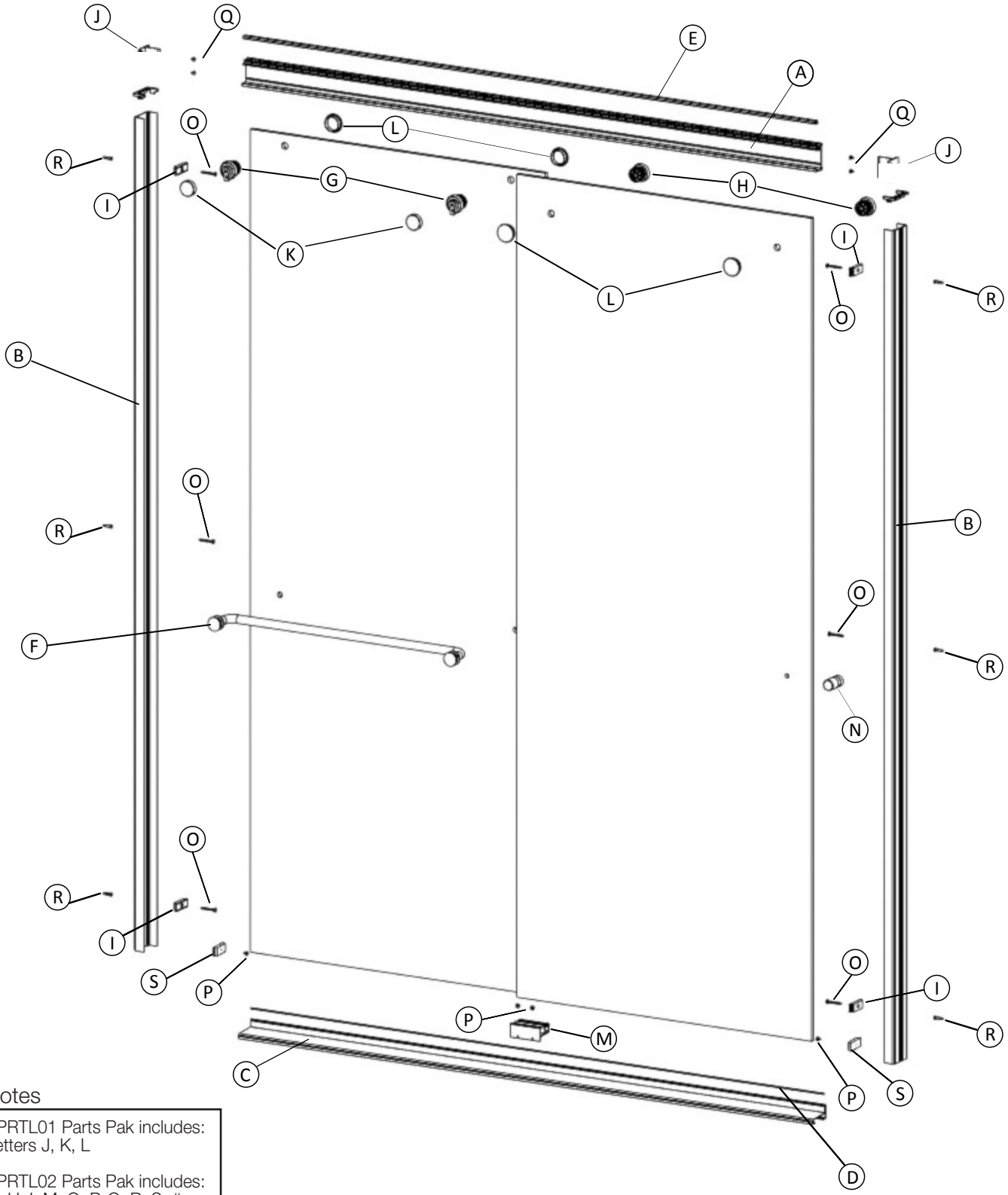

Notes

PPRTL01 Parts Pak includes:
Letters J, K, L

PPRTL02 Parts Pak includes:
G, H, I, M, O, P, Q, R, S, #

PPRTL03 Parts Pak includes:
G, H, I, M, O, P, Q, S, #

Filler for out of plumb conditions:
SCX891* for walls (vertical) or curb (horizontal)

Bypass **Tub/Shower**

3/8” Semi-Frameless Rotolo (RTLH-905/RLTH-905)
1/4” Semi-Frameless Rotolo (5500)

RTLH-905/RTLA-905/5500 Parts Listing

Part Letter	Part Number	Description	Qty/Unit	Length/Each	Chrome *(SV)*	Brushed Nickel *(BN)*, Oil Rubbed Bronze *(OR)*	Matte Black *(WI)* Brushed Gold *(BG)*
A	SCX923	Header	(1)	Cut to Size	172.73	195.67	201.77
B	SCX926	Wall Jamb	(2)	Cut to Size	108.26	128.38	137.30
C	SCX931	Curb Track	(1)	Cut to Size	88.60	139.44	155.94
D	SCV190-67	Tub Track Insert		Each	4.57	-	-
E	LV09350060XBK00	Anti-Jump Rail	(1)	Each	7.39	-	-
F	CELTS-012	12” Towel Bar Asmbly - f/40” unit	(2)	Each	48.00	51.00 (BN) 70.00 (OR)	70.00 (WI) 112.00 (Others)
F	CELTS-018	18” Towel Bar Asmbly - f/>56” unit	(2)	Each	54.00	57.00 (BN) 76.00 (OR)	76.00 (WI) 137.00 (Others)
F	CELTS-024	24” Towel Bar Asmbly - f/>72” unit	(2)	Each	60.00	63.00 (BN) 82.00 (OR)	82.00 (WI) 142.00 (Others)
G	SC4249T	Top Roller Assembly	(2)	Each	18.93	-	-
H	SC4249B	Bottom Roller Assembly	(2)	Each	16.79	-	-
I	SC4259	Bumper	(4)	Each	5.62	-	-
J	SC4253	Wall Mount Bracket	(2)	Each	7.37	-	-
K	SC4251	Top Roller Back Cap	(2)	Each	3.40	4.23	5.29
L	SC4250	Roller Front Cap	(4)	Each	3.87	5.07	6.08
M	SC8953	Bottom Guide for 1/4” Glass	(1)	Each	3.15	-	-
M	SC8954	Bottom Guide for 3/8” Glass	(1)	Each	3.15	-	-
N	ROLKD-000	Knob	(1)	Each	19.00	19.00 (BN)	40.00 (OR, WI, BG)
O	SCR10	Wall Jamb Screw, #8 x 1½”	(10)	Each	0.43	-	-
P	SCR30	Guide Screw, #8 x 2”	(4)	Each	0.43	-	-
Q	SCR02	#8 x ¼” Truss Head Screw, SS	(6)	Each	0.43	-	-
R	SC4106	Plastic Wall Anchor	(10)	Each	0.29	-	-
S	SCV960	Hold Down	(2)	Each	4.02	-	-
#	SC5116	Allen Wrench - 2.5mm	(1)	Each	2.75	-	-
#	SC5118	M5-0.8 x 25	(2)	Each	0.67	-	-
	PPRTL01	Rotolo Roller Caps	(1)	Each	59.40	77.00	91.30
	PPRTL02	Rotolo Parts Pak - 1/4” Glass	(1)	Each	79.20	-	-
	PPRTL03	Rotolo Parts Pak - 3/8” Glass	(1)	Each	79.20	-	-
	SCX891*	Wall/Curb Filler		Cut to Size	72.00	82.00	102.00

- Part not shown, but is included in Parts Pack. These parts will not be used in all instances.

***Please specify taper if needed and add $45.00 (SCTAPERCHARGE)**

Inline Configurations

To insure correct fit when ordering cut to size parts, please indicate complete original unit number.

Bypass **Tub/Shower**

3/8” Semi-Frameless Rotolo SLIM (RTLS-905)
1/4” Semi-Frameless Rotolo SLIM (5600)

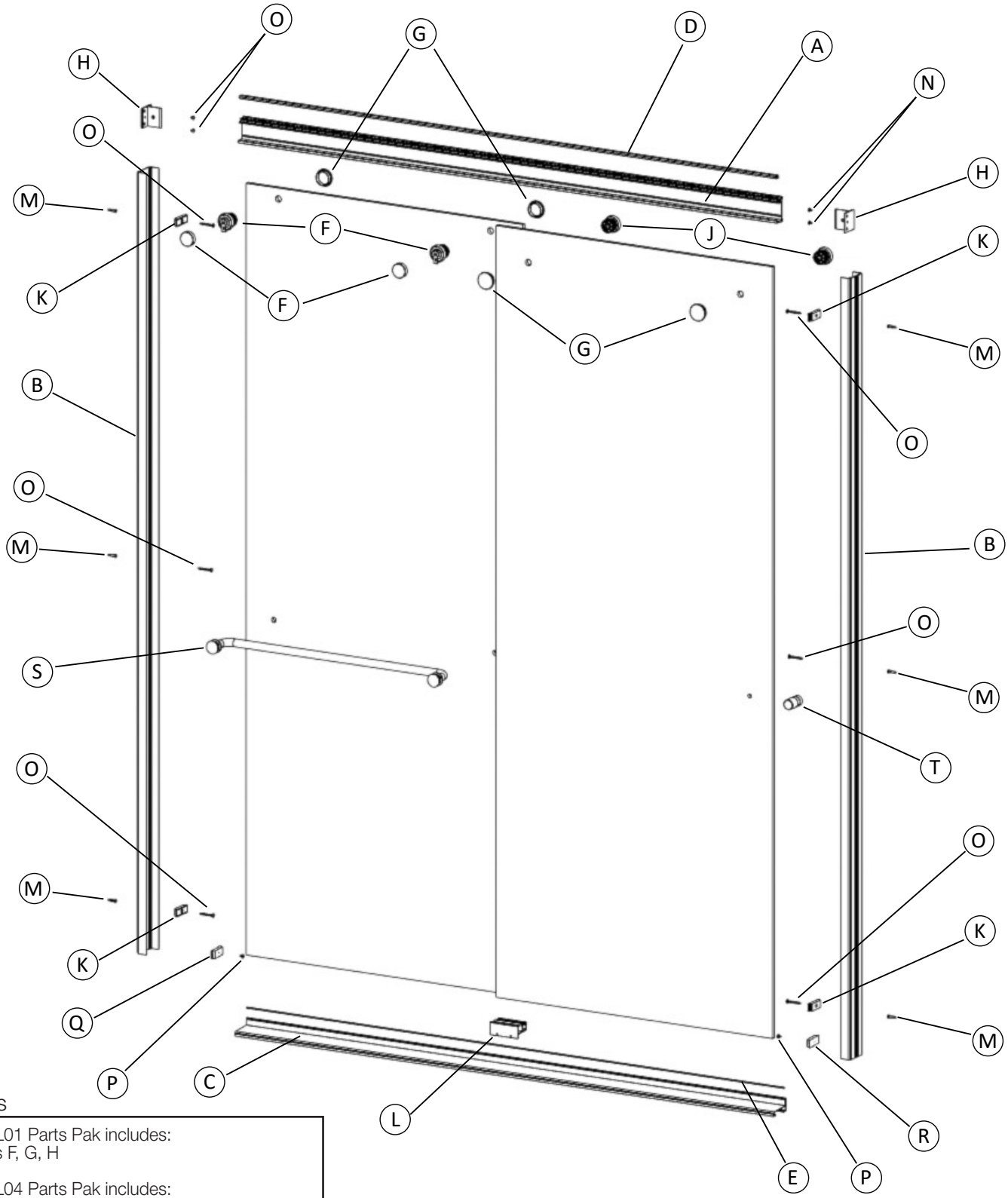

Notes

PPRTL01 Parts Pak includes: Letters F, G, H PPRTL04 Parts Pak includes: I, J, K, L1-L4, M, No, O, P, Q, R, #
Filler for out of plumb conditions:
SCX891* for walls (vertical) or curb (horizontal)

RTLS-905 / 5600 Parts Listing

Part Letter	Part Number	Description	Qty/Unit	Length/Each	Chrome *(SV)*	Brushed Nickel *(BN)*, Oil Rubbed Bronze *(OR)*	Matte Black *(WI)* Brushed Gold *(BG)*
A	SCX923	Header	(1)	Cut to Size	172.73	195.67	201.77
B	SCX926	Wall Jamb	(2)	Cut to Size	108.26	128.38	137.30
C	SCX556	Tub Track *(does not include silencer SCV190-67)*	(1)	Cut to Size	65.40	73.87	91.23
D	LV09350060XBK00	Anti-Jump Rail	(1)	Each	7.39	-	-
E	SCV190-60	Tub Track Insert		Each	4.57	-	-
F	SC4251	Top Roller Back Cap	(2)	Each	3.40	4.23	5.29
G	SC4250	Roller Front Cap	(4)	Each	3.87	5.07	6.08
H	SC4253	Wall Mount Bracket	(2)	Each	7.37	-	-
I	SC4249T	Top Roller Assembly	(2)	Each	18.93	-	-
J	SC4249B	Bottom Roller Assembly	(2)	Each	16.79	-	-
K	SC4259	Bumper	(4)	Each	5.62	-	-
L1	SC5600-T	Guide Top for 1/4” glass	(1)	Each	6.30	-	-
L2	SC5600-B	Guide Bottom for 1/4” glass	(1)	Each	6.45	-	-
L3	SC5600-R	Guide Ring for 1/4” glass	(1)	Each	5.95	-	-
L4	SCR5600	Guide Screw #8 X 7/8”	(1)	Each	0.43	-	-
L5	SC5601	Guilde Bottom for 3/8” glass	(1)	Each	6.30	-	-
L6	SC5602	Guide Top for 3/8” glass	(1)	Each	6.30	-	-
L7	SC5603	Guide Spacer for 3/8” glass	(1)	Each	5.95	-	-
M	SC4106	Plastic Wall Anchor	(10)	Each	0.29	-	-
N	SCR02	#8 x 1/4” Truss Head Screw, SS	(6)	Each	0.43	-	-
O	SCR10	Wall Jamb Screw, #8 x 1 1/2”	(10)	Each	0.43	-	-
P	SCR30	Guide Screw, #8 x 2”	(4)	Each	0.43	-	-
Q	SCV963	Hold Down - Left Side	(2)	Each	4.22	-	-
R	SCV964	Hold Down - Right Side	(2)	Each	4.22	-	-
S	CELTS-012	12” Towel Bar Asmbly - f/40” unit	(2)	Each	48.00	51.00 (BN) 70.00 (OR)	70.00 (WI) 112.00 (BG)
S	CELTS-018	18” Towel Bar Asmbly - f/>56” unit	(2)	Each	54.00	57.00 (BN) 76.00 (OR)	76.00 (WI) 137.00 (BG)
S	CELTS-024	24” Towel Bar Asmbly - f/>72” unit	(2)	Each	60.00	63.00 (BN) 82.00 (OR)	82.00 (WI) 142.00 (BG)
T	ROLKD-000	Knob	(1)	Each	19.00	19.00 (BN)	40.00 (OR, WI, BG)
#	SC5116	Allen Wrench - 2.5mm	(1)	Each	2.75	-	-
#	SC5118	M5-0.8 X 25 for 1/4” glass	(2)	Each	0.67	-	-
	PPRTL01	Rotolo Roller Caps	(1)	Each	59.40	77.00	91.30
	PPRTL04	Rotolo Slim Parts Pak - 1/4” glass	(1)	Each	85.00	-	-
	PPRTL05	Rotolo Slim Parts Pak - 3/8” glass	(1)	Each	85.00	-	-
	SCX891*	Wall/Curb Filler		Cut to Size	72.00	82.00	102.00

- Part not shown, but is included in Parts Pack. These parts will not be used in all instances.

***Please specify taper if needed and add $45.00 (SCTAPERCHARGE)**

Inline Configurations

Bypass **Tub/Shower**

1/4" Semi-Frameless Infinity (4400/4500)

To insure correct fit when ordering cut to size parts, please indicate complete original unit number.

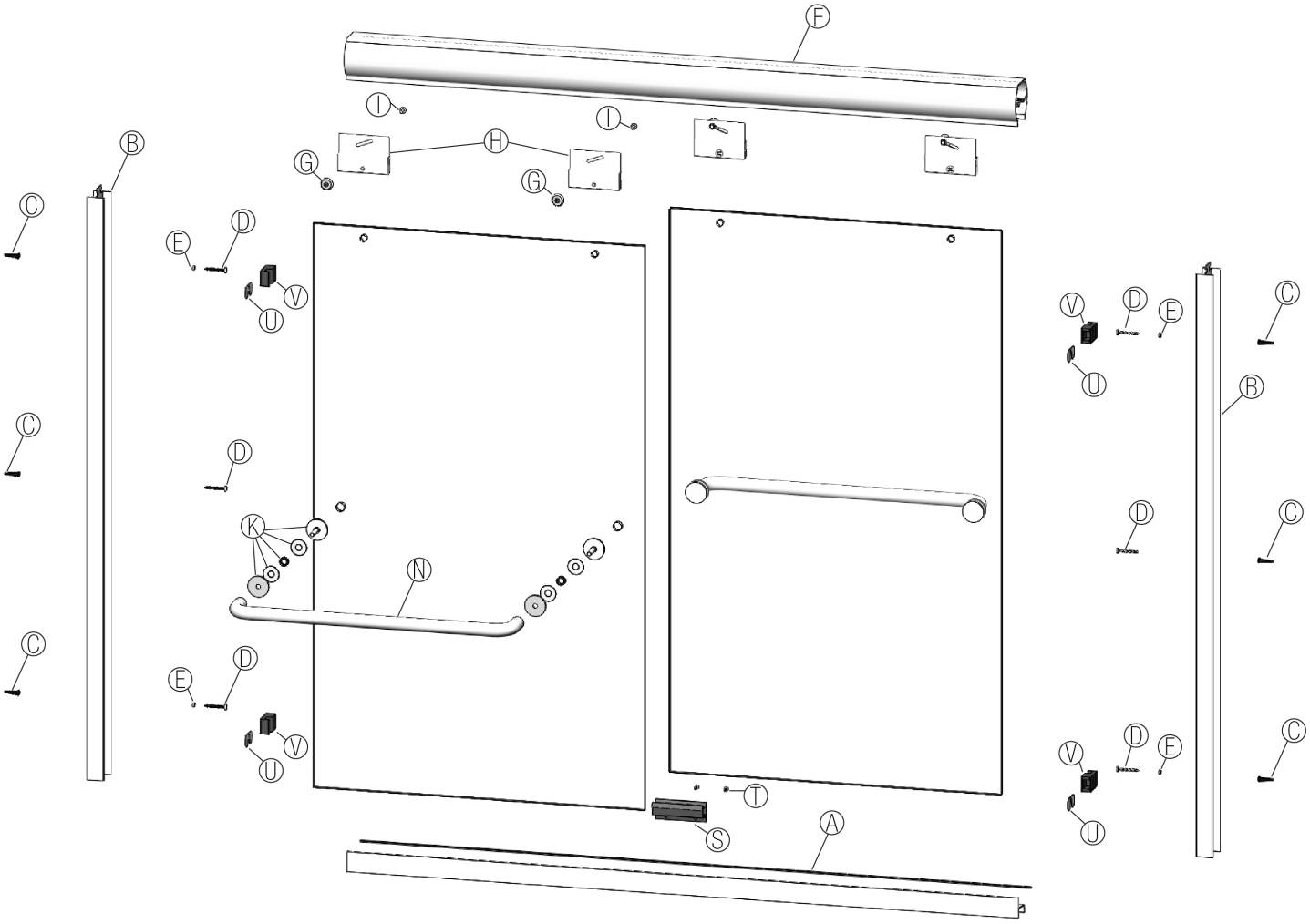

Notes

PPINF51 Parts Pak Includes: Letters C, D, E, G, S, T, U, V
Fillers for out of plumb conditions:
SC907* for tub/shower (horizontal). SC850* for walls (vertical).

4400/4500 Parts Listing

Part Letter	Part Number	Description	Qty/Unit	Length/Each	Chrome *(SV)*	Brushed Nickel *(BN)*, Oil Rubbed Bronze *(OR)*	All other finishes *(see below)*
A	SCX556	Tub Track *(does not include silencer SCV190-67)*	(1)	Cut to Size	65.40	73.87	91.23
B	SCX896	Wall Jamb	(2)	Cut to Size	72.77	81.24	98.60
C	SC4106	Plastic Wall Anchor	(6)	Each	0.29	-	-
D	SCR10	#8 x 1 1/2" Truss Head Screw	(6)	Each	0.43	0.43	-
E	SC4012	Nylon Spacer	(4)	Each	0.43	-	-
F	SCX614	Header	(1)	Cut to Size	204.53	213.00	230.36
	SC8240A	Hanger Bracket Assembly (*Includes SC8240, SC4082, SCR44)*	(4)	Each	Purchase each individual part		
G	SC4082	Roller	(4)	Each	1.54	-	-
H	SC8240	Hanger Bracket	(4)	Each	13.00 (SV/BN)	17.00 (All others)	18.00 (BB/BG)
I	SCR44	#8 x 3/8" Hex Head Roller Screw	(4)	Each	0.43	-	-
K	BSFW	T-bar fastner with front/back plates	(4)	Each	17.02	20.43	29.41
N	CELTS-012	12" Towel Bar Asmbly - f/40" unit	(2)	Each	48.00	51.00 (BN) 70.00 (OR)	70.00 (WI) 112.00 (Others)
N	CELTS-018	18" Towel Bar Asmbly - f/>56" unit	(2)	Each	54.00	57.00 (BN) 76.00 (OR)	76.00 (WI) 137.00 (Others)
N	CELTS-024	24" Towel Bar Asmbly - f/>72" unit	(2)	Each	60.00	63.00 (BN) 82.00 (OR)	82.00 (WI) 142.00 (Others)
N	INFTS-018	18" Towel Bar Asmbly - f/>56" unit	(2)	Each	-	-	112.00 (BB)
N	INFTS-018	18" Towel Bar Asmbly - f/>56" unit	(2)	Each	-	-	137.00 (BB)
N	INFTS-024	24" Towel Bar Asmbly - f/>72" unit	(2)	Each	-	-	142.00 (BB)
S	SC4049	Nylon Bottom Guide	(1)	Each	3.28	-	-
T	SCR11	#6 x 3/8" Pan Head Screw	(2)	Each	0.43	-	-
U	SC4011	Stainless Bumper Insert	(4)	Each	2.67	-	-
V	SC4020	Soft Jamb Bumper	(4)	Each	2.20	-	-
	BAS-NP	Basco Name Plate	(1)	Each	1.10	-	-
	SC5115	Allen Wrench (5/64") *(not pictured)*	(1)	Each	0.67	-	-
	PPINF51	Parts Pak for 4400 or 4500		Each	35.04	-	-
	SC4570**	8" H-T-H Handle Assembly for CD (Solid Color)	(2)	Each	66.00	65.00 (BN) 93.00 (OR/WI)	104.00
	SC4501	Finger Pull for Handle	(2)	Each	27.69	-	-
	SC1011	Clear Plastic Discs for Handle	(8)	Each	2.26	-	-
	SC1101	Handle Cap Screw	(2)	Each	12.19	-	-
	SCV190-67	Silencer/Insert	(1)	Each	4.57	-	-
	SC4340-38	Anti-Jump Clip	(1)	Set of 3	24.26	-	-
	SCX907*	Tub/Curb Filler		Cut to Size	72.00	82.00	102.00
	SCX850*	Wall Filler		Cut to Size	71.00	81.00	101.00

***Please specify taper if needed and add $45.00 (SCTAPERCHARGE).**

**** Reflects Hole-to-Hole dimension**

Finish Selections (Code)

Chrome (SV)	Brushed Nickel (BN), Oil Rubbed Bronze (OR)	Bronze (BR), Brushed Bronze (BB), Brushed Gold (BG) Satin Nickel (SN), White (WP), Matte Black (WI)

Inline Configurations

Bypass **Tub/Shower**

Semi-Frameless Classic (3505)

To insure correct fit when ordering cut to size parts, please indicate complete original unit number.

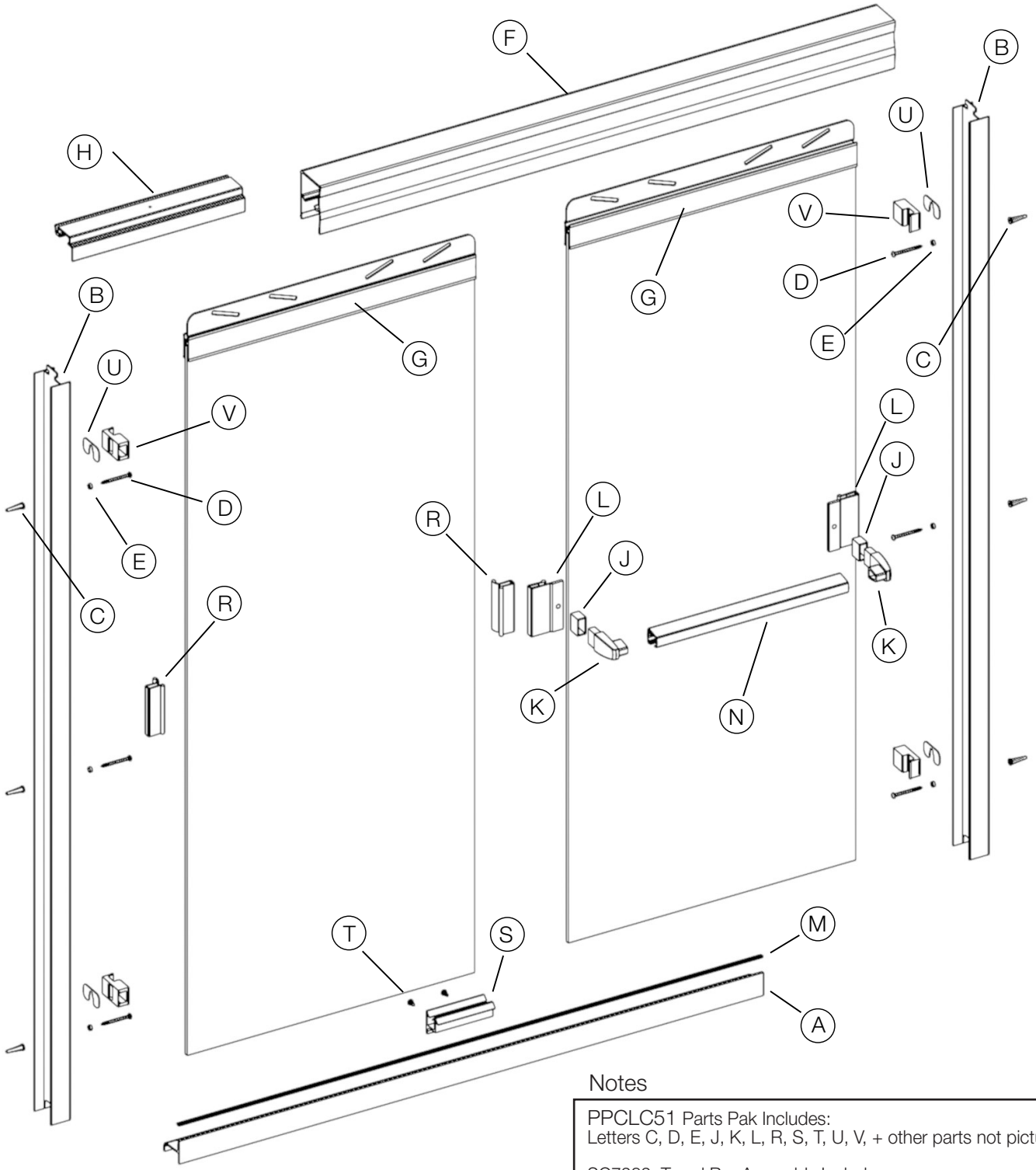

Notes

PPCLC51 Parts Pak Includes:
Letters C, D, E, J, K, L, R, S, T, U, V, + other parts not pictured

SC7282 Towel Bar Assembly Includes:
Letters (2 ea - J, K, L, P, SCR20), (1 ea - N)

3505 models are provided with one towel bar assembly as shown. Please specify complete unit number when purchasing an additional assembly.

Fillers for out of plumb conditions:

SC907* for tub/shower (horizontal).
SC850* for walls (vertical).

3505 Parts Listing

Part Letter	Part Number	Description	Qty/Unit	Length/Each	Chrome *(SV)*	Brushed Nickel *(BN)*, Oil Rubbed Bronze *(OR)*
A	SCX556	Tub Track *(does not include silencer SCV191-60)*	(1)	Cut to Size	65.40	73.87
B	SCX896	Wall Jamb	(2)	Cut to Size	72.77	81.24
C	SC4106	Plastic Wall Anchor	(6)	Each	0.29	-
D	SCR10	#8 x 1½" Truss Head Screw	(6)	Each	0.43	0.43
E	SC4012	Nylon Spacer	(4)	Each	0.43	-
F	SCX917	Header	(1)	Cut to Size	194.29	226.50
G	SCX882**	Top Rail (& SCV52 Glazing Vinyl)	(2)	Each	See note below	
H	SC4340-35	Anti-Jump Clip	(1)	Set of 3	15.02	-
J	SC4130	Towel Bar Trim Ring	(2)	Each	1.69	2.37
K	SC4125	Acrylic Towel Bar Bracket	(2)	Each	4.40	-
L	SC128	Towel Bar Base	(2)	Each	4.50	5.73
M	SCV191-60	Tub Track Insert (60" length)	(1)	Each	8.42	-
N	SCX805	Towel Bar	(1)	Cut to Size	38.16	49.04
R	SC4129	Pull Handle	(2)	Each	4.00	6.72
S	SC4049	Nylon Bottom Guide	(1)	Each	3.28	-
T	SCR11	#6 x ⅜" Pan Head Screw	(5)	Each	0.43	0.43
U	SC4011	Stainless Bumper Insert	(4)	Each	2.67	-
V	SC4020	Soft Jamb Bumper	(4)	Each	2.20	-
+	BAS-NP	Basco Name Plate	(1)	Each	1.10	-
+	SCR44	8 x ⅜" Hex Head Roller Screw	(4)	Each	0.43	-
+	SC4082	Roller	(4)	Each	1.54	-
+	SCR20	#10 x ½" Flat Head Screw	(2)	Each	0.43	-
+	SCV294	Vinyl Shim	(4)	Each	4.02	-
	PPCLC51	Parts Pak for 3505		Each	49.01	55.80
	SC7282	Towel Bar Assembly		Each	61.72	72.72
	SCX907*	Tub/Curb Filler		Cut to Size	72.00	82.00
	SCX850*	Wall Filler		Cut to Size	71.00	81.00

***Please specify taper if needed and add $45.00 (SCTAPERCHARGE).**
****Only sold attached to glass. Contact Customer Service for complete panel pricing.**
+ Not pictured

Finish Selections (Code)

Chrome (SV)	Brushed Nickel (BN), Oil Rubbed Bronze (OR)

Inline Configurations

Bypass **Tub/Shower**

Framed Deluxe (6150/7150)

To insure correct fit when ordering cut to size parts, please indicate complete original unit number.

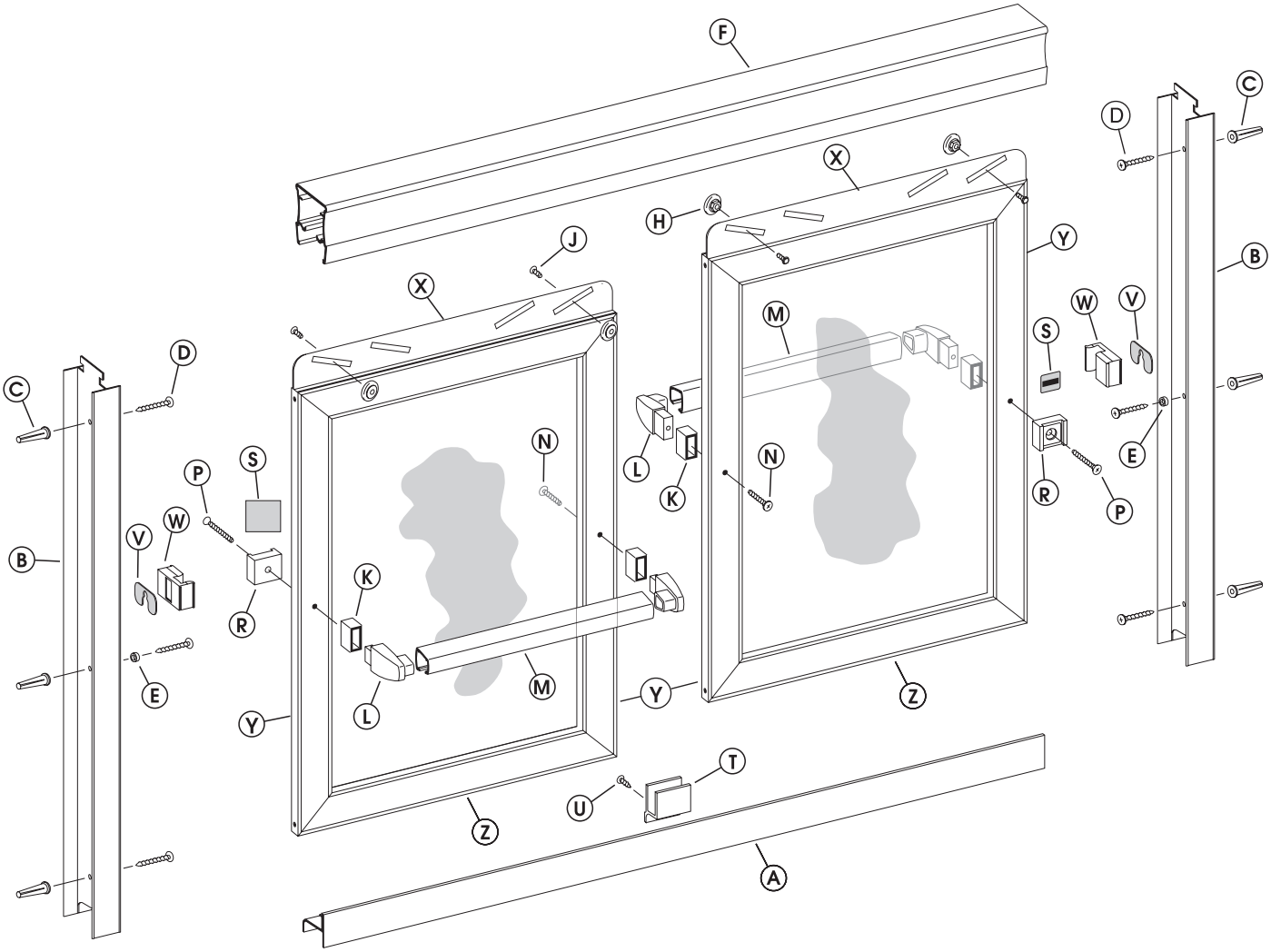

Notes

PPDLX51 Parts Pak Includes: Letters C, D, E, H, J, K, L, N, P, R, S, T, U, V, W SC7277 Towel Bar Assembly Includes: Letters (2 ea - K, L, N, P) & (1 ea - M, R, S)
Fillers for out of plumb conditions:
SC907* for tub/shower (horizontal). SC850* for walls (vertical).

6150/7150 Parts Listing

Part Letter	Part Number	Description	Qty/Unit	Length/Each	Chrome *(SV)*	Brushed Nickel *(BN)*, Oil Rubbed Bronze *(OR)*	All other finishes *(see below)*
A	SCX556	Tub Track *(does not include silencer SCV190-67)*	(1)	Cut to Size	65.40	73.87	$91.23
	SCV190-67	Tub Track Insert/Silencer		Each	4.57	-	-
B	SCX896	Wall Jamb	(2)	Cut to Size	72.77	81.24	98.60
C	SC4106	Plastic Wall Anchor	(6)	Each	0.29	-	-
D	SCR10	#8 x 1½" Truss Head Screw	(6)	Each	0.43	0.43	-
E	SC4012	Nylon Spacer	(2)	Each	0.43	-	-
F	SCX881	Header	(1)	Cut to Size	163.27	171.74	205.89
H	SC4082	Roller	(4)	Each	1.54	-	-
J	SCR44	#8 x ⅜" Hex Head Roller Screw	(4)	Each	0.43	-	-
K	SC4130	Trim Ring	(4)	Each	1.69	2.37	2.61
L	SC4125	Acrylic Towel Bar Bracket	(4)	Each	4.40	-	-
M	SCX805	Towel Bar	(2)	Cut to Size	38.16	49.04	53.95
N	SCR07	#10 x ⅞" Truss Head Screw	(2)	Each	0.43	0.43	-
P	SCR08	#10 x 1⅛" Flat Head Screw	(2)	Each	0.43	-	-
R	SC4110	Acrylic Finger Pull	(2)	Each	2.28	-	-
S	SC4532	Basco Decal	(2)	Each	1.08	-	-
T	SC8950-3"	Nylon Bottom Guide	(1)	Each	0.90	-	-
U	SCR11	#6 x ⅜" Pan Head Screw	(1)	Each	0.43	0.43	-
V	SC4011	Stainless Bumper Insert	(2)	Each	2.67	-	-
W	SC4020	Soft Jamb Bumper	(2)	Each	2.20	-	-
X	SCX882	Top Rail	(2)	Cut to Size	74.37	82.84	100.20
Y	SCX884	Side Rail	(4)	Cut to Size	86.50	94.97	112.34
Z	SCX883	Bottom Rail	(2)	Cut to Size	45.69	59.98	65.99
	PPDLX51	Parts Pak for 6150 or 7150		Each	54.47	58.00	72.07
	SC7277	Deluxe Towel Bar Assembly		Each	55.97	67.10	73.81
	SCX907*	Tub/Curb Filler		Cut to Size	72.00	82.00	102.00
	SCX850*	Wall Filler		Cut to Size	71.00	81.00	101.00

***Please specify taper if needed and add $45.00 (SCTAPERCHARGE).**

To insure correct fit when ordering cut to size parts, please indicate complete original unit number.

Finish Selections (Code)

Chrome (SV)	Brushed Nickel (BN), Oil Rubbed Bronze (OR)	Bronze (BR), Satin Nickel (SN), White (WP), Matte Black (WI)

Inline Configurations

Single Swing

1/4” Semi-Frameless Infinity (1400)

To insure correct fit when ordering cut to size parts, please indicate complete original unit number.

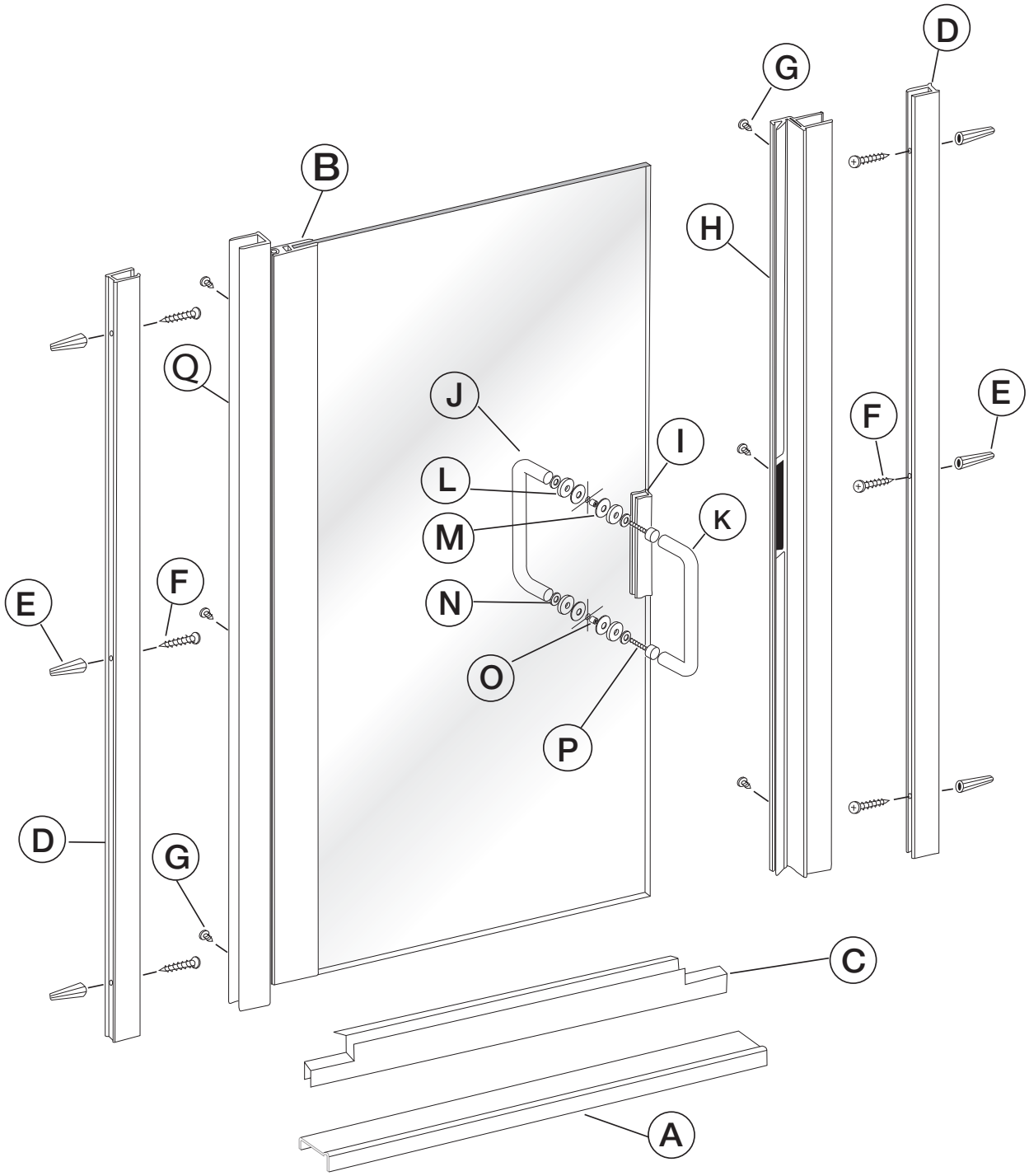

Notes

Fillers for out of plumb conditions:
SC553* for walls (vertical). SC878* for threshold (horizontal).

1400 Parts Listing

Part Letter	Part Number	Description	Qty/Unit	Length/Each	Chrome *(SV)*	Brushed Nickel *(BN)*, Oil Rubbed Bronze *(OR)*	All other finishes *(see below)*
A	SCX607	Curb	(1)	Cut to Size	50.82	59.29	76.66
B	SCX651	Hinge Rail	(1)	Cut to Size	73.68	85.63	115.52
C	SCV451-38	Clear Bottom Sweep	(1)	Cut to Size	4.52	-	-
D	SCX508	Wall Jamb	(2)	Cut to Size	53.24	69.17	82.11
E	SC4106	Plastic Wall Anchor	(6)	Each	0.29	-	-
F	SCR10	#8 x 1 1/2” Truss Head Screw	(6)	Each	0.43	0.43	-
G	SCR24	#6 x 3/8” Self Tapping Screw	(6)	Each	0.43	0.43	-
H	SCX1452	Strike Jamb w/ Magnet & Vinyl	(1)	Cut to Size	100.00	125.00	200.00
I	SC69570	3” Latch with Vinyl (SCV294)	(1)	Each	39.60	47.30	55.00
J-P	CELPD-006	Handle Assembly	(1)	Each	56.00	58.00 (BN) 73.00 (OR)	78.00 108.00 (BG)
Q	SCX649	Hinge Jamb	(1)	Cut to Size	72.24	83.13	98.07
	PPINF01	Parts Pak for 1400		Each	38.02	49.02	53.52
	SCX553*	1/2” Wall Filler		Cut to Size	43.00	53.00	72.00
	SCX891*	Curb Filler		Cut to Size	72.00	82.00	102.00
	SCV308	Glazing Vinyl f/ 1/4” Glass (F/Pt. B)		Per Ft.	1.12	-	-
	SCV314-84	Strike Jamb Vinyl (w/Pt. H)		Each	6.00	-	-
	SC4030	Magnet for Strike Jamb		Each	19.99	-	-
	SC4643	Mount Bushings *(f/ parts B & Q)*	(2)	Each	2.93	-	-
	SC4642	Hinge Bushings *(f/ parts B & Q)*	(2)	Each	6.53	-	-
	SC4644	Spacer Sleeve *(f/ parts B & Q)*	(1)	Each	5.34	-	-
	SCR5018	Screws f/ Mount Bushings *(f/ parts B & Q)*	(2)	Each	0.44	-	-

***Please specify taper if needed and add $45.00 (SCTAPERCHARGE).**

**** 6” Hole-to-Hole Handle dimension.**

Finish Selections (Code)

Chrome (SV)	Brushed Nickel (BN), Oil Rubbed Bronze (OR)	Bronze (BR), Brushed Bronze (BB), Brushed Gold (BG) Satin Nickel (SN), White (WP), Matte Black (WI)

Inline Configurations

Single Swing

Framed Deluxe (100)

Model # 110/210/510 prior to Jan. 2018

Please refer to pages 72-73 for Legacy pivot hinge model.

To insure correct fit when ordering cut to size parts, please indicate complete original unit number.

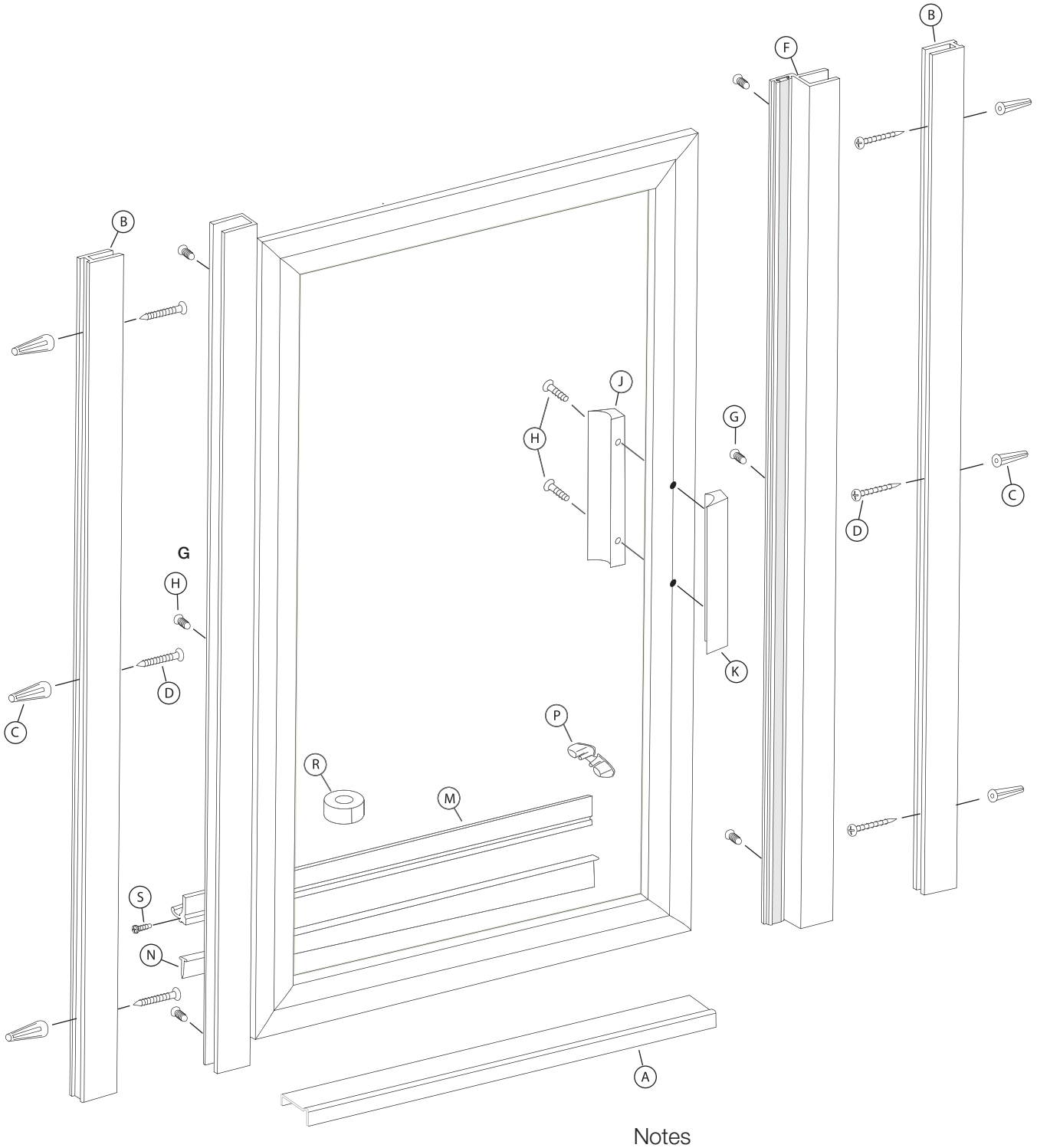

Notes

PPDLX01 Parts Pak Includes: Letters C, D, G, H, J, K, P, R, S
Fillers for out of plumb conditions:
SC878* for tub/shower (horizontal). SC553* for walls (vertical).

100 Continuous Hinge Parts Listing

Part Letter	Part Number	Description	Qty/Unit	Length/Each	Chrome *(SV)*	Brushed Nickel *(BN)*, Oil Rubbed Bronze *(OR)*	All other finishes *(see below)*
A	SCX607	Curb	(1)	Cut to Size	50.82	59.29	76.66
B	SCX508	Wall Jamb	(2)	Cut to Size	53.24	69.16	82.11
C	SC4106	Plastic Wall Anchor	(6)	Each	0.29	-	-
D	SCR10	#8 x 1½" Truss Head Screw	(6)	Each	0.43	0.43	-
F	SCX522	Strike Jamb with Magnet	(1)	Cut to Size	73.50	95.24	124.05
G	SCR30	#8-18 x ⅜" Truss Head Self Tap Screw	(6)	Each	0.43	0.43	-
H	SCR06	#6 x 1¼" Flat Head Screw	(2)	Each	0.43	0.43	-
J K	SC3317**	5" Exterior & Interior Handle	(1 Set)	Each	24.86	39.18	46.27
M	SCX589	Drip Rail	(1)	Cut to Size	33.73	40.03	44.03
N	SCV284	Tapered Drip Vinyl (37" pc.)	(1)	Each	3.51	-	-
P	SC4000	Drip Plugs	(2)	Each	0.47	-	-
R	SC4248	Two Faced Tape	(1)	Each	3.89	-	-
S	SCR11	#6 x ⅜" Truss Head Screw	(1)	Each	0.43	-	-
	PPDLX01	Parts Pak for 100		Each	32.07	41.71	52.51
	SCX891*	Curb Filler		Cut to Size	72.00	82.00	102.00
	SCX553*	½" Wall Filler		Cut to Size	43.00	53.00	72.00

***Please specify taper if needed and add $45.00 (SCTAPERCHARGE).**
**** 3½" Hole-to-Hole handle dimension.**

Finish Selections (Code)

Chrome (SV)	Brushed Nickel (BN), Oil Rubbed Bronze (OR)	Bronze (BR), Satin Nickel (SN), White (WP), Matte Black (WI)

Inline Configurations

Steam Door

Framed Deluxe (18CS)

To insure correct fit when ordering cut to size parts, please indicate complete original unit number.

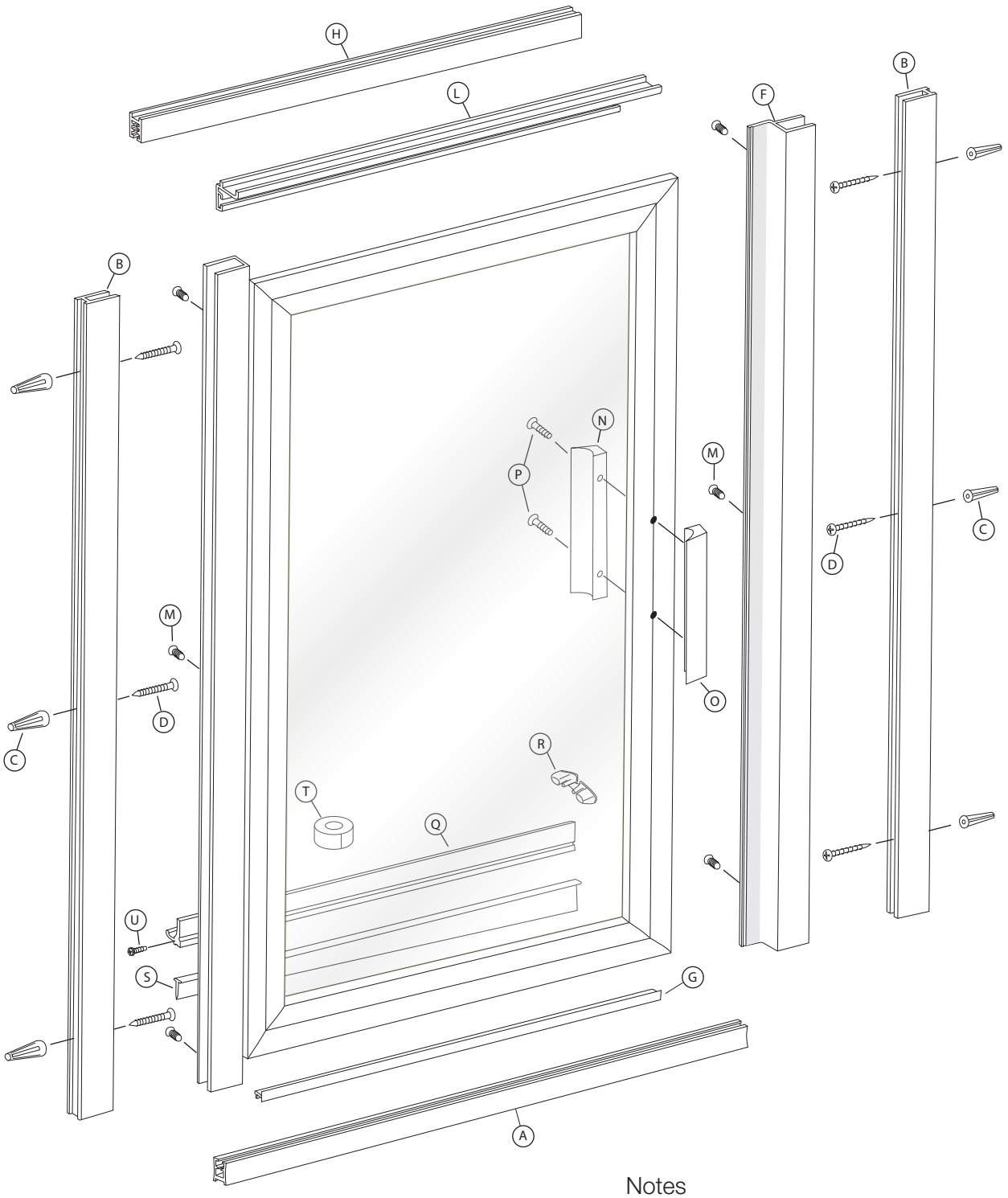

Notes

PPDLX01 Parts Pak Includes: Letters C, D, M, N, O, P, R, T, U
Fillers for out of plumb conditions:
SC543* for tub/shower (horizontal). SC553* for walls (vertical).

18CS Parts Listing

Part Letter	Part Number	Description	Qty/Unit	Length/Each	Chrome	Brushed Nickel *(BN)*, Oil Rubbed Bronze *(OR)*	All other finishes *(see below)*
A	SCX505B	Curb	(1)	Cut to Size	64.35	72.91	90.18
B	SCX508	Wall Jamb	(2)	Cut to Size	53.24	69.16	82.11
C	SC4106	Plastic Wall Anchor	(6)	Each	0.29	-	-
D	SCR10	#8 x 1 1/2" Truss Head Screw	(6)	Each	0.43	0.43	-
F	SCX522	Strike Jamb w/SCV253 Magnet	(1)	Cut to Size	73.50	95.24	124.05
G	SCX506	Curb Filler (No Holes)	(1)	Cut to Size	34.79	41.39	45.53
H	SCX505	Header	(1)	Cut to Size	57.35	67.13	85.60
L	SCX509	Snap-n Fill w/ Vinyl (SCV266)	(1)	Cut to Size	32.69	51.28	64.70
M	SCR02	#8-32 x 1/4" Truss Head Screw	(6)	Each	0.43	0.43	-
N O	SC3317**	5" Exterior & Interior Handle	(1 Set)	Each	24.86	39.18	46.27
P	SCR06	#6-32 x 1 1/4" Pan Head Screws	(2)	Each	0.43	0.43	-
Q	SCX589	Drip Rail	(1)	Cut to Size	33.73	40.03	44.03
R	SC4000	Drip Plug	(1)	Each	0.47	-	-
S	SCV284	Tapered Drip Vinyl (37" pc.)	(1)	Each	3.51	-	-
T	SC4248	Two Faced Tape	(1)	Each	3.89	-	-
U	SCR11	#6 x 3/8" Truss Head Screw	(1)	Each	0.43	0.43	-
	PPDLX01	Parts Pak for 18CS		Each	32.07	41.71	52.51
	SCX543*	Curb Filler		Cut to Size	59.00	69.00	88.00
	SCX553*	1/2" Wall Filler		Cut to Size	43.00	53.00	72.00

**** 3 1/2" Hole-to-Hole handle dimension.**

Finish Selections (Code)

Chrome (SV)	Brushed Nickel (BN), Oil Rubbed Bronze (OR)	Bronze (BR), Satin Nickel (SN), White (WP), Matte Black (WI)

Inline Configurations

Bifold Door

Semi-Frameless Infinity (1433)

To insure correct fit when ordering cut to size parts, please indicate complete original unit number.

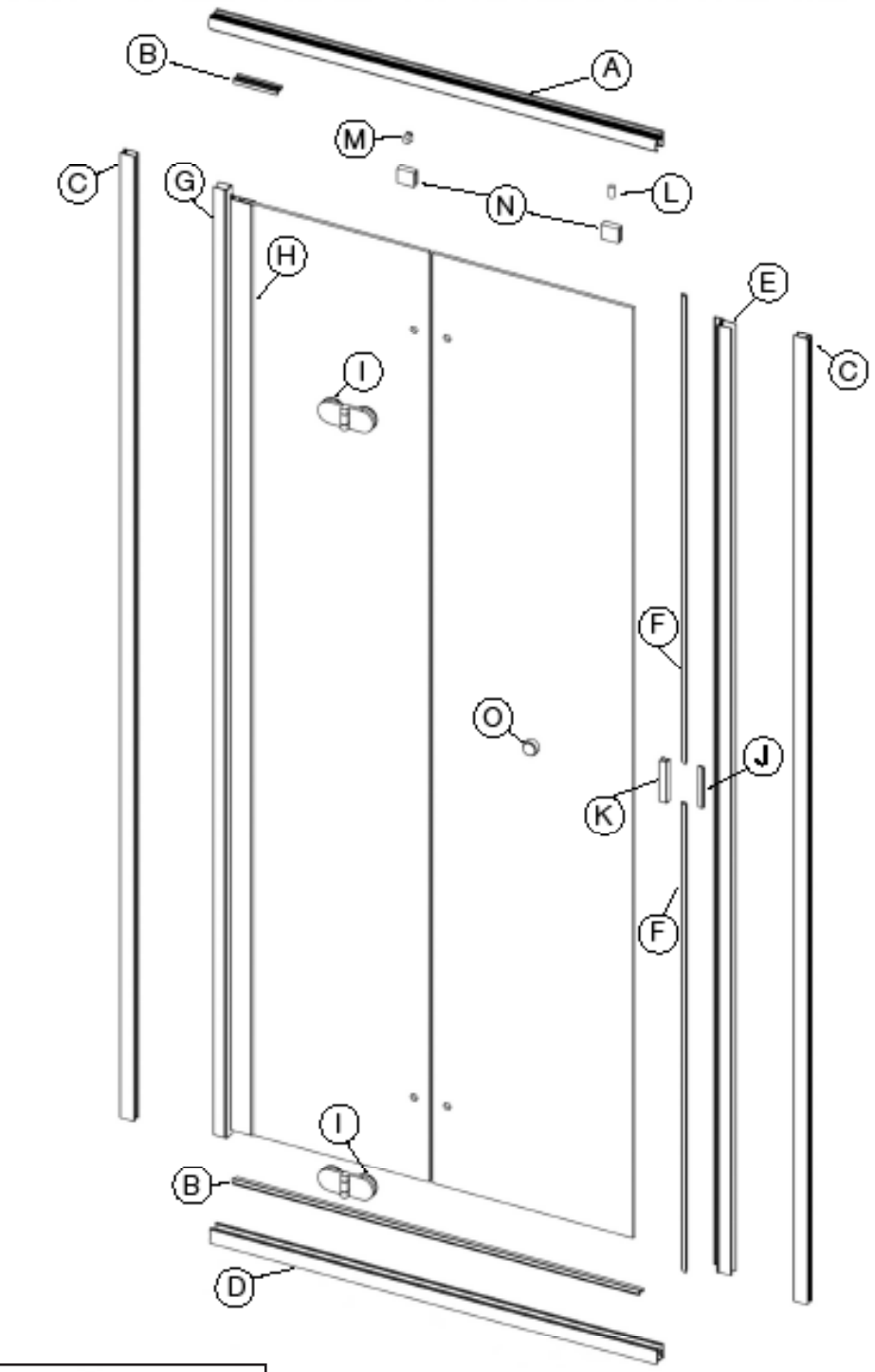

Notes

PPINF01 Parts Pak Includes: Letter K & SC4106, SCR10, SCR24 & SCV4123 PPINF53 Parts Pak Includes: Letters L, M, N, O, SCV601, SCR24, & SC5018
Fillers for out of plumb conditions:
SC878* for threshold (horizontal). SC553* for walls (vertical).

1433 Parts Listing

Part Letter	Part Number	Description	Qty/Unit	Length/Each	Chrome *(SV)*	Brushed Nickel *(BN)*
A	SCX504	Header	(1)	Cut to Size	71.02	79.59
B	SCX506	Snap-n-Filler	(2)	Cut to Size	34.79	41.39
C	SCX508	Wall Jamb	(2)	Cut to Size	53.24	69.17
D	SCX505B	Curb	(1)	Cut to Size	64.35	72.92
E	SCX552	Strike Jamb w/SCV253 (Magnet)	(1)	Cut to Size	73.49	95.24
F	SCV314-84	Strike Jamb Vinyl	(2)	Each	6.00	-
G	SCX649	Hinge Jamb	(1)	Cut to Size	72.24	83.13
H	SCX651	Hinge Rail	(1)	Cut to Size	73.68	85.63
I	INFHS-400	Door Hinge	(2)	Each	67.00	71.00
J	SC4030	Magnet for Strike Jamb		Each	19.99	-
K	SC784	Magnetic Latch & Plate	(1)	Each	44.30	52.03
L	SCV602	Door Guide	(1)	Each	24.00	-
M	SCV603	Stopper Clamp	(1)	Each	29.00	-
N	INFGS-400	Glass Clamp	(2)	Each	33.00	33.00
O	ROLKD-000	Knob	(1)	Each	19.00	19.00
	SCV351	Clear Bottom Vinyl/Sweep	(2)	Cut to Size	5.50	-
	SCV908	Strike/Vertical Vinyl	(1)	Each	48.40	-
	SC4106	Plastic Wall Anchor	(6)	Each	0.29	-
	SCR10	#8 x 1½" Truss Head Screw	(6)	Each	0.43	0.43
	SCR24	#6 x ⅜" Self Tapping Screw	(10)	Each	0.43	0.43
	SCV4123	Latch Vinyl	(6)	Each	1.21	-
	PPINF01	Parts Pak 1 for 1433		Each	38.02	49.02
	PPINF53	Parts Pak 2 for 1433		Each	188.00	188.00
	SCX553*	½" Wall Filler		Cut to Size	43.00	53.00
	SCX878*	Threshold/Curb Filler		Cut to Size	77.00	87.00
	SC4643	Mount Bushings *(f/ parts G & H)*	(2)	Each	2.93	-
	SC4642	Hinge Bushings *(f/ parts G & H)*	(2)	Each	6.53	-
	SC4644	Spacer Sleeve *(f/ parts G & H)*	(1)	Each	5.34	-
	SCV601	Clamp Vinyl	(2)	Each	25.00	-
	SCR5018	Screws f/ Mount Bushings *(f/ parts G & H)*	(2)	Each	0.44	-

***Please specify taper if needed and add $45.00 (SCTAPERCHARGE).**

Finish Selections (Code)

Chrome (SV)	Brushed Nickel (BN)

Inline Configurations

French Doors

Semi-Frameless Infinity (1022/1422)

To insure correct fit when ordering cut to size parts, please indicate complete original unit number.

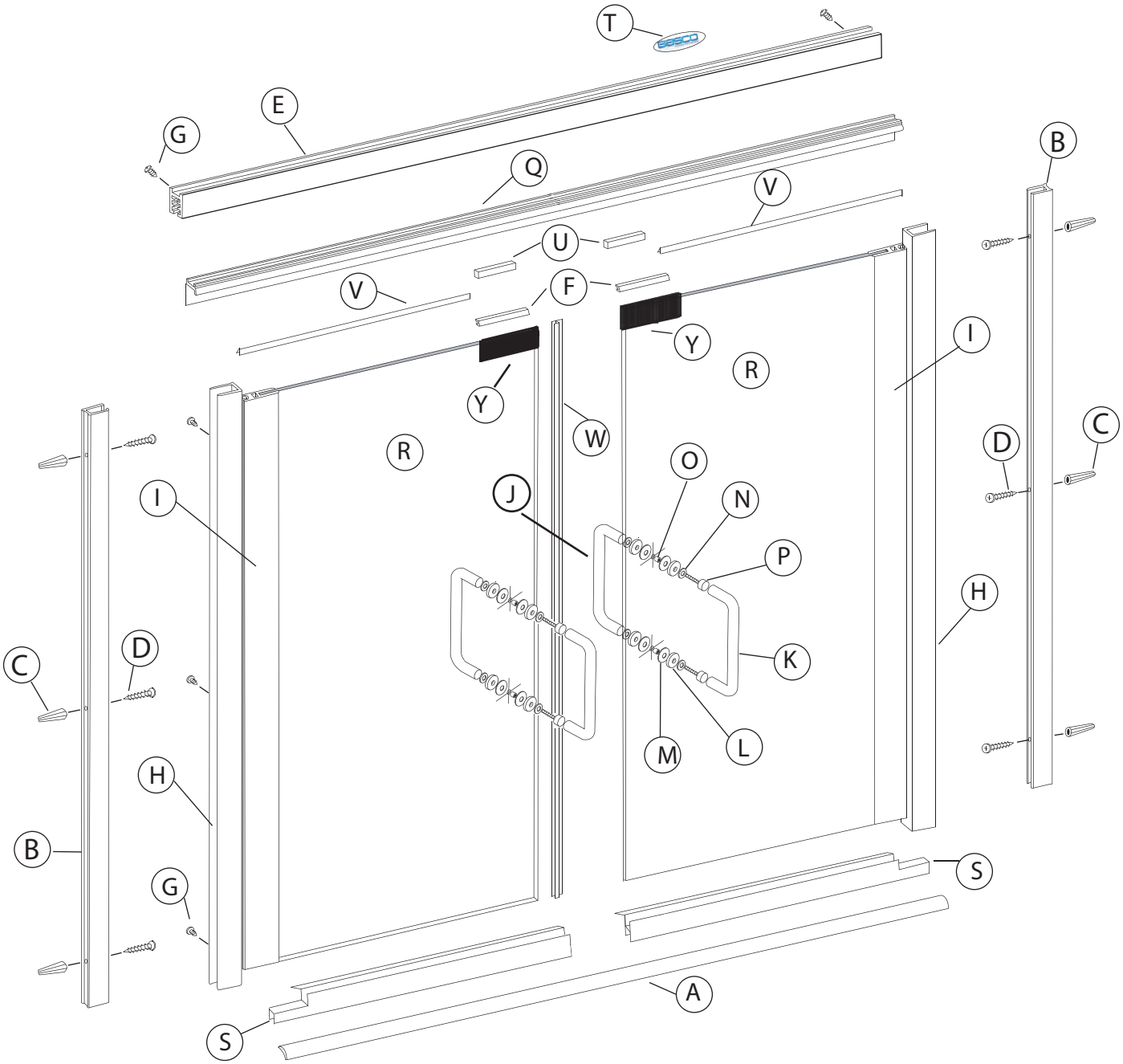

Notes

PP5900 Parts Pak Includes: F, SC4642, SC4643 & SC5018 PPINF91 Parts Pak Includes: C, D, F, G
Fillers for out of plumb conditions:
SC553* for walls (vertical).

1022/1422 Parts Listing

Part Letter	Part Number	Description	Qty/Unit	Length/Each	Chrome *(SV)*	Brushed Nickel *(BN)*, Oil Rubbed Bronze *(OR)*	All other finishes *(see below)*
A	SCX889	1/2 Moon Dam Strip (for 1022)	(1)	Cut to Size	40.60	45.28	58.75
A	SCX607	Curb	(1)	Cut to Size	50.82	59.29	76.66
B	SCX508	Wall Jamb	(2)	Cut to Size	53.24	69.16	82.11
C	SC4106	Plastic Wall Anchor	(6)	Each	0.29	-	-
D	SCR10	#8 x 1 1/2" Truss Head Screw	(6)	Each	0.43	0.43	-
E	SCX504	Header	(1)	Cut to Size	71.02	79.59	96.85
F	SC784	3" Latch with Vinyl (SCV294)	(2)	Each	44.30	52.03	70.54
G	SCR24	#6 x 3/8" Self Tapping Screws	(10)	Each	0.43	0.43	-
H	SCX649	Hinge Jamb	(2)	Cut to Size	72.24	83.13	98.07
I	SCX651	Door Rail	(2)	Cut to Size	73.68	85.63	115.52
J-P	CELPD-006	Handle Assembly	(1)	Each	56.00	58.00 (BN) 73.00 (OR)	78.00 108.00 (BG)
Q	SCX509	Snap-In Fill	(1)	Cut to Size	32.69	51.28	64.70
S	SCV451-38	Plastic Door Deflectors	(2)	Cut to Size	4.52	-	-
T	BAS-NP	Basco Name Plate	(1)	Each	1.10	-	-
U	SC4030	Magnet for Strike Jamb	(2)	Each	19.99	-	-
V	SCV314-84	Snap-n-Fill Vinyls	(2)	Each	6.00	-	-
W	SCV908	h-Jamb Vinyl	(1)	Each	48.40	-	-
Y	SCV294	Latch Vinyls	(2)	Each	4.02	-	-
	PP5900	Parts Pak 1 for 1022/1422		Each	14.96	27.00	-
	PPINF91	Parts Pak 2 for 1022/1422		Each	61.48	67.83	73.48
	SCX553*	1/2" Wall Filler		Cut to Size	43.00	53.00	72.00
	SCX891*	Curb Filler		Cut to Size	72.00	82.00	102.00
	SCV308	Glazing Vinyl f/ 1/4" Glass (F/Pt. B)		Per Ft.	1.12	-	-
	SC4643	Mount Bushings *(f/ parts H & I)*	(4)	Each	2.93	-	-
	SC4642	Hinge Bushings *(f/ parts H & I)*	(4)	Each	6.53	-	-
	SC4644	Spacer Sleeve *(f/ parts H & I)*	(2)	Each	5.34	-	-
	SCR5018	Screws f/ Mount Bushings *(f/ parts H & I)*	(4)	Each	0.44	-	-

***Please specify taper if needed and add $45.00 (SCTAPERCHARGE).**

**** 6" Hole-to-Hole Handle dimension.**

Finish Selections (Code)

Chrome (SV)	Brushed Nickel (BN), Oil Rubbed Bronze (OR)	Bronze (BR), Brushed Bronze (BB), Brushed Gold (BG) Satin Nickel (SN), White (WP), Matte Black (WI)

Inline Configurations

Panel/Door/Panel

Semi-Frameless Infinity (1412)

To insure correct fit when ordering cut to size parts, please indicate complete original unit number.

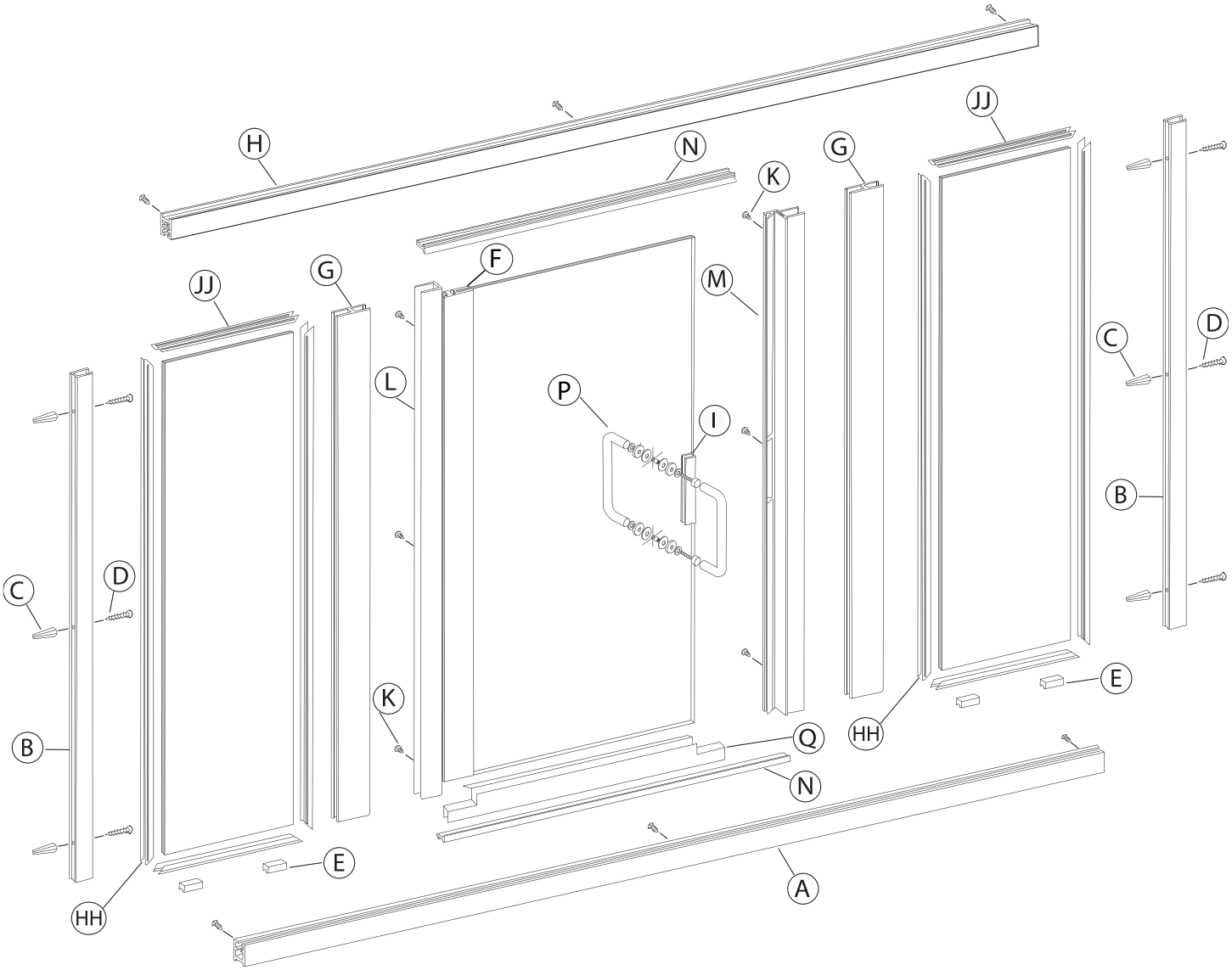

Notes

PPINF02 Parts Pak Includes:
Letters C, D,E, K, I

1412 Continuous Hinge Parts Listing

Part Letter	Part Number	Description	Qty/Unit	Length/Each	Chrome *(SV)*	Brushed Nickel *(BN)*, Oil Rubbed Bronze *(OR)*	All other finishes *(see below)*
A	SCX505B	Curb	(1)	Cut to Size	64.35	72.91	90.18
B	SCX508	Wall Jamb	(2)	Cut to Size	53.24	69.16	82.11
C	SC4106	Plastic Wall Anchor	(6)	Each	0.29	-	-
D	SCR10	#8 x 1 1/2" Truss Head Screw	(6)	Each	0.43	0.43	-
E	SCV221	Plastic Setting Block	(4)	Each	0.72	-	-
F	SCX651	Continuous Hinge Rail	(1)	Cut to Size	73.68	85.63	115.52
G	SCX511	180° Post	(2)	Cut to Size	62.98	86.79	100.20
H	SCX504	Header	(1)	Cut to Size	71.02	79.59	96.85
I	SC69570	3" Latch with Vinyl (SCV294)	(1)	Cut to Size	39.60	47.30	55.00
K	SCR02	#8 x 1/4" Truss Head Screw	(12)	Each	0.43	0.43	-
L	SCX649	Continuous Hinge Jamb	(1)	Cut to Size	72.24	83.13	98.07
M	SCX1452	Strike Jamb w/ Vinyl & Magnet	(1)	Each	100.00	125.00	200.00
N	SCX506	Snap-in Filler	(2)	Cut to Size	34.79	41.39	45.53
P	CELPD-006	Handle Assembly	(1)	Each	56.00	58.00 (BN) 73.00 (OR)	78.00 108.00 (BG)
Q	SCV351	Clear Bottom Sweep	(1)	Cut to Size	5.50	-	-
HH	SCV219	Vertical Glazing Vinyl	(8)	Per Ft.	1.18	-	-
JJ	SCV220	Horizontal Glazing Vinyl	(8)	Per Ft.	1.29	-	-
	SCV314-84	Strike Jamb Vinyl		Each	6.00	-	-
	PPINF02	Parts Pak for Infinity Units		Each	38.50	42.52	51.70
	SCV308	Door Glazing Vinyl 1/4" Glass *(f/ part F)*		Per Ft.	1.12	-	-
	SC4030	Magnet for Strike Jamb		Each	19.99	-	-
	SC4643	Mount Bushings *(f/ parts F & L)*	(2)	Each	2.93	-	-
	SC4642	Hinge Bushings *(f/ parts F & L)*	(2)	Each	6.53	-	-
	SC4644	Spacer Sleeve *(f/ parts F & L)*	(1)	Each	5.34	-	-
	SCR5018	Screws f/ Mount Bushings *(f/ parts F & L)*	(2)	Each	0.44	-	-
	SCX543*	Curb Filler		Cut to Size	59.00	69.00	88.00
	SCX553*	1/2" Wall Filler		Cut to Size	43.00	53.00	72.00
	SCX590*	1" Wall Filler - Wall Jamb		Cut to Size	68.00	77.00	96.00

***Please specify taper if needed and add $45.00 (SCTAPERCHARGE).**

Finish Selections (Code)

Chrome (SV)	Brushed Nickel (BN), Oil Rubbed Bronze (OR)	Bronze (BR), Brushed Bronze (BB), Brushed Gold (BG) Satin Nickel (SN), White (WP), Matte Black (WI)

Inline Configurations

Panel/Door/Panel

Framed Deluxe (125)

Model # 125HI/725HI prior to Jan. 2018

Please refer to pages 82-83 for Legacy pivot hinge model.

To insure correct fit when ordering cut to size parts, please indicate complete original unit number.

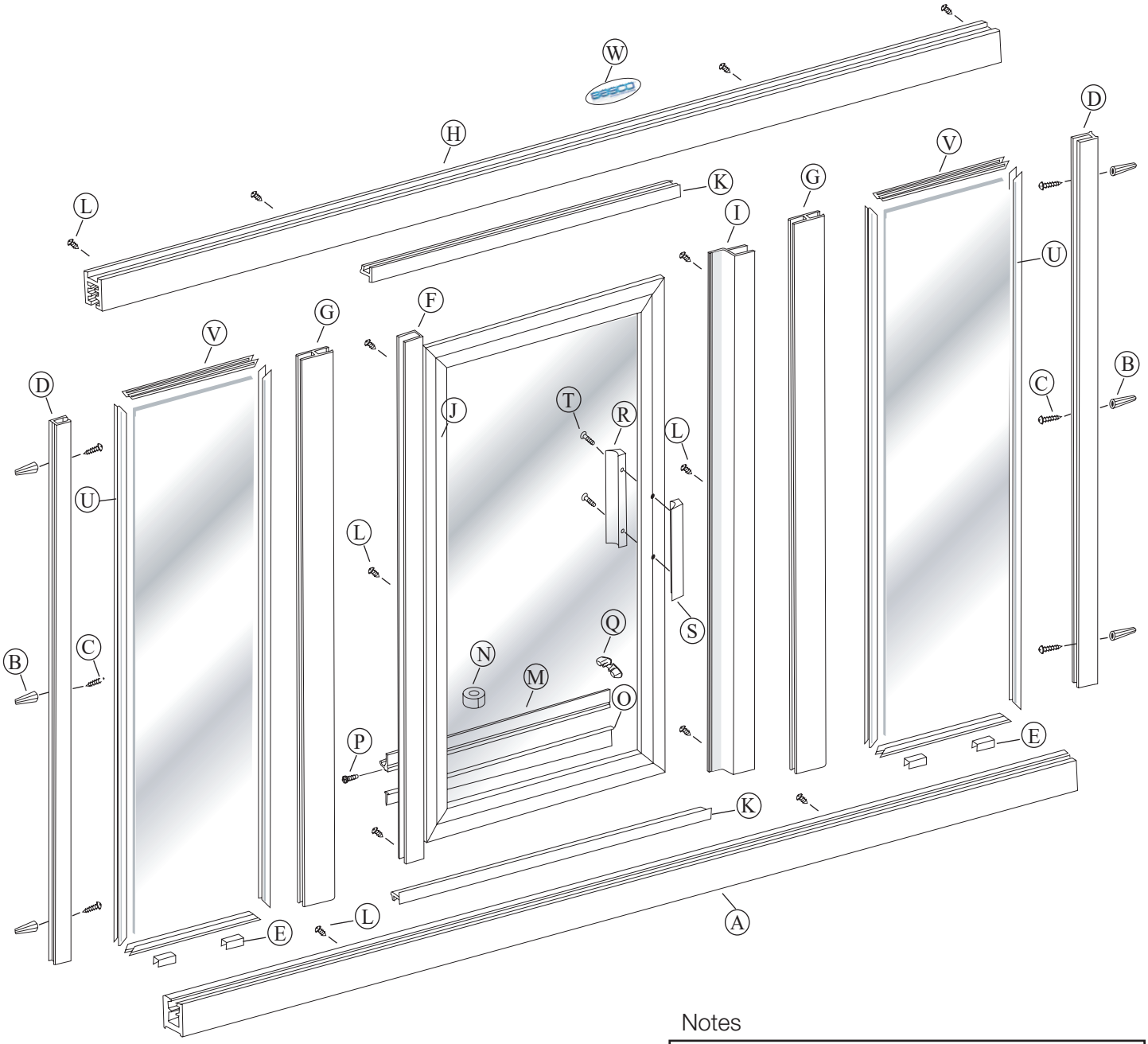

Notes

PPDLX02 Parts Pak Includes: Letters B, C, E, L, P, N, M, Q, R, S, T
Fillers for out of plumb conditions:
SC553* for walls (vertical). SC543* for threshold (horizontal).

Panel/Door/Panel

Framed Deluxe - (125)

Model # 125HI/725HI prior to Jan. 2018

Please refer to pages 82-83 for Legacy pivot hinge model.

125 Continuous Hinge Parts Listing

Part Letter	Part Number	Description	Qty/Unit	Length/Each	Chrome *(SV)*	Brushed Nickel *(BN)*, Oil Rubbed Bronze *(OR)*	All other finishes *(see below)*
A	SCX505B	Curb	(1)	Cut to Size	64.35	72.91	90.18
B	SC4106	Plastic Wall Anchor	(6)	Each	0.29	-	-
C	SCR10	#8 x 1 1/2" Truss Head Screw	(6)	Each	0.43	0.43	-
D	SCX508	Wall Jamb	(2)	Cut to Size	53.24	69.16	82.11
E	SCV221	Plastic Setting Block	(4)	Each	0.72	-	-
F	SCX649	Continuous Hinge Jamb	(1)	Cut to Size	72.24	83.13	98.07
G	SCX511	180° Post	(2)	Cut to Size	62.98	86.79	100.20
H	SCX505	Header	(1)	Cut to Size	57.35	67.13	85.60
I	SCX522	Strike Jamb w/SCV253 (Magnet)	(1)	Cut to Size	73.50	95.24	124.05
K	SCX506	Snap-n-Filler (no holes)	(2)	Cut to Size	34.79	41.39	45.53
J	SCX648	Continuous Hinge Rail	(1)	Cut to Size	44.75	62.17	66.77
L	SCR02	#8 x 1/4" Truss Head Screw	(12)	Each	0.43	0.43	-
M	SCX589	Drip Rail	(1)	Cut to Size	33.73	40.03	44.03
N	SC4248	Two Faced Tape	(1)	Each	3.89	-	-
O	SCV284	Tapered Drip Vinyl (37" pc.)	(1)	Each	3.51	-	-
P	SCR11	#6 x 3/8" Truss Head Screw	(1)	Each	0.43	-	-
Q	SC4000	Drip Plug	(1)	Each	0.47	-	-
R S	SC3317**	5" Exterior & Interior Handle	(1 Set)	Each	24.86	39.18	46.27
T	SCR06	#6 x 1 1/4" Handle Screw	(2)	Each	0.43	-	-
U	SCV226	Vertical Glazing Vinyl (3/16" Glass)	(8)	Per Ft.	1.02	-	-
V	SCV225	Horizontal Glazing Vinyl (3/16" Glass)	(4)	Per Ft.	1.12	-	-
W	BAS-NP	Basco Name Plate	(1)	Each	1.10	-	-
	SCX549	Strike Side Rail w/ Magnet (SCV253)	(1)	Cut to Size	76.71	91.52	107.68
	SCV253	Magnet	(1)	Per Ft.	1.01	-	-
	SCX899	Top or Bottom Door Rail	(2)	Cut to Size	49.45	67.08	73.80
	PPDLX02	Parts Pak for 125		Each	35.78	45.95	52.28
	SC4643	Mount Bushings *(f/ parts F & J)*	(2)	Each	2.93	-	-
	SC4642	Hinge Bushings *(f/ parts F & J)*	(2)	Each	6.53	-	-
	SC4644	Spacer Sleeve *(f/ parts F & J)*	(1)	Each	5.34	-	-
	SCX543*	Curb Filler		Cut to Size	59.00	69.00	88.00
	SCX553*	1/2" Wall Filler		Cut to Size	43.00	53.00	72.00

***Please specify taper if needed and add $45.00 (SCTAPERCHARGE). ** 3 1/2" Hole-to-Hole Handle dimension.**

Finish Selections (Code)

Chrome (SV)	Brushed Nickel (BN), Oil Rubbed Bronze (OR)	Bronze (BR), Satin Nickel (SN), White (WP), Matte Black (WI)

Inline Configurations

Door & Panel

Semi-Frameless Fusion (1435)

To insure correct fit when ordering cut to size parts, please indicate complete original unit number.

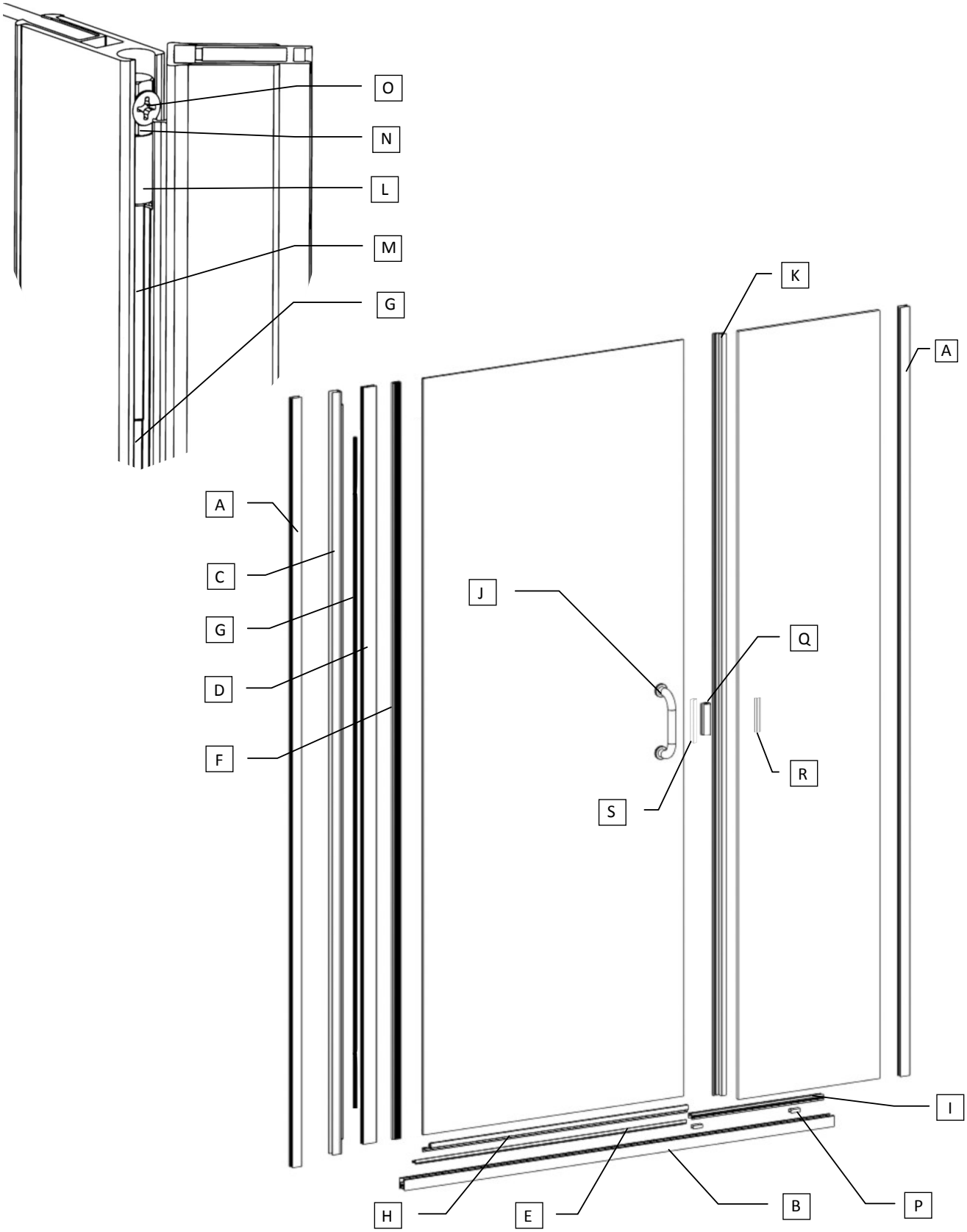

1435 Continuous Hinge Parts Listing

Part Letter	Part Number	Description	Qty/Unit	Length/Each	Chrome *(SV)*	Brushed Nickel *(BN)*, Oil Rubbed Bronze *(OR)*	All other finishes *(see below)*
A	SCX508	Wall Jamb	(2)	Cut to Size	53.24	69.17	82.12
B	SCX505B	Curb	(1)	Cut to Size	64.35	72.92	90.18
C	SCX649	Continuous Hinge Jamb	(1)	Cut to Size	72.24	83.13	98.07
D	SCX651	Continuous Hinge Rail	(1)	Cut to Size	73.68	85.63	115.52
E	SCX506	Snap-in Filler	(2)	Cut to Size	34.79	41.39	45.53
F	SCV308	Door Glazing Vinyl 1/4" Glass	(1)	Per Ft.	1.12	-	-
G	SC4644	Vinyl Spacer Sleeve	(1)	Each	5.34	-	-
H	SCV351	Clear Bottom Sweep	(1)	Cut to Size	5.50	-	-
I	SCV226	Panel Glazing Vinyl		Per Ft.	1.02	-	-
J	CELPD-006	Handle Assembly	(1)	Each	56.00	58.00 (BN) 73.00 (OR)	78.00 108.00 (BG)
K	SCV909	Door Strike Vinyl	(1)	Each	45.00	-	-
L	SC4021	Hinge Spacer	(1)	Each	0.23	-	-
M	SC4642	Hinge Bushings	(2)	Each	6.53	-	-
N	SC4643	Door Mount Bushings	(2)	Each	2.93	-	-
O	SCR5018	Countersunk screw #8 x 1/2"	(2)	Each	0.44	-	-
P	SCV221	Plastic Setting Block	(2)	Each	0.72	-	-
Q	SC784	Magnetic latch	(1)	Each	44.30	52.03	70.54
R	SC4032	Magnet	(1)	Each	7.68	-	-
S	SCV4123	Latch Vinyl	(1)	Each	1.21	-	-
	SC4106	Plastic Wall Anchor	(6)	Each	0.29	-	-
	SCR10	#8 x 1 1/2" Truss Head Screw	(6)	Each	0.43	0.43	-
	SCR24	Self drilling screw	(4)	Each	0.43	-	-
	SCV924	1/16" setting block	(4)	Each	0.48	-	-
	SCV925	1/8" setting block	(4)	Each	0.48	-	-
	PPFUS01	Parts Pak for Fusion Units		Each	69.30	76.29	-
	SCX543*	Curb Filler		Cut to Size	59.00	69.00	88.00
	SCX553*	1/2" Wall Filler		Cut to Size	43.00	53.00	72.00
	SCX590*	1" Wall Filler - Wall Jamb		Cut to Size	68.00	77.00	96.00

***Please specify taper if needed and add $45.00 (SCTAPERCHARGE).**

Finish Selections (Code)

Chrome (SV)	Brushed Nickel (BN), Oil Rubbed Bronze (OR)	Bronze (BR), Brushed Bronze (BB), Brushed Gold (BG) Satin Nickel (SN), White (WP), Matte Black (WI)

Inline Configurations

Door & Panel

Semi-Frameless Infinity (1413)

To insure correct fit when ordering cut to size parts, please indicate complete original unit number.

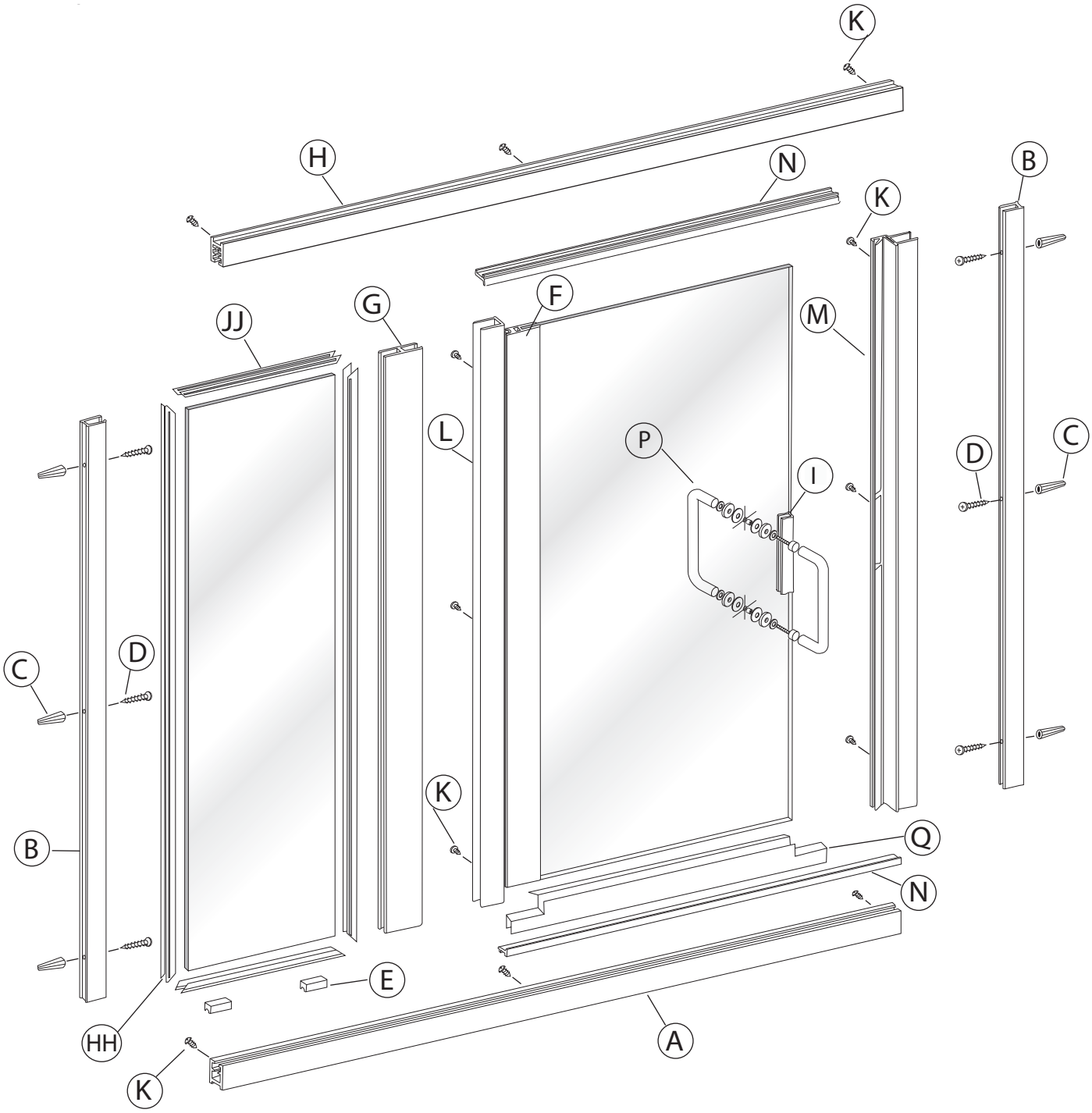

Notes

PPINF02 Parts Pak Includes: Letters C, D, E, I
Fillers for out of plumb conditions:
SC553* for walls (vertical). SC543* for threshold (horizontal).

1413 Continuous Hinge Parts Listing

Part Letter	Part Number	Description	Qty/Unit	Length/Each	Chrome *(SV)*	Brushed Nickel *(BN)*, Oil Rubbed Bronze *(OR)*	All other finishes *(see below)*
A	SCX505B	Curb	(1)	Cut to Size	64.35	72.91	90.18
B	SCX508	Wall Jamb	(2)	Cut to Size	53.24	69.16	82.11
C	SC4106	Plastic Wall Anchor	(6)	Each	0.29	-	-
D	SCR10	#8 x 1 1/2" Truss Head Screw	(6)	Each	0.43	0.43	-
E	SCV221	Plastic Setting Block	(2)	Each	0.72	-	-
F	SCX651	Continuous Hinge Rail	(1)	Cut to Size	73.68	85.63	115.52
G	SCX511	180° Post	(2)	Cut to Size	62.98	86.79	100.20
H	SCX504	Header	(1)	Cut to Size	71.02	79.59	96.85
I	SC69570	3" Latch with Vinyl (SCV294)	(1)	Cut to Size	39.60	47.30	55.00
K	SCR02	#8 x 1/4" Truss Head Screw	(14)	Each	0.43	0.43	-
L	SCX649	Continuous Hinge Jamb	(1)	Cut to Size	72.24	83.13	98.07
M	SCX1452	Strike Jamb w/ Vinyl & Magnet	(1)	Each	100.00	125.00	200.00
N	SCX506	Snap-in Filler	(2)	Cut to Size	34.79	41.39	45.53
P	CELPD-006	Handle Assembly	(1)	Each	56.00	58.00 (BN) 73.00 (OR)	78.00 108.00 (BG)
Q	SCV351	Clear Bottom Sweep	(1)	Cut to Size	5.50	-	-
HH	SCV219	Vertical Glazing Vinyl	(8)	Per Ft.	1.18	-	-
JJ	SCV220	Horizontal Glazing Vinyl	(8)	Per Ft.	1.29	-	-
	SCV314-84	Strike Jamb Vinyl		Each	6.00	-	-
	PPINF02	Parts Pak for Infinity Units		Each	38.50	42.52	51.70
	SCV308	Door Glazing Vinyl 1/4" Glass *(f/ part F)*		Per Ft.	1.12	-	-
	SC4030	Magnet for Strike Jamb		Each	19.99	-	-
	SC4643	Mount Bushings *(f/ parts F & L)*	(2)	Each	2.93	-	-
	SC4642	Hinge Bushings *(f/ parts F & L)*	(2)	Each	6.53	-	-
	SC4644	Spacer Sleeve *(f/ parts F & L)*	(1)	Each	5.34	-	-
	SCR5018	Screws f/ Mount Bushings *(f/ parts F & L)*	(2)	Each	0.44	-	-
	SCX543*	Curb Filler		Cut to Size	59.00	69.00	88.00
	SCX553*	1/2" Wall Filler		Cut to Size	43.00	53.00	72.00
	SCX590*	1" Wall Filler - Wall Jamb		Cut to Size	68.00	77.00	96.00

Finish Selections (Code)

Chrome (SV)	Brushed Nickel (BN), Oil Rubbed Bronze (OR)	Bronze (BR), Brushed Bronze (BB), Brushed Gold (BG) Satin Nickel (SN), White (WP), Matte Black (WI)

Inline Configurations

Door & Panel

Semi-Frameless Infinity (1413NP)

To insure correct fit when ordering cut to size parts, please indicate complete original unit number.

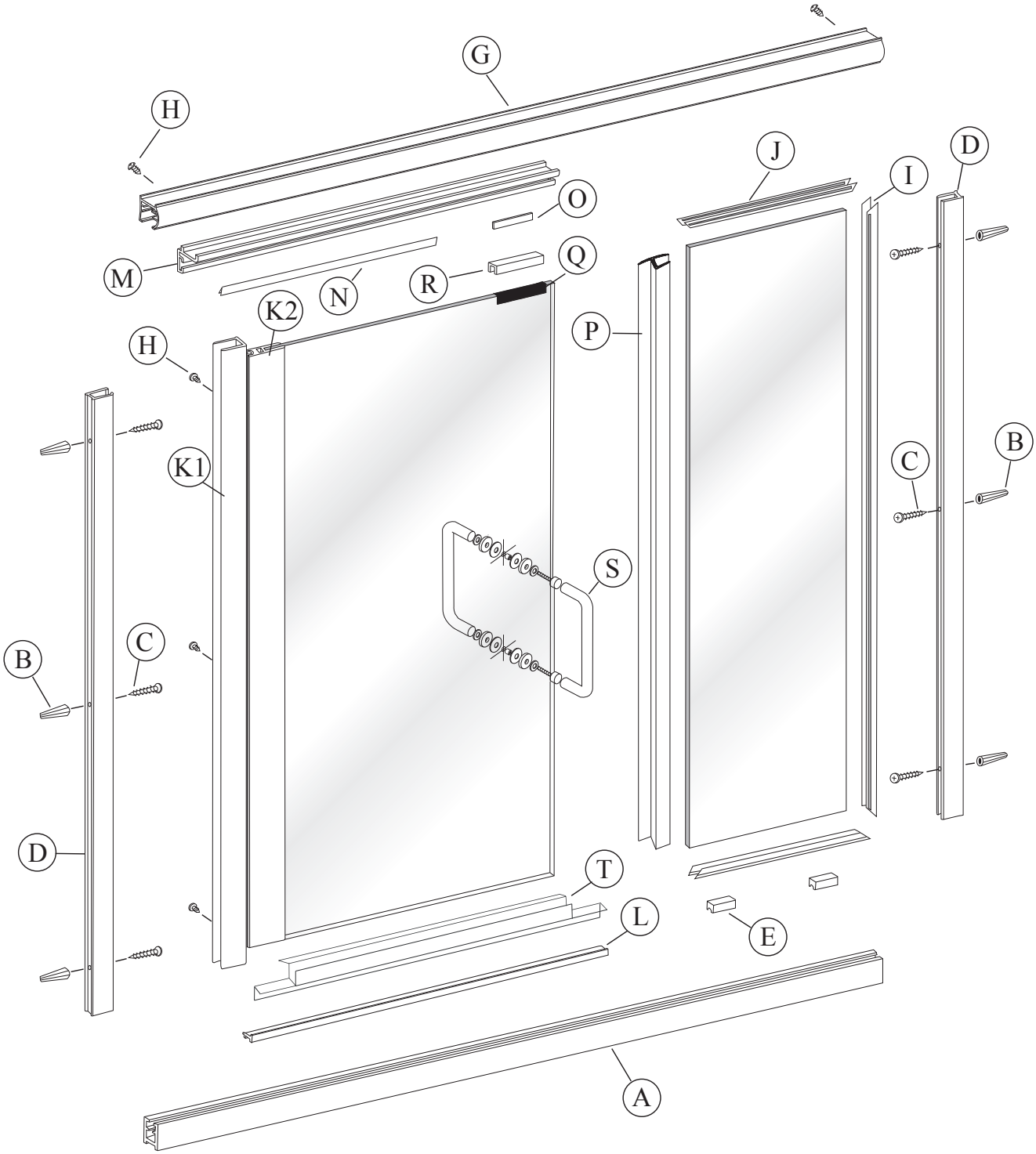

Notes

PPINF02 Parts Pak Includes: Letters C, D, E, Q, R
Fillers for out of plumb conditions:
SC553* for walls (vertical). SC543* for threshold (horizontal).

1413NP Continuous Hinge Parts Listing

Part Letter	Part Number	Description	Qty/Unit	Length/Each	Chrome *(SV)*	Brushed Nickel *(BN)*, Oil Rubbed Bronze *(OR)*	All other finishes *(see below)*
A	SCX505B	Curb	(1)	Cut to Size	64.35	72.91	90.18
B	SC4106	Plastic Wall Anchor	(6)	Each	0.29	-	-
C	SCR10	#8 x 1 1/2" Truss Head Screw	(6)	Each	0.43	0.43	-
D	SCX508	Wall Jamb	(2)	Cut to Size	53.24	69.16	82.11
E	SCV221	Plastic Setting Block	(2)	Each	0.72	-	-
G	SCX504	Header	(1)	Cut to Size	71.01	79.58	96.84
H	SCR02	#8 x 1/4" Truss Head Screw	(5)	Each	0.43	0.43	-
I	SCV219	Vertical Glazing Vinyl	(8)	Per Ft.	1.18	-	-
J	SCV220	Horizontal Glazing Vinyl	(8)	Per Ft.	1.29	-	-
K1	SCX649	Continuous Hinge Jamb	(1)	Cut to Size	72.24	83.13	98.07
K2	SCX651	Continuous Hinge Rail	(1)	Cut to Size	73.68	85.63	115.52
L	SCX506	Snap-in Filler	(1)	Cut to Size	34.79	41.39	45.53
M	SCX509	Snap-In Fill	(1)	Cut to Size	32.69	51.28	64.70
N	SCV314-84	Header Snap-in Filler Vinyl	(1)	Each	6.00	-	-
O	SC4030	Magnet	(1)	Each	19.99	-	-
P	SCV908	Strike Vinyl	(1)	Each	48.40	-	-
R	SC69570	3" Latch with Vinyl (Q - SCV294)	(1)	Cut to Size	39.60	47.30	55.00
S	CELPD-006	Handle Assembly	(1)	Each	56.00	58.00 (BN) 73.00 (OR)	78.00 108.00 (BG)
T	SCV351	Clear Bottom Sweep	(1)	Cut to Size	5.50	-	-
	PPINF02	Parts Pak for Infinity Units		Each	38.50	42.52	51.70
	SCV308	Door Glazing Vinyl 1/4" Glass *(f/ part K2)*		Per Ft.	1.12	-	-
	SC4643	Mount Bushings *(f/ parts K1 & K2)*	(2)	Each	2.93	-	-
	SC4642	Hinge Bushings *(f/ parts K1 & K2)*	(2)	Each	6.53	-	-
	SC4644	Spacer Sleeve *(f/ parts K1 & K2)*	(1)	Each	5.34	-	-
	SCR5018	Screws f/ Mount Bushings *(f/ K1 & K2)*	(2)	Each	0.44	-	-
	SCX543*	Curb Filler		Cut to Size	59.00	69.00	88.00
	SCX553*	1/2" Wall Filler		Cut to Size	43.00	53.00	72.00
	SCX590*	1" Wall Filler - Wall Jamb		Cut to Size	68.00	77.00	96.00

***Please specify taper if needed and add $45.00 (SCTAPERCHARGE).**

Finish Selections (Code)

Chrome (SV)	Brushed Nickel (BN), Oil Rubbed Bronze (OR)	Bronze (BR), Brushed Bronze (BB) Satin Nickel (SN), White (WP), Matte Black (WI)

Inline Configurations

Door & Panel

Framed Deluxe (135)

Model # 135HI/735HI prior to Jan. 2018

Please refer to pages 88-89 for Legacy pivot hinge model.

To insure correct fit when ordering cut to size parts, please indicate complete original unit number.

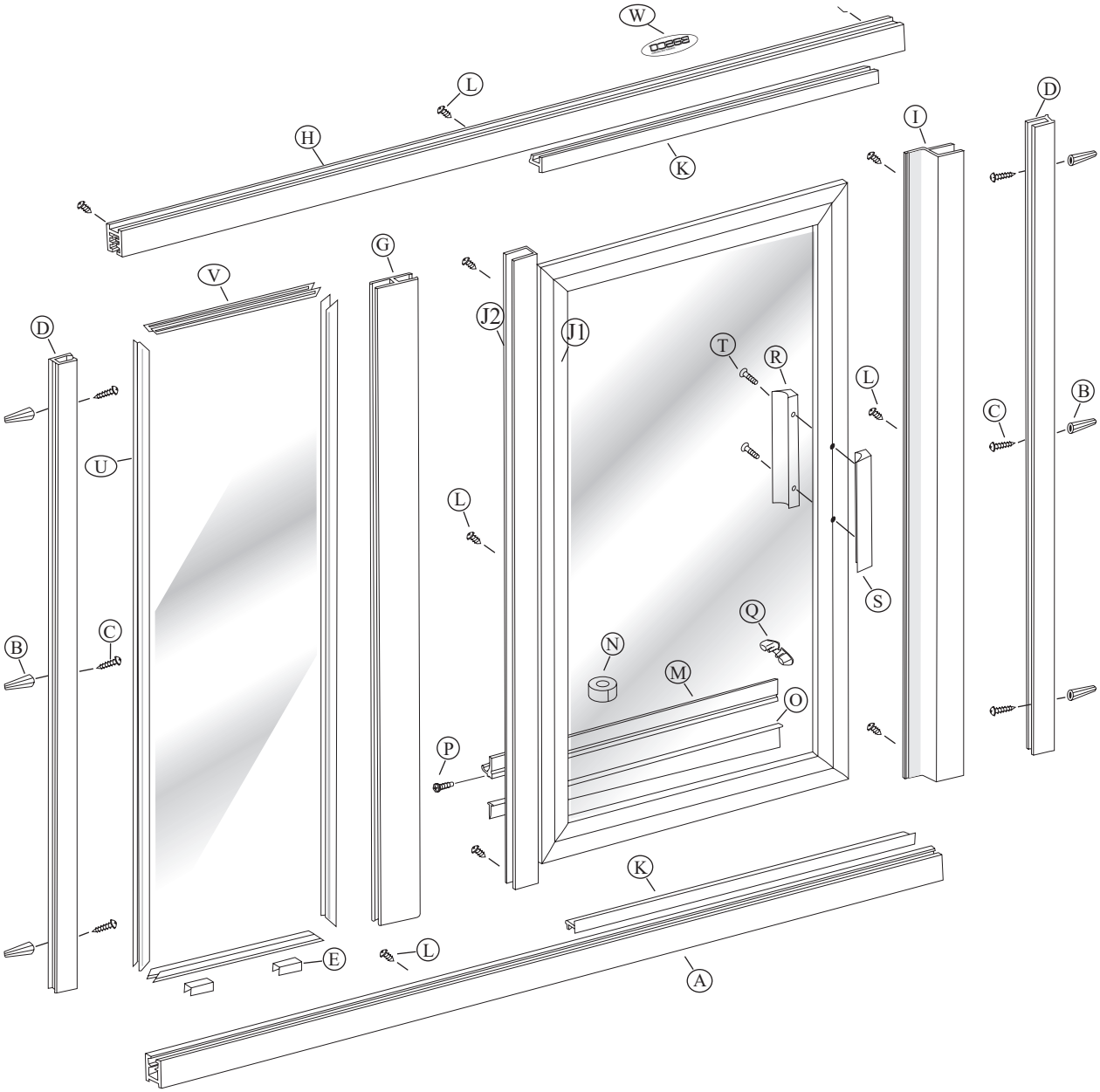

Notes

PPDLX02 Parts Pak Includes: Letters B, C, E, L, M, N, P, Q, R, S, T
Fillers for out of plumb conditions:
SC553* for walls (vertical). SC543* for threshold (horizontal).

Door & Panel

Framed Deluxe (135)

Model # 135HI/735HI prior to Jan. 2018

Please refer to pages 88-89 for Legacy pivot hinge model.

135 Continuous Hinge Parts Listing

Part Letter	Part Number	Description	Qty/Unit	Length/Each	Chrome *(SV)*	Brushed Nickel *(BN)*, Oil Rubbed Bronze *(OR)*	All other finishes *(see below)*
A	SCX505B	Curb	(1)	Cut to Size	64.35	72.91	90.18
B	SC4106	Plastic Wall Anchor	(6)	Each	0.29	-	-
C	SCR10	#8 x 1 1/2" Truss Head Screw	(6)	Each	0.43	0.43	-
D	SCX508	Wall Jamb	(2)	Cut to Size	53.24	69.16	82.11
E	SCV221	Plastic Setting Block	(2)	Each	0.72	-	-
G	SCX511	180° Post	(1)	Cut to Size	62.98	86.79	100.20
H	SCX505	Header	(1)	Cut to Size	57.35	67.13	85.60
I	SCX522	Strike Jamb w/SCV253 (Magnet)	(1)	Cut to Size	73.50	95.24	124.05
J1	SCX648	Continuous Hinge Rail	(1)	Cut to Size	44.75	62.17	66.77
J2	SCX649	Continuous Hinge Jamb	(1)	Cut to Size	72.24	83.13	98.07
K	SCX506	Snap-n-Filler (no holes)	(2)	Cut to Size	34.79	41.39	45.53
L	SCR02	#8 x 1/4" Truss Head Screw	(9)	Each	0.43	0.43	-
M	SCX589	Drip Rail	(1)	Cut to Size	33.73	40.03	44.03
O	SCV284	Tapered Drip Vinyl (37" pc.)	(1)	Each	3.51	-	-
P	SCR11	#6 x 3/8" Truss Head Screw	(1)	Each	0.43	-	-
Q	SC4000	Drip Plug	(1)	Each	0.47	-	-
N	SC4248	Two Faced Tape	(1)	Each	3.89	-	-
R S	SC3317**	5" Exterior & Interior Handle	(1 Set)	Each	24.86	39.18	46.27
T	SCR06	#6 x 1 1/4" Handle Screw	(2)	Each	0.43	-	-
U	SCV226	Vertical Glazing Vinyl (3/16" Glass)	(4)	Per Ft.	1.02	-	-
V	SCV225	Horizontal Glazing Vinyl (3/16" Glass)	(4)	Per Ft.	1.12	-	-
W	BAS-NP	Basco Name Plate	(1)	Each	1.10	-	-
	SCX899	Top or Bottom Door Rail	(2)	Cut to Size	49.45	67.08	73.80
	SCX549	Strike Side Rail w/ Magnet (SCV253)	(1)	Cut to Size	76.71	91.52	107.68
	SC4643	Mount Bushings *(f/ parts F & L)*	(2)	Each	2.93	-	-
	SC4642	Hinge Bushings *(f/ parts F & L)*	(2)	Each	6.53	-	-
	SC4644	Spacer Sleeve *(f/ parts F & L)*	(1)	Each	5.34	-	-
	SCR05	Glazing Screw	(4)	Each	0.39	-	-
	SCV52	Door Glazing Vinyl		Per Ft.	0.81	-	-
	PPDLX02	Parts Pak for 135		Each	35.78	45.95	52.28
	SCX543*	Curb Filler		Cut to Size	59.00	69.00	88.00
	SCX553*	1/2" Wall Filler		Cut to Size	43.00	53.00	72.00

***Please specify taper if needed and add $45.00 (SCTAPERCHARGE). ** 3 1/2" Hole-to-Hole Handle dimension.**

Finish Selections (Code)

Chrome (SV)	Brushed Nickel (BN), Oil Rubbed Bronze (OR)	Bronze (BR), Satin Nickel (SN), White (WP), Matte Black (WI)

Return Configurations

Door & Return Panel

Semi-Frameless Infinity (1414)

To insure correct fit when ordering cut to size parts, please indicate complete original unit number.

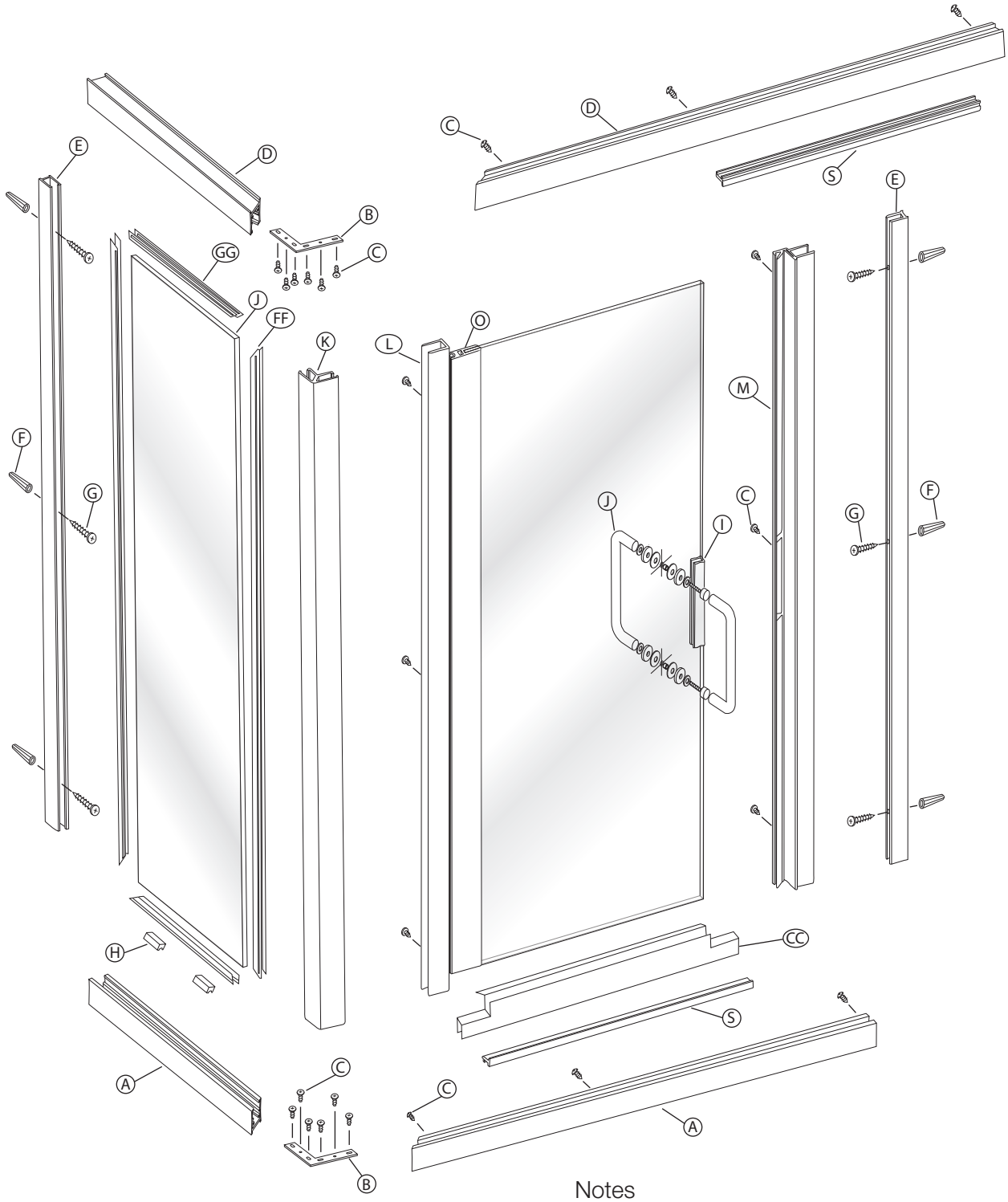

Notes

PPINF02 Parts Pak Includes: Letters F, G, H, I
Fillers for out of plumb conditions:
SC553* for walls (vertical). SC543* for threshold (horizontal).

1414 Continuous Hinge Parts Listing

Part Letter	Part Number	Description	Qty/Unit	Length/Each	Chrome *(SV)*	Brushed Nickel *(BN)*, Oil Rubbed Bronze *(OR)*	All other finishes *(see below)*
A	SCX505B	Curb	(2)	Cut to Size	64.35	72.91	90.18
B	SC4123	90° Anchor Plate	(2)	Each	11.76	-	-
C	SCR02	#8 x 1/4" Truss Head Screw	(20)	Each	0.43	0.43	-
D	SCX504	Header	(2)	Cut to Size	71.02	79.59	96.85
E	SCX508	Wall Jamb	(2)	Cut to Size	53.24	69.16	82.11
F	SC4106	Plastic Wall Anchor	(6)	Each	0.29	-	-
G	SCR10	#8 x 1 1/2" Truss Head Screw	(6)	Each	0.43	0.43	-
H	SCV221	Plastic Setting Block	(2)	Each	0.72	-	-
I	SC69570	3" Latch with Vinyl (SCV294)	(1)	Cut to Size	39.60	47.30	55.00
J	CELPD-006	Handle Assembly	(1)	Each	56.00	58.00 (BN) 73.00 (OR)	78.00 108.00 (BG)
K	SCX513	90° Corner Post	(1)	Cut to Size	78.57	107.56	112.68
L	SCX649	Continuous Hinge Jamb	(1)	Cut to Size	72.24	83.13	98.07
M	SCX1452	Strike Jamb w/ Vinyl & Magnet	(1)	Each	100.00	125.00	200.00
N	SCX506	Snap-in Filler	(2)	Cut to Size	34.79	41.39	45.53
O	SCX651	Continuous Hinge Rail	(1)	Cut to Size	73.68	85.63	115.52
Q	SCV351	Clear Bottom Sweep	(1)	Cut to Size	5.50	-	-
FF	SCV219	Vertical Glazing Vinyl	(8)	Per Ft.	1.18	-	-
GG	SCV220	Horizontal Glazing Vinyl	(8)	Per Ft.	1.29	-	-
	SCV314-84	Strike Jamb Vinyl		Each	6.00	-	-
	PPINF02	Parts Pak for Infinity Units		Each	38.50	42.52	51.70
	SCV308	Door Glazing Vinyl 1/4" Glass *(f/ part O)*		Per Ft.	1.12	-	-
	SC4030	Magnet for Strike Jamb		Each	19.99	-	-
	SC4643	Mount Bushings *(f/ parts L & O)*	(2)	Each	2.93	-	-
	SC4642	Hinge Bushings *(f/ parts L & O)*	(2)	Each	6.53	-	-
	SC4644	Spacer Sleeve *(f/ parts L & O)*	(1)	Each	5.34	-	-
	SCR5018	Screws f/ Mount Bushings *(f/ parts L & O)*	(2)	Each	0.44	-	-
	SCX543*	Curb Filler		Cut to Size	59.00	69.00	88.00
	SCX553*	1/2" Wall Filler		Cut to Size	43.00	53.00	72.00
	SCX590*	1" Wall Filler - Wall Jamb		Cut to Size	68.00	77.00	96.00

***Please specify taper if needed and add $45.00 (SCTAPERCHARGE).**

Finish Selections (Code)

Chrome (SV)	Brushed Nickel (BN), Oil Rubbed Bronze (OR)	Bronze (BR), Brushed Bronze (BB) Satin Nickel (SN), White (WP), Matte Black (WI)

Return Configurations

Door & Return Panel

Framed Deluxe (145)

Model # 145HI/745HI prior to Jan. 2018

Please refer to pages 92-93 for Legacy pivot hinge model.

To insure correct fit when ordering cut to size parts, please indicate complete original unit number.

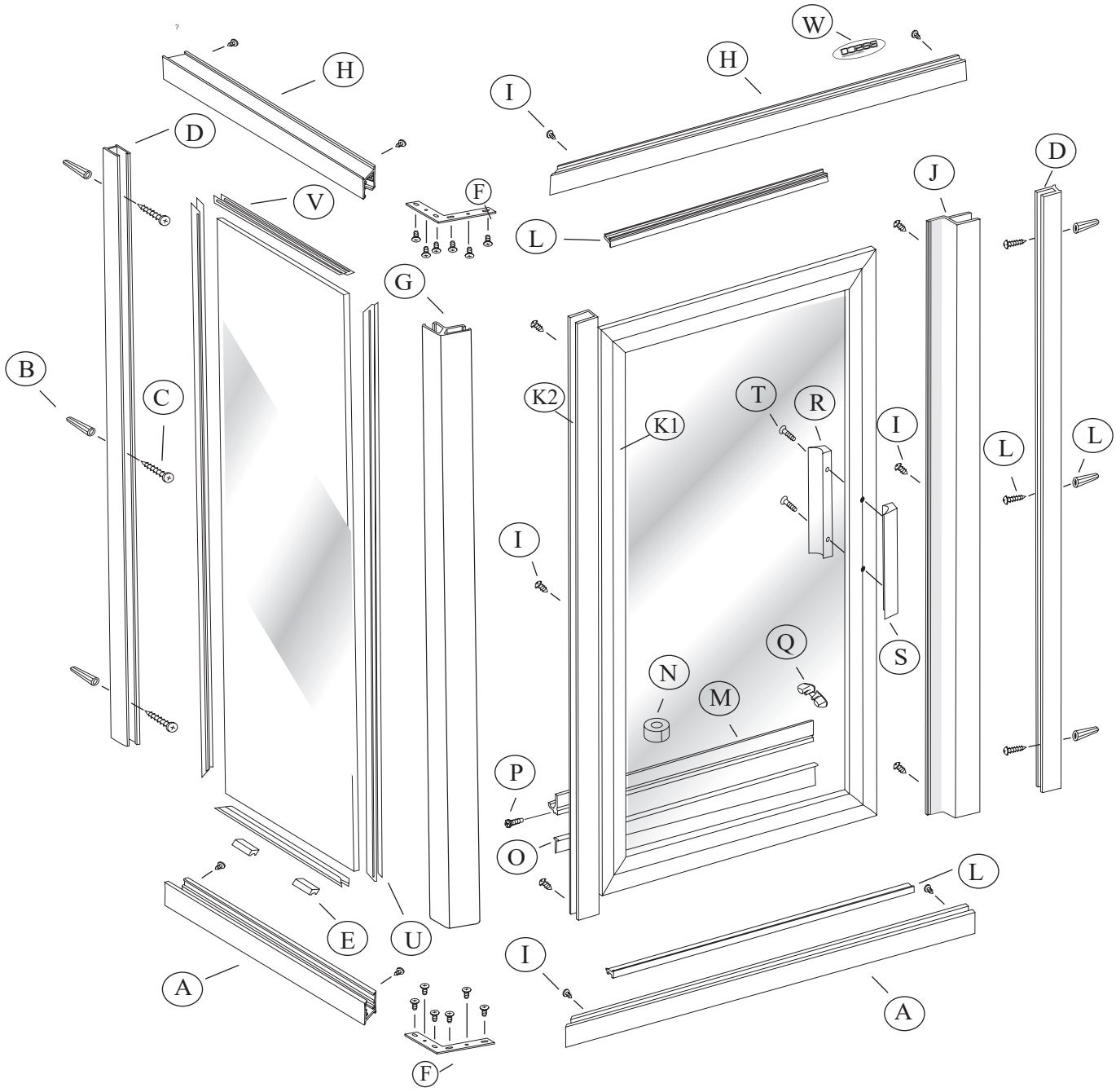

Notes

PPDLX02 Parts Pak Includes: Letters B, C, E, L, M, N, P, Q, R, S, T
Fillers for out of plumb conditions:
SC553* for walls (vertical). SC543* for threshold (horizontal).

Door & Return Panel

Framed Deluxe (145)

Model # 145HI/745HI prior to Jan. 2018

Please refer to pages 92-93 for Legacy pivot hinge model.

145 Continuous Hinge Parts Listing

Part Letter	Part Number	Description	Qty/Unit	Length/Each	Chrome *(SV)*	Brushed Nickel *(BN)*, Oil Rubbed Bronze *(OR)*	All other finishes *(see below)*
A	SCX505B	Curb	(2)	Cut to Size	64.35	72.91	90.18
B	SC4106	Plastic Wall Anchor	(6)	Each	0.29	-	-
C	SCR10	#8 x 1 1/2" Truss Head Screw	(6)	Each	0.43	0.43	-
D	SCX508	Wall Jamb	(2)	Cut to Size	53.24	69.16	82.11
E	SCV221	Plastic Setting Block	(2)	Each	0.72	-	-
F	SC4123	90° Anchor Plate	(2)	Each	11.76	-	-
G	SCX513	90° Corner Post	(1)	Cut to Size	78.57	107.56	112.68
H	SCX505	Header	(2)	Cut to Size	57.35	67.13	85.60
I	SCR02	#8 x 1/4" Truss Head Screw	(24)	Each	0.43	0.43	-
J	SCX522	Strike Jamb w/SCV253 (Magnet)	(1)	Cut to Size	73.50	95.24	124.05
K1	SCX649	Continuous Hinge Jamb	(1)	Cut to Size	72.24	83.13	98.07
K2	SCX648	Continuous Hinge Rail	(1)	Cut to Size	44.75	62.17	66.77
L	SCX506	Snap-n-Filler (no holes)	(2)	Cut to Size	34.79	41.39	45.53
M	SCX589	Drip Rail	(1)	Cut to Size	33.73	40.03	44.03
Q	SC4000	Drip Plug	(1)	Each	0.47	-	-
O	SCV284	Tapered Drip Vinyl (37" pc.)	(1)	Each	3.51	-	-
P	SCR11	#6 x 3/8" Truss Head Screw	(1)	Each	0.43	-	-
N	SC4248	Two Faced Tape	(1)	Each	3.89	-	-
R S	SC3317**	5" Exterior & Interior Handle	(1 Set)	Each	24.86	39.18	46.27
T	SCR06	#6 x 1 1/4" Handle Screw	(2)	Each	0.43	-	-
U	SCV226	Vertical Glazing Vinyl (3/16" Glass)	(4)	Per Ft.	1.02	-	-
V	SCV225	Horizontal Glazing Vinyl (3/16" Glass)	(4)	Per Ft.	1.12	-	-
W	BAS-NP	Basco Name Plate	(1)	Each	1.10	-	-
	SCX899	Top or Bottom Door Rail	(2)	Cut to Size	49.45	67.08	73.80
	SCX549	Strike Side Rail w/ Magnet (SCV253)	(1)	Cut to Size	76.71	91.52	107.68
	SC4643	Mount Bushings *(f/ parts K1 & K2)*	(2)	Each	2.93	-	-
	SC4642	Hinge Bushings *(f/ parts K1 & K2)*	(2)	Each	6.53	-	-
	SC4644	Spacer Sleeve *(f/ parts K1 & K2)*	(1)	Each	5.34	-	-
	SC4609	Door Bushings	(2)	Each	2.93	-	-
	PPDLX02	Parts Pak for 145		Each	35.78	45.95	52.28
	SCX543*	Curb Filler		Cut to Size	59.00	69.00	88.00
	SCX553*	1/2" Wall Filler		Cut to Size	43.00	53.00	72.00

***Please specify taper if needed and add $45.00 (SCTAPERCHARGE). ** 3 1/2" Hole-to-Hole Handle dimension.**

Finish Selections (Code)

Chrome (SV)	Brushed Nickel (BN), Oil Rubbed Bronze (OR)	Bronze (BR), Satin Nickel (SN), White (WP), Matte Black (WI)

Return Configurations

Door, Inline Panel & Return Panel

Semi-Frameless Infinity (1450)

To insure correct fit when ordering cut to size parts, please indicate complete original unit number.

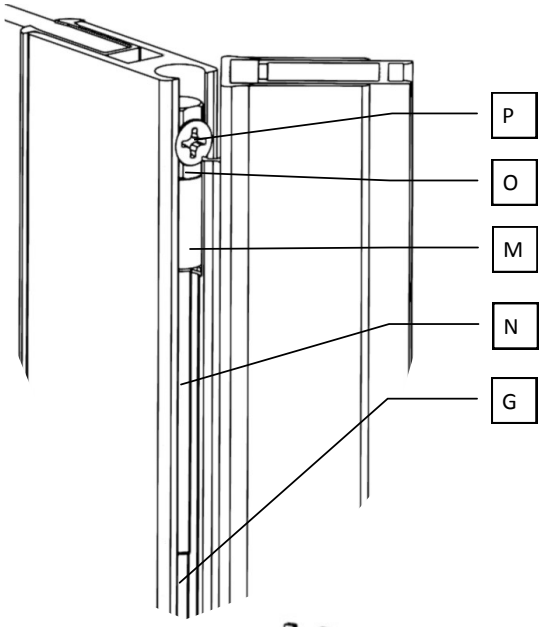

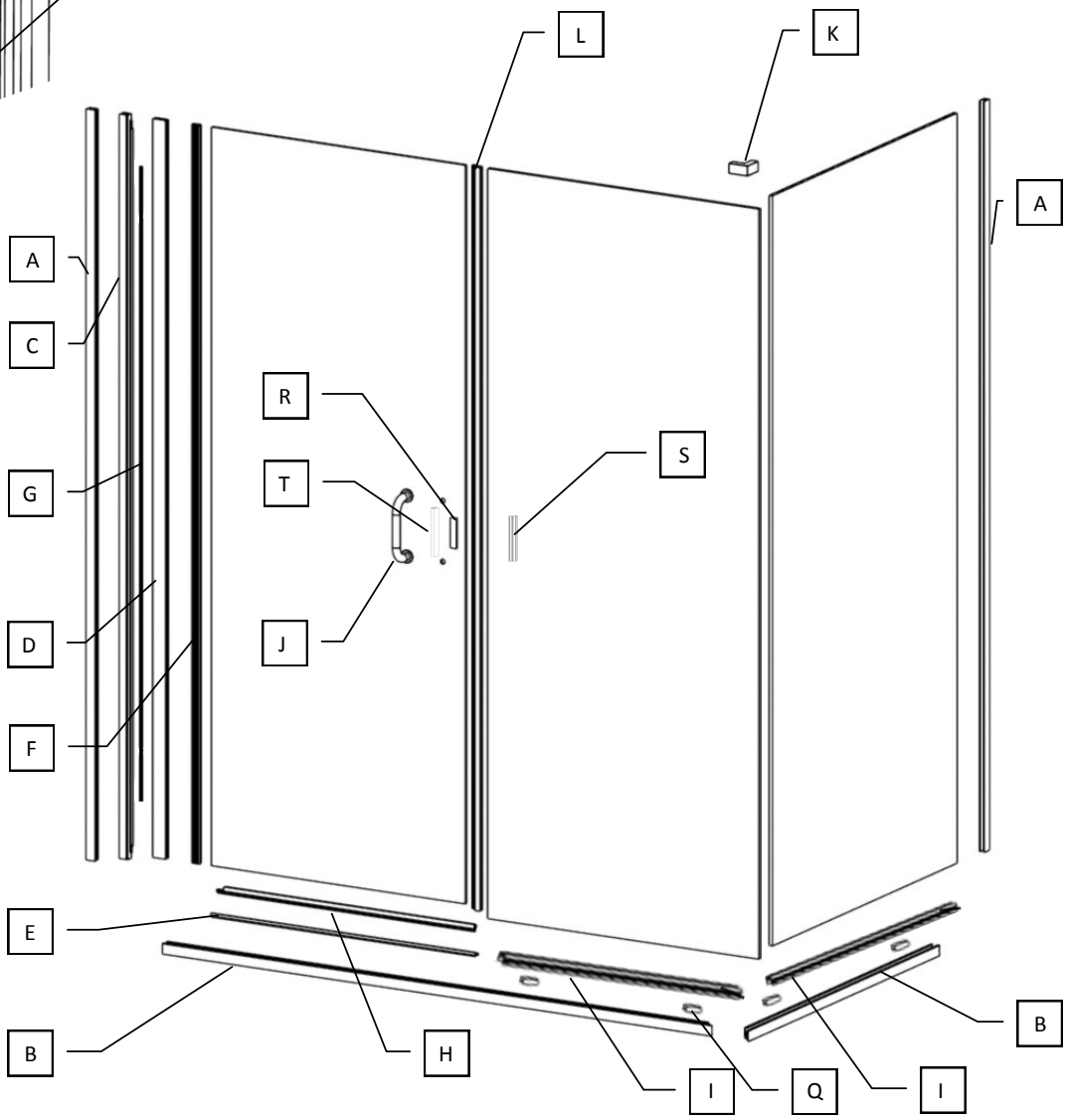

1450 Continuous Hinge Parts Listing

Part Letter	Part Number	Description	Qty/Unit	Length/Each	Chrome *(SV)*	Brushed Nickel *(BN)*, Oil Rubbed Bronze *(OR)*	All other finishes *(see below)*
A	SCX508	Wall Jamb	(2)	Cut to Size	53.24	69.16	82.11
B	SCX505B	Curb	(2)	Cut to Size	64.35	72.91	90.18
C	SCX649	Continuous Hinge Jamb	(1)	Cut to Size	72.24	83.13	98.07
D	SCX651	Continuous Hinge Rail	(1)	Cut to Size	73.68	85.63	115.52
E	SCX506	Snap-in Filler	(2)	Cut to Size	34.79	41.39	45.53
F	SCV308	Door Glazing Vinyl 1/4" Glass	(1)	Per Ft.	1.12	-	-
G	SC4644	Vinyl Spacer Sleeve	(1)	Each	5.34	-	-
H	SCV351	Clear Bottom Sweep	(1)	Cut to Size	5.50	-	-
I	SCV226	Panel Glazing Vinyl		Per Ft.	1.02	-	-
J	CELPD-006	Handle Assembly	(1)	Each	56.00	58.00 (BN) 73.00 (OR)	78.00 108.00 (BG)
K	RODAU-090	Corner sleeve over clamp	(1)	Each	37.00	38.00 (BN), 59.00(OR)	59.00
L	SCV909	Door Strike Vinyl	(1)	Each	45.00	-	-
M	SC4021	Hinge Spacer	(1)	Each	0.23	-	-
N	SC4642	Hinge Bushings	(2)	Each	6.53	-	-
O	SC4643	Door Mount Bushings	(2)	Each	2.93	-	-
P	SCR5018	Countersunk screw #8 x 1/2"	(2)	Each	0.44	-	-
Q	SCV221	Plastic Setting Block	(2)	Each	0.72	-	-
R	SC784	Magnetic latch	(1)	Each	44.30	52.03	70.54
S	SC4032	Magnet	(1)	Each	7.68	-	-
T	SCV4123	Latch Vinyl	(1)	Each	1.21	-	-
	SC4106	Plastic Wall Anchor	(6)	Each	0.29	-	-
	SCR10	#8 x 1 1/2" Truss Head Screw	(6)	Each	0.43	0.43	-
	SCR24	Self drilling screw	(4)	Each	0.43	-	-
	SCR02	Truss head screw #8 x 1/4"	(6)	Each	0.43	-	-
	SC4123	L bracket	(1)	Each	11.76	-	-
	SCV924	1/16" setting block	(4)	Each	0.48	-	-
	SCV925	1/8" setting block	(4)	Each	0.48	-	-
	PPFUS02	Parts Pak for Fusion Units		Each	90.64	106.15	107.95
	SCX543*	Curb Filler		Cut to Size	59.00	69.00	88.00
	SCX553*	1/2" Wall Filler		Cut to Size	43.00	53.00	72.00
	SCX590*	1" Wall Filler - Wall Jamb		Cut to Size	68.00	77.00	96.00

***Please specify taper if needed and add $45.00 (SCTAPERCHARGE).**

Finish Selections (Code)

Chrome (SV)	Brushed Nickel (BN), Oil Rubbed Bronze (OR)	Bronze (BR), Satin Nickel (SN), White (WP), Matte Black (WI)

Return Configurations

Door, Inline Panel & Return Panel

Semi-Frameless Infinity (1415)

To insure correct fit when ordering cut to size parts, please indicate complete original unit number.

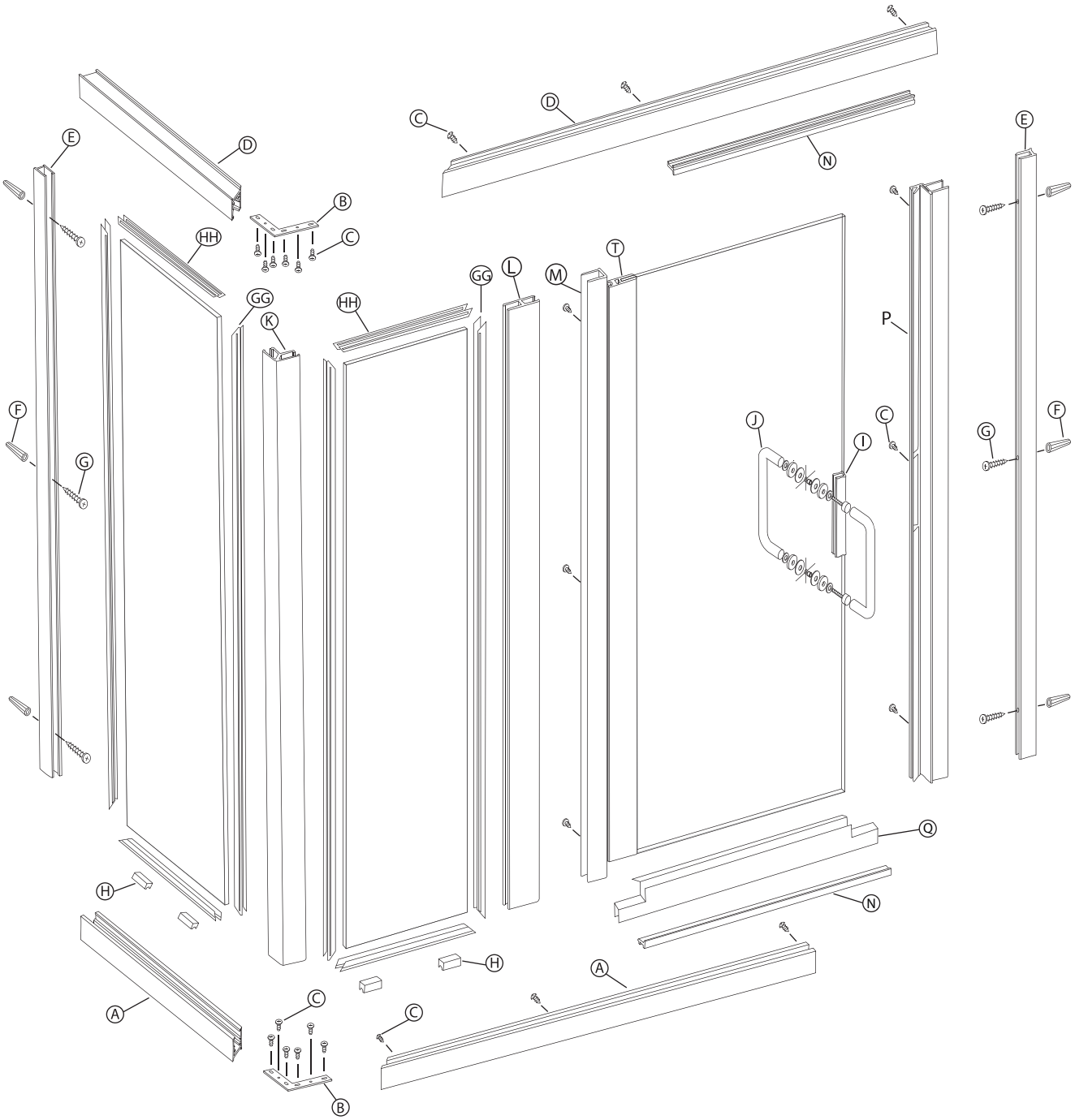

Notes

PPINF02 Parts Pak Includes: Letters F, G, H, I
Fillers for out of plumb conditions:
SC553* for walls (vertical). SC543* for threshold (horizontal).

1415 Continuous Hinge Parts Listing

Part Letter	Part Number	Description	Qty/Unit	Length/Each	Chrome *(SV)*	Brushed Nickel *(BN)*, Oil Rubbed Bronze *(OR)*	All other finishes *(see below)*
A	SCX505B	Curb	(2)	Cut to Size	64.35	72.91	90.18
B	SC4123	90° Anchor Plate	(2)	Each	11.76	-	-
C	SCR02	#8 x 1/4" Truss Head Screw	(26)	Each	0.43	0.43	-
D	SCX504	Header	(2)	Cut to Size	71.02	79.59	96.85
E	SCX508	Wall Jamb	(2)	Cut to Size	53.24	69.16	82.11
F	SC4106	Plastic Wall Anchor	(6)	Each	0.29	-	-
G	SCR10	#8 x 1 1/2" Truss Head Screw	(6)	Each	0.43	0.43	-
H	SCV221	Plastic Setting Block	(2)	Each	0.72	-	-
I	SC69570	3" Latch with Vinyl (SCV294)	(1)	Cut to Size	39.60	47.30	55.00
J	CELPD-006	Handle Assembly	(1)	Each	56.00	58.00 (BN) 73.00 (OR)	78.00 108.00 (BG)
K	SCX513	90° Corner Post	(1)	Cut to Size	78.57	107.56	112.68
L	SCX511	180° Post	(2)	Cut to Size	62.98	86.79	100.20
M	SCX649	Continuous Hinge Jamb	(1)	Cut to Size	72.24	83.13	98.07
N	SCX506	Snap-in Filler	(2)	Cut to Size	34.79	41.39	45.53
P	SCX1452	Strike Jamb w/ Vinyl & Magnet	(1)	Each	100.00	125.00	200.00
Q	SCV351	Clear Bottom Sweep	(1)	Cut to Size	5.50	-	-
T	SCX651	Continuous Hinge Rail	(1)	Cut to Size	73.68	85.63	115.52
GG	SCV219	Vertical Glazing Vinyl	(8)	Per Ft.	1.18	-	-
HH	SCV220	Horizontal Glazing Vinyl	(8)	Per Ft.	1.29	-	-
	SCV314-84	Strike Jamb Vinyl		Each	6.00	-	-
	PPINF02	Parts Pak for Infinity Units		Each	38.50	42.52	51.70
	SCV308	Door Glazing Vinyl 1/4" Glass *(f/ part T)*		Per Ft.	1.12	-	-
	SC4030	Magnet for Strike Jamb		Each	19.99	-	-
	SC4643	Mount Bushings *(f/ parts M & T)*	(2)	Each	2.93	-	-
	SC4642	Hinge Bushings *(f/ parts M & T)*	(2)	Each	6.53	-	-
	SC4644	Spacer Sleeve *(f/ parts M & T)*	(1)	Each	5.34	-	-
	SCR5018	Screws f/ Mount Bushings *(f/ parts M & T)*	(2)	Each	0.44	-	-
	SCX543*	Curb Filler		Cut to Size	59.00	69.00	88.00
	SCX553*	1/2" Wall Filler		Cut to Size	43.00	53.00	72.00
	SCX590*	1" Wall Filler - Wall Jamb		Cut to Size	68.00	77.00	96.00

***Please specify taper if needed and add $45.00 (SCTAPERCHARGE).**

Finish Selections (Code)

Chrome (SV)	Brushed Nickel (BN), Oil Rubbed Bronze (OR)	Bronze (BR), Brushed Bronze (BB), Brushed Gold (BG) Satin Nickel (SN), White (WP), Matte Black (WI)

Return Configurations

Door, Inline Panel & Return Panel

Semi-Frameless Infinity (1415NP)

To insure correct fit when ordering cut to size parts, please indicate complete original unit number.

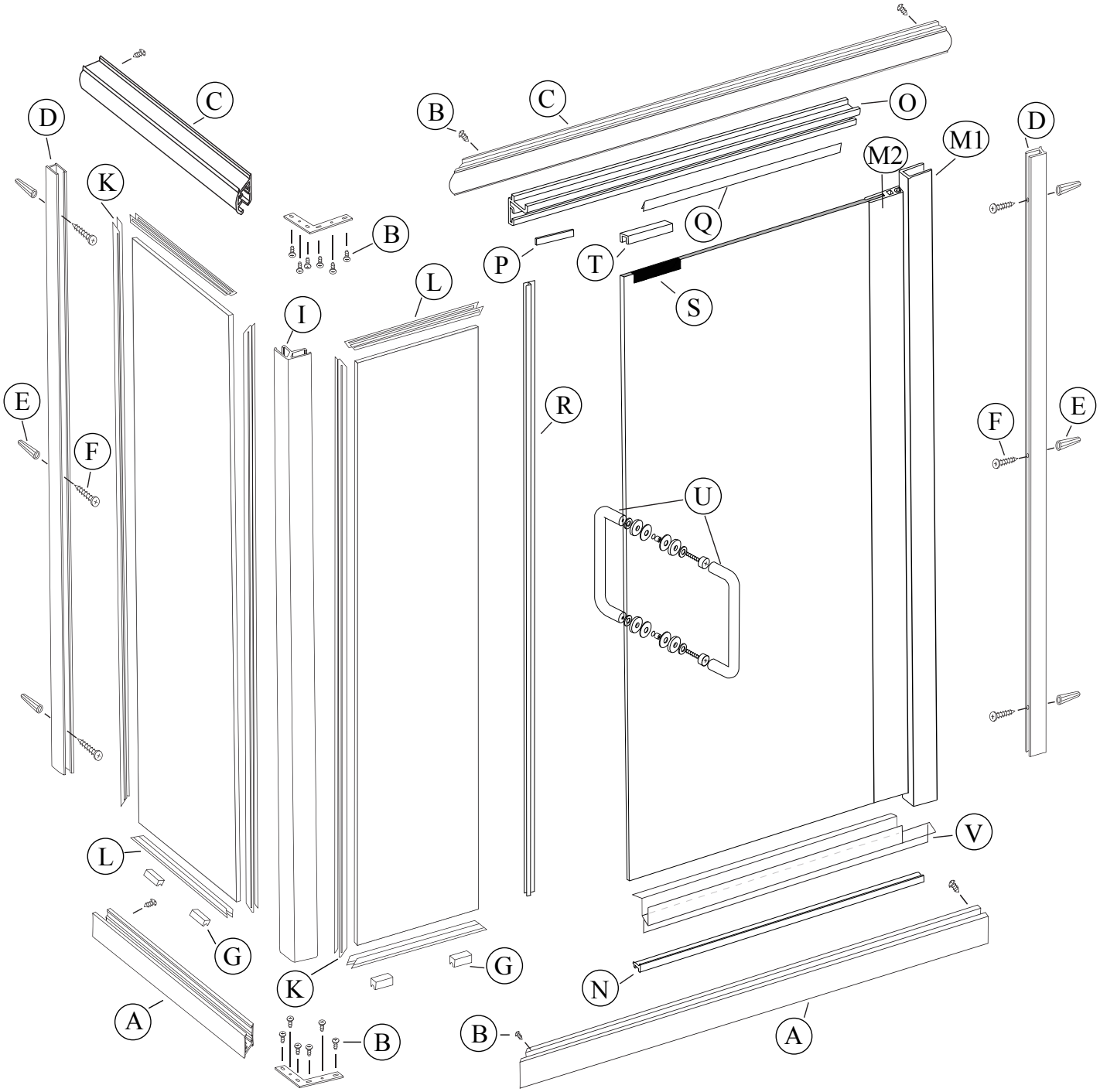

Notes

PPINF02 Parts Pak Includes: Letters E, F, G, S, T
Fillers for out of plumb conditions:
SC553* for walls (vertical). SC543* for threshold (horizontal).

Door, Inline Panel & Return Panel

Semi-Frameless Infinity (1415NP)

1415NP Continuous Hinge Parts Listing

Part Letter	Part Number	Description	Qty/Unit	Length/Each	Chrome *(SV)*	Brushed Nickel *(BN)*, Oil Rubbed Bronze *(OR)*	All other finishes *(see below)*
A	SCX505B	Curb	(2)	Cut to Size	64.35	72.91	90.18
	SC4123	90° Anchor Plate	(2)	Each	11.76	-	-
B	SCR02	#8 x 1/4" Truss Head Screw	(26)	Each	0.43	0.43	-
C	SCX504	Header	(2)	Cut to Size	71.02	79.59	96.85
D	SCX508	Wall Jamb	(2)	Cut to Size	53.24	69.16	82.11
E	SC4106	Plastic Wall Anchor	(6)	Each	0.29	-	-
F	SCR10	#8 x 1 1/2" Truss Head Screw	(6)	Each	0.43	0.43	-
G	SCV221	Plastic Setting Block	(2)	Each	0.72	-	-
I	SCX513	90° Corner Post	(1)	Cut to Size	78.57	107.56	112.68
K	SCV219	Vertical Glazing Vinyl	(8)	Per Ft.	1.18	-	-
L	SCV220	Horizontal Glazing Vinyl	(8)	Per Ft.	1.29	-	-
M1	SCX649	Continuous Hinge Jamb	(1)	Cut to Size	72.24	83.13	98.07
M2	SCX651	Continuous Hinge Rail	(1)	Cut to Size	73.68	85.63	115.52
N	SCX506	Snap-in Filler	(1)	Cut to Size	34.79	41.39	45.53
O	SCX509	Snap-In Fill	(1)	Cut to Size	32.69	51.28	64.70
P	SC4030	Magnet	(1)	Each	19.99	-	-
Q	SCV314-84	Strike Jamb Vinyl	(1)	Each	6.00	-	-
R	SCV908	Strike Vinyl	(1)	Each	48.40	-	-
T	SC69570	3" Latch with Vinyl (S - SCV294)	(1)	Cut to Size	39.60	47.30	55.00
U	CELPD-006	Handle Assembly	(1)	Each	56.00	58.00 (BN) 73.00 (OR)	78.00 108.00 (BG)
V	SCV351	Clear Bottom Sweep	(1)	Cut to Size	5.50	-	-
	PPINF02	Parts Pak for Infinity Units		Each	38.50	42.52	51.70
	SCV308	Door Glazing Vinyl 1/4" Glass *(f/ part M2)*		Per Ft.	1.12	-	-
	SC4643	Mount Bushings *(f/ parts M1 & M2)*	(2)	Each	2.93	-	-
	SC4642	Hinge Bushings *(f/ parts M1 & M2)*	(2)	Each	6.53	-	-
	SC4644	Spacer Sleeve *(f/ parts M1 & M2)*	(1)	Each	5.34	-	-
	SCR5018	Screws f/ Mount Bushings *(f/ M1 & M2)*	(2)	Each	0.44	-	-
	SCX543*	Curb Filler		Cut to Size	59.00	69.00	88.00
	SCX553*	1/2" Wall Filler		Cut to Size	43.00	53.00	72.00
	SCX590*	1" Wall Filler - Wall Jamb		Cut to Size	68.00	77.00	96.00

***Please specify taper if needed and add $45.00 (SCTAPERCHARGE).**

Finish Selections (Code)

Chrome (SV)	Brushed Nickel (BN), Oil Rubbed Bronze (OR)	Bronze (BR), Brushed Bronze (BB), Satin Nickel (SN), White (WP), Matte Black (WI)

Return Configurations

Door, Inline Panel & Return Panel

Framed Deluxe (150)

Model # 150HI/750HI prior to Jan. 2018

Please refer to pages 98-99 for Legacy pivot hinge model.

To insure correct fit when ordering cut to size parts, please indicate complete original unit number.

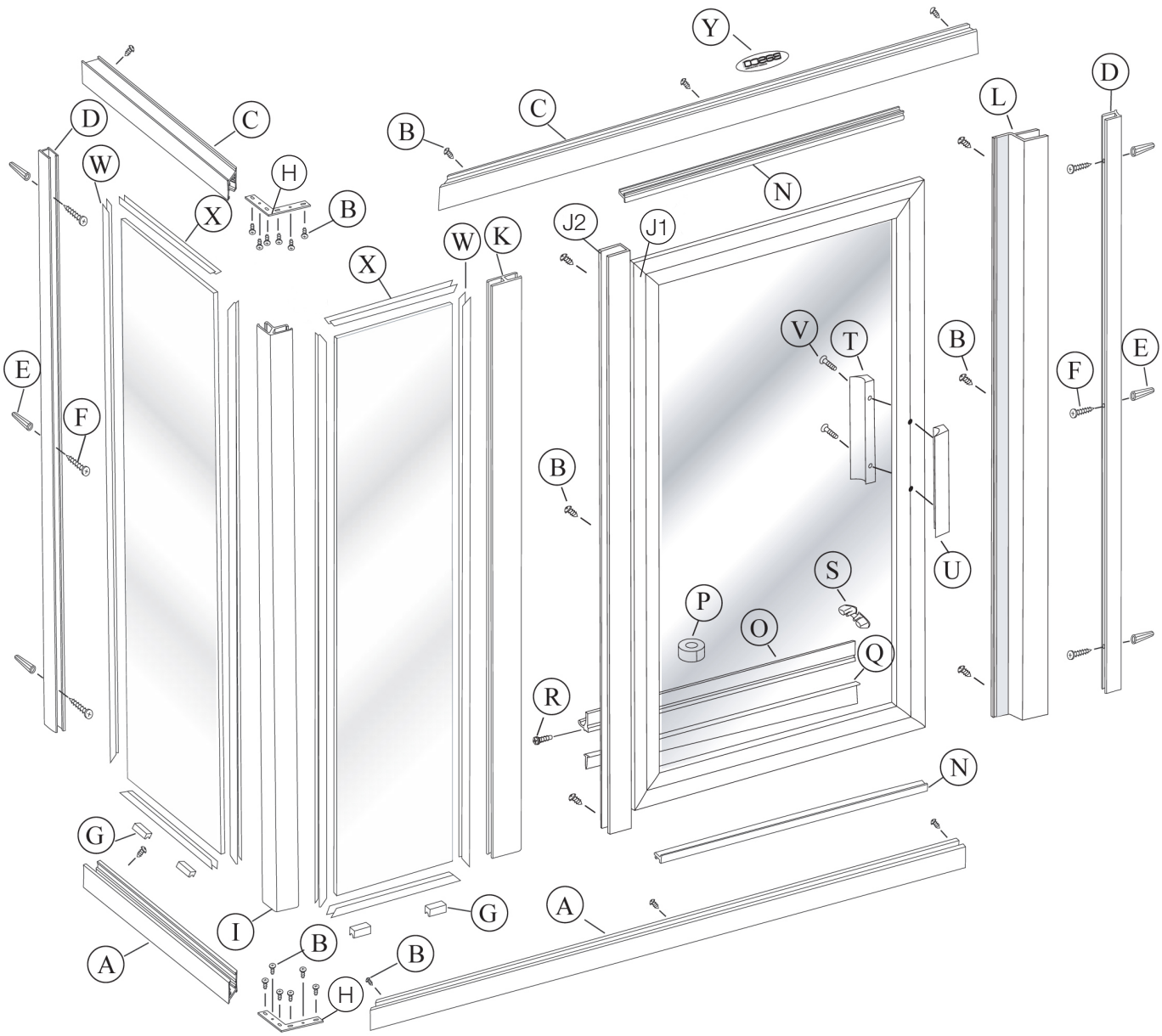

Notes

PPDLX02 Parts Pak Includes: Letters: B, E, F, G, P, R, S, T, U, V
Fillers for out of plumb conditions:
SC553* for walls (vertical). SC543* for threshold (horizontal).

Door, Inline Panel & Return Panel

Framed Deluxe (150)

Model # 150HI/750HI prior to Jan. 2018

Please refer to pages 98-99 for Legacy pivot hinge model.

150 Continuous Hinge Parts Listing

Part Letter	Part Number	Description	Qty/Unit	Length/Each	Chrome *(SV)*	Brushed Nickel *(BN)*, Oil Rubbed Bronze *(OR)*	All other finishes *(see below)*
A	SCX505B	Curb	(2)	Cut to Size	64.35	72.91	90.18
B	SCR02	#8 x 1/4" Truss Head Screw	(26)	Each	0.43	0.43	-
C	SCX505	Header	(2)	Cut to Size	57.35	67.13	85.60
D	SCX508	Wall Jamb	(2)	Cut to Size	53.24	69.16	82.11
E	SC4106	Plastic Wall Anchor	(6)	Each	0.29	-	-
F	SCR10	#8 x 1 1/2" Truss Head Screw	(6)	Each	0.43	0.43	-
G	SCV221	Plastic Setting Block	(4)	Each	0.72	-	-
H	SC4123	90° Anchor Plate	(2)	Each	11.76	-	-
I	SCX513	90° Corner Post	(1)	Cut to Size	78.57	107.56	112.68
J1	SCX648	Continuous Hinge Rail	(1)	Cut to Size	44.75	62.17	66.77
J2	SCX649	Continuous Hinge Jamb	(1)	Cut to Size	72.24	83.13	98.07
K	SCX511	180° Post	(1)	Cut to Size	62.98	86.79	100.20
L	SCX522	Strike Jamb w/SCV253 (Magnet)	(1)	Cut to Size	73.50	95.24	124.05
N	SCX506	Snap-n-Filler (no holes)	(2)	Cut to Size	34.79	41.39	45.53
O	SCX589	Drip Rail	(1)	Cut to Size	33.73	40.03	44.03
P	SC4248	Two Faced Tape	(1)	Each	3.89	-	-
Q	SCV284	Tapered Drip Vinyl (37" pc.)	(1)	Each	3.51	-	-
R	SCR11	#6 x 3/8" Truss Head Screw	(1)	Each	0.43	-	-
S	SC4000	Drip Plug	(1)	Each	0.47	-	-
T U	SC3317**	5" Exterior & Interior Handle	(1 Set)	Each	24.86	39.18	46.27
V	SCR06	#6 x 1 1/4" Handle Screw	(2)	Each	0.43	-	-
W	SCV226	Vertical Glazing Vinyl (3/16" Glass)	(4)	Per Ft.	1.02	-	-
X	SCV225	Horizontal Glazing Vinyl (3/16" Glass)	(4)	Per Ft.	1.12	-	-
Y	BAS-NP	Basco Name Plate	(1)	Each	1.10	-	-
	SCX549	Strike Side Rail w/ Magnet (SCV253)	(1)	Cut to Size	76.71	91.52	107.68
	SC4643	Mount Bushings *(f/ parts J1 & J2)*	(2)	Each	2.93	-	-
	SC4642	Hinge Bushings *(f/ parts J1 & J2)*	(2)	Each	6.53	-	-
	SC4644	Spacer Sleeve *(f/ parts J1 & J2)*	(1)	Each	5.34	-	-
	SC4609	Door Bushings	(2)	Each	2.93	-	-
	PPDLX02	Deluxe Door/Panel Parts Pak		Each	35.78	45.95	52.28
	SCX543*	Curb Filler		Cut to Size	59.00	69.00	88.00
	SCX553*	1/2" Wall Filler		Cut to Size	43.00	53.00	72.00

***Please specify taper if needed and add $45.00 (SCTAPERCHARGE). ** 3 1/2" Hole-to-Hole Handle dimension.**

Finish Selections (Code)

Chrome (SV)	Brushed Nickel (BN), Oil Rubbed Bronze (OR)	Bronze (BR), Satin Nickel (SN), White (WP), Matte Black (WI)

Neo Angle Configurations

Neo Angle

Semi-Frameless Infinity (1416)

To insure correct fit when ordering cut to size parts, please indicate complete original unit number.

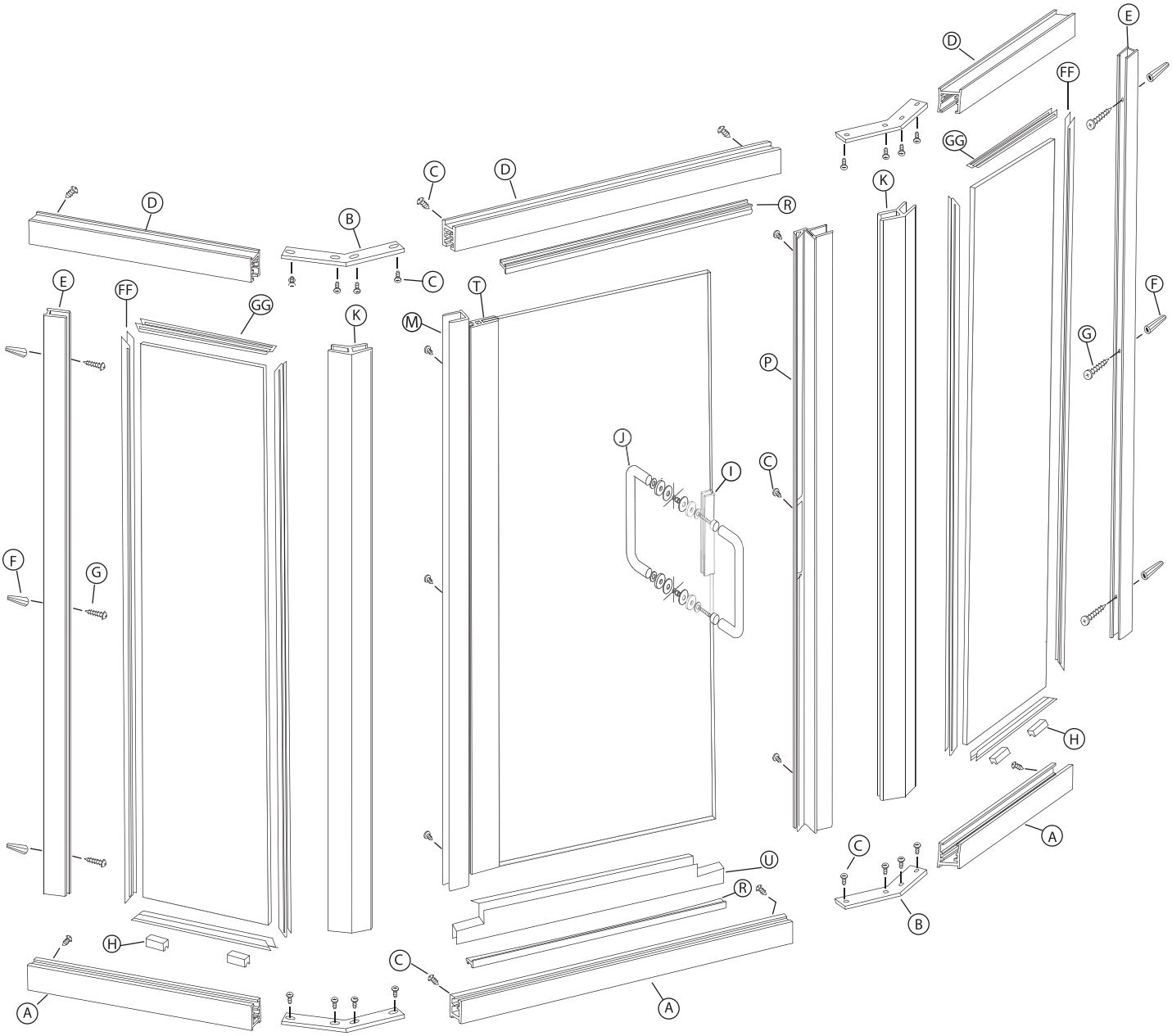

Notes

PPINF02 Parts Pak Includes: Letters C, F, G, H, I
Fillers for out of plumb conditions:
SC553* for walls (vertical). SC543* for threshold (horizontal).

1416 Continuous Hinge Parts Listing

Part Letter	Part Number	Description	Qty/Unit	Length/Each	Chrome *(SV)*	Brushed Nickel *(BN)*, Oil Rubbed Bronze *(OR)*	All other finishes *(see below)*
A	SCX505B	Curb	(3)	Cut to Size	64.35	72.91	90.18
B	SC4124	135° Anchor Plate	(4)	Each	6.60	-	-
C	SCR02	#8 x 1/4" Truss Head Screw	(40)	Each	0.43	0.43	-
D	SCX504	Header	(3)	Cut to Size	71.02	79.59	96.85
E	SCX508	Wall Jamb	(2)	Cut to Size	53.24	69.16	82.11
F	SC4106	Plastic Wall Anchor	(6)	Each	0.29	-	-
G	SCR10	#8 x 1 1/2" Truss Head Screw	(6)	Each	0.43	0.43	-
H	SCV221	Plastic Setting Block	(4)	Each	0.72	-	-
I	SC69570	3" Latch with Vinyl (SCV294)	(1)	Cut to Size	39.60	47.30	55.00
J	CELPD-006	Handle Assembly	(1)	Each	56.00	58.00 (BN) 73.00 (OR)	78.00
K	SCX512	135° Post	(2)	Cut to Size	72.35	87.89	96.97
M	SCX649	Continuous Hinge Jamb	(1)	Cut to Size	72.24	83.13	98.07
N	SCX506	Snap-in Filler	(2)	Cut to Size	34.79	41.39	45.53
P	SCX1452	Strike Jamb w/ Vinyl & Magnet	(1)	Each	100.00	125.00	200.00
Q	SCV351	Clear Bottom Sweep	(1)	Cut to Size	5.50	-	-
T	SCX651	Continuous Hinge Rail	(1)	Cut to Size	73.68	85.63	115.52
FF	SCV219	Vertical Glazing Vinyl	(8)	Per Ft.	1.18	-	-
GG	SCV220	Horizontal Glazing Vinyl	(8)	Per Ft.	1.29	-	-
	SCV314-84	Strike Jamb Vinyl		Each	6.00	-	-
	PPINF02	Parts Pak for Infinity Units		Each	38.50	42.52	51.70
	SCV308	Door Glazing Vinyl 1/4" Glass *(f/ part T)*		Per Ft.	1.12	-	-
	SC4030	Magnet for Strike Jamb		Each	19.99	-	-
	SC4643	Mount Bushings *(f/ parts M & T)*	(2)	Each	2.93	-	-
	SC4642	Hinge Bushings *(f/ parts M & T)*	(2)	Each	6.53	-	-
	SC4644	Spacer Sleeve *(f/ parts M & T)*	(1)	Each	5.34	-	-
	SCR5018	Screws f/ Mount Bushings *(f/ parts M & T)*	(2)	Each	0.44	-	-
	SCX543*	Curb Filler		Cut to Size	59.00	69.00	88.00
	SCX553*	1/2" Wall Filler		Cut to Size	43.00	53.00	72.00
	SCX590*	1" Wall Filler - Wall Jamb		Cut to Size	68.00	77.00	96.00

***Please specify taper if needed and add $45.00 (SCTAPERCHARGE).**

Finish Selections (Code)

Chrome (SV)	Brushed Nickel (BN), Oil Rubbed Bronze (OR)	Bronze (BR), Brushed Bronze (BB), Satin Nickel (SN), White (WP), Matte Black (WI)

Neo Angle Configurations

Neo Angle

Framed Deluxe (160)

Model # 160HI/760HI prior to Jan. 2018

Please refer to pages 102-103 for Legacy pivot hinge model and pages 104-105 for 160QNS pivot hinge model.

To insure correct fit when ordering cut to size parts, please indicate complete original unit number.

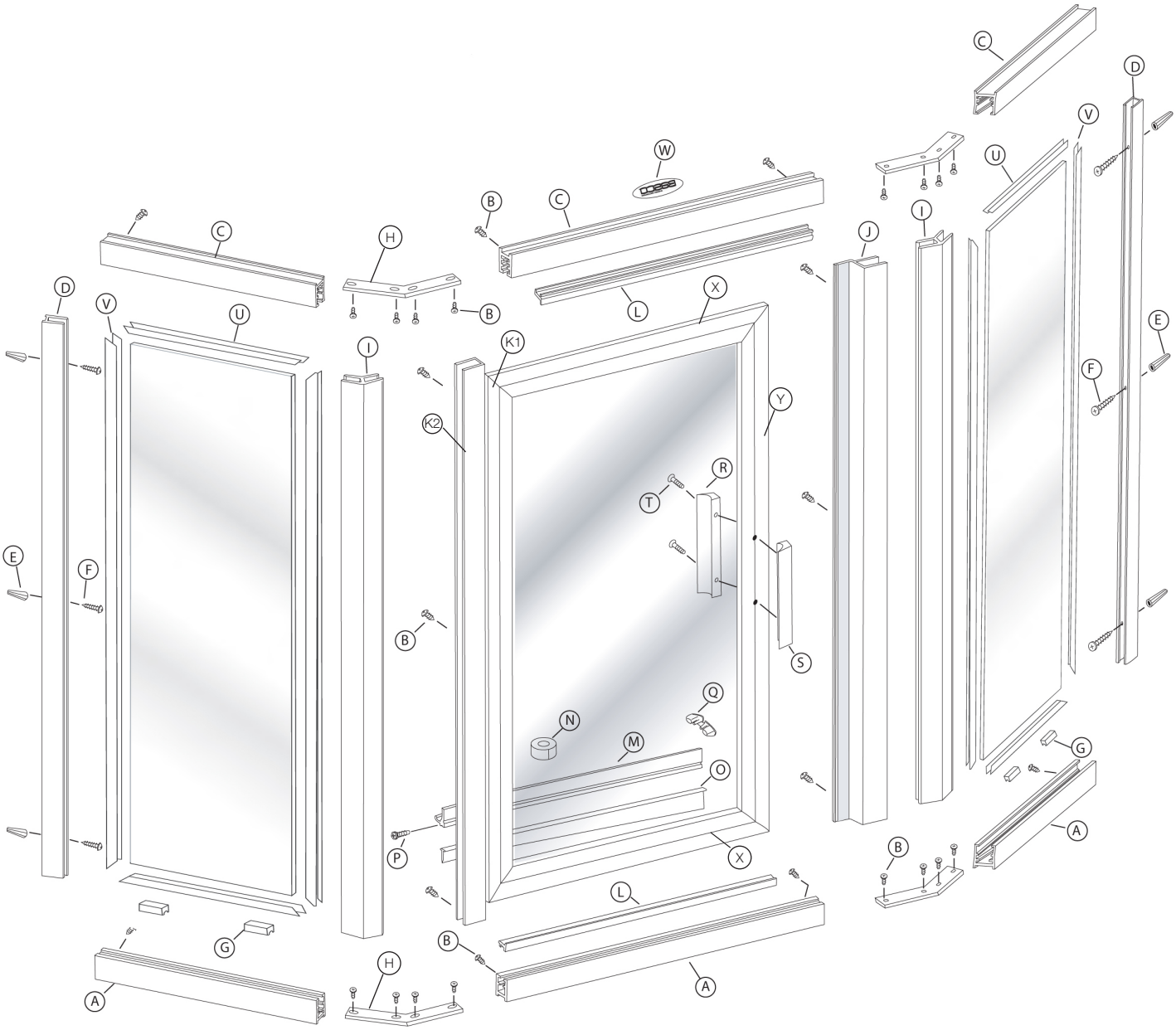

Notes

PPDLX02 Parts Pak Includes: Letters B, E, F, G, M, N, Q, R, S, T
Fillers for out of plumb conditions:
SC553* for walls (vertical). SC543* for threshold (horizontal).

Neo Angle

Framed Deluxe (160)

Model # 160HI/760HI prior to Jan. 2018

Please refer to pages 102-103 for Legacy pivot hinge model and pages 104-105 for 160QNS pivot hinge model.

160 Continuous Hinge Parts Listing

Part Letter	Part Number	Description	Qty/Unit	Length/Each	Chrome *(SV)*	Brushed Nickel *(BN)*, Oil Rubbed Bronze *(OR)*	All other finishes *(see below)*
A	SCX505B	Curb	(3)	Cut to Size	64.35	72.91	90.18
B	SCR02	#8 x 1/4" Truss Head Screw	(26)	Each	0.43	0.43	-
C	SCX505	Header	(3)	Cut to Size	57.35	67.13	85.60
D	SCX508	Wall Jamb	(2)	Cut to Size	53.24	69.16	82.11
E	SC4106	Plastic Wall Anchor	(6)	Each	0.29	-	-
F	SCR10	#8 x 1 1/2" Truss Head Screw	(6)	Each	0.43	0.43	-
G	SCV221	Plastic Setting Block	(4)	Each	0.72	-	-
H	SC4124	135° Anchor Plate	(4)	Each	6.60	-	-
I	SCX512	135° Post	(2)	Cut to Size	72.35	87.89	96.97
J	SCX522	Strike Jamb w/SCV253 (Magnet)	(1)	Cut to Size	73.50	95.24	124.05
K1	SCX649	Continuous Hinge Jamb	(1)	Cut to Size	72.24	83.13	98.07
K2	SCX648	Continuous Hinge Rail	(1)	Cut to Size	44.75	62.17	66.77
L	SCX506	Snap-n-Filler (no holes)	(2)	Cut to Size	34.79	41.39	45.53
M	SCX589	Drip Rail	(1)	Cut to Size	33.73	40.03	44.03
N	SC4248	Two Faced Tape	(1)	Each	3.89	-	-
O	SCV284	Tapered Drip Vinyl (37" pc.)	(1)	Each	3.51	-	-
P	SCR11	#6 x 3/8" Truss Head Screw	(1)	Each	0.43	-	-
Q	SC4000	Drip Plug	(1)	Each	0.47	-	-
R S	SC3317**	5" Exterior & Interior Handle	(1 Set)	Each	24.86	39.18	46.27
T	SCR06	#6 x 1 1/4" Handle Screw	(2)	Each	0.43	-	-
U	SCV225	Horizontal Glazing Vinyl (3/16" Glass)	(4)	Per Ft.	1.12	-	-
V	SCV226	Vertical Glazing Vinyl (3/16" Glass)	(4)	Per Ft.	1.02	-	-
W	BAS-NP	Basco Name Plate	(1)	Each	1.10	-	-
X	SCX899	Top or Bottom Door Rail	(2)	Cut to Size	49.45	67.08	73.80
Y	SCX549	Strike Side Rail w/ Magnet (SCV253)	(1)	Cut to Size	76.71	91.52	107.68
	PPDLX02	Deluxe Door/Panel Parts Pak		Each	35.78	45.95	52.28
	SC4643	Mount Bushings *(f/ parts K1 & K2)*	(2)	Each	2.93	-	-
	SC4642	Hinge Bushings *(f/ parts K1 & K2)*	(2)	Each	6.53	-	-
	SC4644	Spacer Sleeve *(f/ parts K1 & K2)*	(1)	Each	5.34	-	-
	SC4609	Door Bushings	(2)	Each	2.93	-	-
	SCX543*	Curb Filler		Cut to Size	59.00	69.00	88.00
	SCX553*	1/2" Wall Filler		Cut to Size	43.00	53.00	72.00

***Please specify taper if needed and add $45.00 (SCTAPERCHARGE). ** 3 1/2" Hole-to-Hole Handle dimension.**

Finish Selections (Code)

Chrome (SV)	Brushed Nickel (BN), Oil Rubbed Bronze (OR)	Bronze (BR), Satin Nickel (SN), White (WP), Matte Black (WI)

Additional

Part Number	Description	Length/Each	Chrome *(SV)*	Brushed Nickel *(BN)*, Oil Rubbed Bronze *(OR)*	All other finishes *(see below)*
SC455	Parts Box	Each	68.20	-	-
SCPTAP	Almond Paint Touch-up Kit	Each	-	-	13.20
SCPTQP	Antique Pewter Paint Touch-up Kit	Each	-	-	13.20
SCPTBR	Bronze Paint Touch-up Kit	Each	-	-	13.20
SCPTCU	Burnished Copper Paint Touch-up Kit	Each	-	-	13.20
SCPTOR	Oil Rubbed Bronze Paint Touch-up Kit	Each	-	-	13.20
SCPTSN	Satin Nickel Paint Touch-up Kit	Each	-	-	13.20
SCPTWP	White Paint Touch-up Kit	Each	-	-	13.20
SCPTWI	Matte Black Paint Touch-up Kit	Each	-	-	13.20
SC6000	Drip Assembly Kit for Framed Continuous Hinge Doors. Includes Drip Rail, Drip Vinyl, Two Faced Tape and Plug.	Each	34.68	44.03	49.37
SCA7395	5-piece towel bar assembly with back plates for 4400/4500 model	Each	98.05	106.90	135.45

Finish Selections (Code)

Chrome (SV)	Brushed Nickel (BN) Oil Rubbed Bronze (OR)	Bronze (BR), Brushed Bronze (BB), Brushed Gold (BG) Satin Nickel (SN), White (WP), Matte Black (WI)

Discontinued & Legacy Models

Some parts may no longer be available.

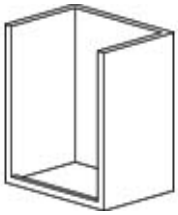

Inline Configurations

Bypass Models
Semi-Frameless Tub/Shower *(3400/3500 Classic)*.....60 - 61
Framed Tub/Shower *(2150/3150 Supreme)*..... 62 - 63

Single Swing Models
Semi-Frameless Bifold *(1411 Infinity)* .....64 - 65
Framed Bifold *(1100 Deluxe)*.....66 - 67
Framed *(100/200/500 Deluxe Pivot Hinge)* .....68 - 69
Framed (335 Deluxe Continuous Hinge).....70 - 71
Framed *(335 Deluxe Pivot Hinge)*.....72 - 73
Semi-Frameless (3600 Classic Continuous Hinge) .....74 - 75
Semi-Frameless *(3600 Classic Pivot Hinge)* .....76 - 77

Swing Door & Panel(s) Models
Semi-Frameless Panel/Door/Panel *(126 Classic Continuous Hinge)*.....78 - 79
Semi-Frameless Panel/Door/Panel *(126/726 Classic Pivot Hinge)*.....80 - 81
Framed Panel/Door/Panel *(125/725 Deluxe Pivot Hinge)* .....82 - 83
Semi-Frameless Door & Inline Panel *(136 Classic Continuous Hinge)*.....84 - 85
Semi-Frameless Door & Inline Panel *(136/736 Classic Pivot Hinge)*.....86 - 87
Framed Door & Inline Panel *(135/735 Deluxe Pivot Hinge)* .....88 - 89

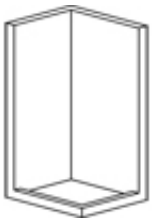

Return Panel Configuratio

Swing Door & Panel(s) Models
Semi-Frameless Door & Return Panel *(146 Classic Continuous Hinge)* .....90 - 91
Semi-Frameless Door & Return Panel *(146/746 Classic Pivot Hinge)* .....92 - 93
Framed Door & Return Panel *(145/745 Deluxe Pivot Hinge)*.....94 - 95
Semi-Frameless Door, Inline Panel & Return Panel *(151 Classic Continuous Hinge)*... 96 - 97
Semi-Frameless Door, Inline Panel & Return Panel *(151/751 Classic Pivot Hinge)*..... 98 - 99
Framed Door, Inline Panel & Return Panel *(150/750 Deluxe Pivot Hinge)*.....100 - 101

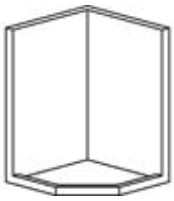

Neo Angle Configurations

Swing Door & Panel(s) Models
Semi-Frameless Neo Angle *(161 Classic Continuous Hinge)*.....102 - 103
Semi-Frameless Neo Angle *(161/761 Classic Pivot Hinge)*.....104 - 105
Framed Neo Angle *(160/760 Deluxe Pivot Hinge)* .....106 - 107
Framed Quick-N-Stall Neo Angle *(160QNS Deluxe Pivot Hinge)* .....108 - 109

Inline Configurations

Bypass **Tub/Shower**

Semi-Frameless Classic - Discontinued Models (3400/3500)

To insure correct fit when ordering cut to size parts, please indicate complete original unit number.

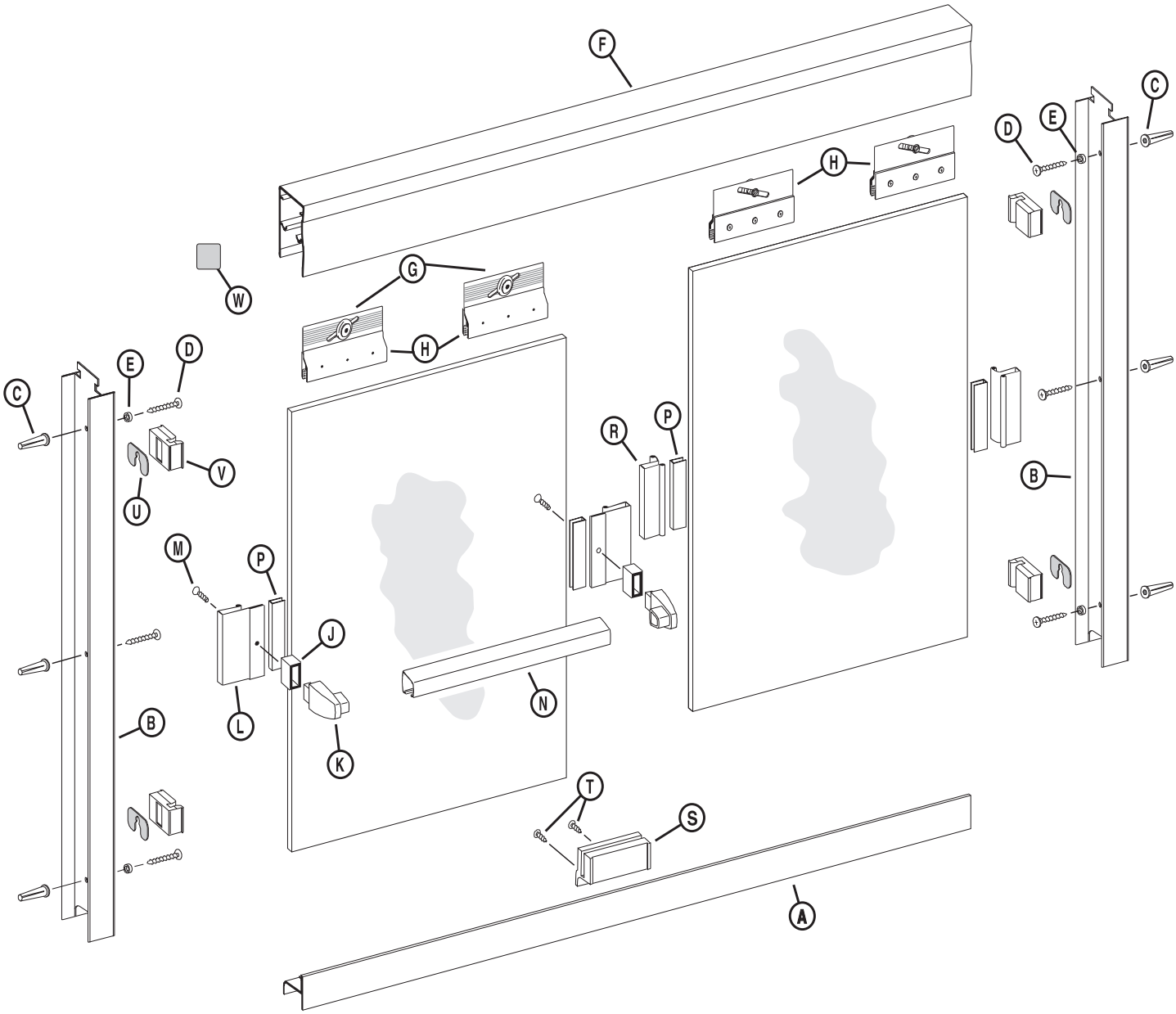

Notes

PPCLC51 Parts Pak Includes:
Letters C, D, E, J, K, L, M, P, R, S, T, U, V

SC7282 Towel Bar Assembly Includes:
Letters (2 ea - J, K, L, M, P), (1 ea - N)

3400/3500 are provided with one towel bar assembly as shown. Please specify complete unit number when purchasing an additional assembly.

Fillers for out of plumb conditions:

SC907* for tub/shower (horizontal).
SC850* for walls (vertical).

3400/3500 Parts Listing

Part Letter	Part Number	Description	Qty/Unit	Length/Each	Chrome *(SV)*	Brushed Nickel *(BN)*, Oil Rubbed Bronze *(OR)*	All other finishes *(see below)*
A	SCX556	Tub Track *(does not include silencer SCV191-60)*	(1)	Cut to Size	65.40	73.87	-
	SCV191-60	Tub Track Insert (60" length)	(1)	Each	8.42	-	-
B	SCX896	Wall Jamb	(2)	Cut to Size	72.77	81.24	-
C	SC4106	Plastic Wall Anchor	(6)	Each	0.29	-	-
D	SCR10	#8 x 1½" Truss Head Screw	(6)	Each	0.43	0.43	-
E	SC4012	Nylon Spacer	(4)	Each	0.43	-	-
F	SCX917	Header	(1)	Cut to Size	194.29	226.50	-
G	SC4082	Roller	(4)	Each	1.54	-	-
	SCR44	8 x ⅜" Hex Head Roller Screw	(4)	Each	0.43	-	-
H	SC8239	Hanger Bracket	(4)	Each	11.92	12.65	-
J	SC4130	Towel Bar Trim Ring	(2)	Each	1.69	2.37	-
K	SC4125	Acrylic Towel Bar Bracket	(2)	Each	4.40	-	-
L	SC128	Towel Bar Base	(2)	Each	4.50	5.73	-
M	SCR20	#10 x ½" Flat Head Screw	(2)	Each	0.43	-	-
N	SCX805	Towel Bar	(1)	Cut to Size	38.16	49.04	-
P	SCV294	Vinyl Shim	(4)	Each	4.02	-	-
R	SC4129	Pull Handle	(2)	Each	4.00	6.72	-
S	SC4049	Nylon Bottom Guide	(1)	Each	3.28	-	-
T	SCR11	#6 x ⅜" Pan Head Screw	(5)	Each	0.43	0.43	-
U	SC4011	Stainless Bumper Insert	(4)	Each	2.67	-	-
V	SC4020	Soft Jamb Bumper	(4)	Each	2.20	-	-
W	BAS-NP	Basco Name Plate	(1)	Each	1.10	-	-
	SC4340-35	Anti-Jump Clip	(1)	Set of 3	15.02	-	-
	PPCLC51	Parts Pak for 3400 or 3500		Each	49.01	55.80	-
	SC7282	Towel Bar Assembly		Each	61.72	72.72	-
	SCX907*	Tub/Curb Filler		Cut to Size	72.00	82.00	-
	SCX850*	Wall Filler		Cut to Size	71.00	81.00	-

***Please specify taper if needed and add $45.00 (SCTAPERCHARGE).**

Finish Selections (Code)

Chrome (SV)	Brushed Nickel (BN), Oil Rubbed Bronze (OR)

Inline Configurations

Bypass **Tub/Shower**

Framed Supreme - Discontinued Model (2150/3150)

To insure correct fit when ordering cut to size parts, please indicate complete original unit number.

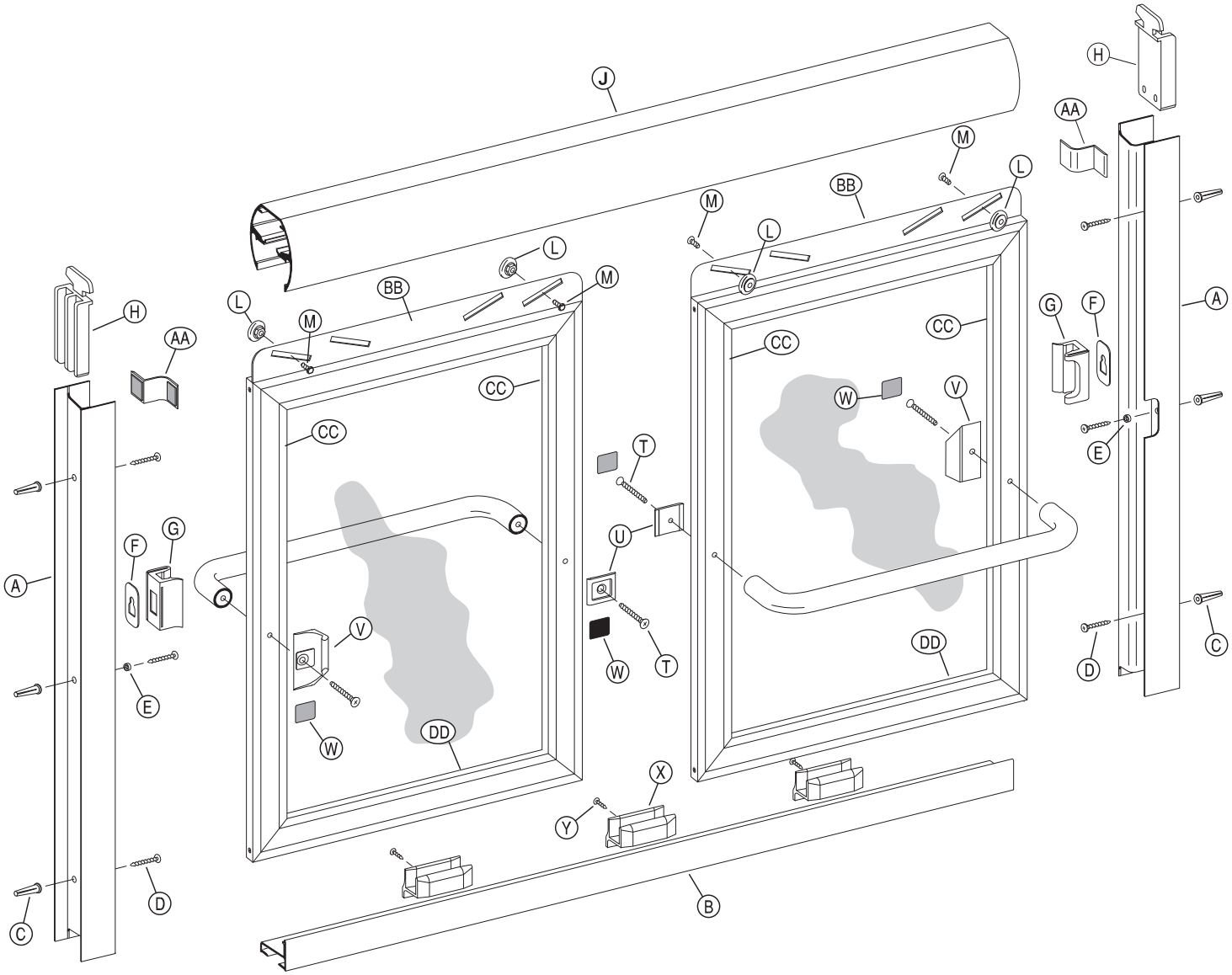

Notes

SC2150PP Parts Pak Includes: Letters C, D, E, F, G, H, L, M, T, U, V, W, X, Y, AA
Fillers for out of plumb conditions:
SC629* for tub/shower (horizontal). SC647* for walls (vertical).

2150/3150 Parts Listing

Part Letter	Part Number	Description	Qty/Unit	Length/Each	Chrome *(SV)*	Brushed Nickel *(BN)*, Oil Rubbed Bronze *(OR)*	All other finishes *(see below)*
A	SCX625	Wall Jamb — Specify for Left or Right Side	(2)	Cut to Size	92.42	117.83	133.56
B	SCX624	Tub Track	(1)	Cut to Size	86.97	112.38	128.11
C	SC4106	Plastic Wall Anchor	(6)	Each	0.29	-	-
D	SCR10	#8 x 1½" Truss Head Screw	(6)	Each	0.43	0.43	-
E	SC4012	Nylon Spacer	(2)	Each	0.43	-	-
F	SC4341	Stainless Steel Bumper Insert	(2)	Each	8.49	-	-
G	SC8319	Clear PVC Jamb Bumper	(2)	Each	4.16	-	-
H	SC4339	Nylon T-Lock	(2)	Each	3.61	-	-
J	SCX623	Header	(1)	Cut to Size	233.81	259.22	274.95
L	SC4357	Roller	(4)	Each	9.13	-	-
M	SCR44	#8 x ⅜" Hex Head Roller Screw	(4)	Each	0.43	-	-
T	SCR08	Screws for Towel Bar	(4)	Each	0.43	-	-
U	SC4359	Clear Towel Bar Cap	(2)	Each	10.64	-	-
V	SC4358	Finger Pull	(2)	Each	12.75	-	-
W	BAS-NP	Basco Name Plate	(1)	Each	1.10	-	-
X	SC4356	Bottom Guide	(3)	Each	10.64	-	-
Y	SCR11	#6 x ⅜" Pan Head Screw	(3)	Each	0.43	0.43	-
AA	SC4346	Nylon Jamb Cover Black	(2)	Each	7.59	-	-
BB	SCX626	Top Rail	(2)	Cut to Size	82.28	90.75	108.12
CC	SCX628	Side Rail	(4)	Cut to Size	69.54	83.58	91.94
DD	SCX627	Bottom Rail	(2)	Cut to Size	71.39	79.86	96.80
	SC2150PP	Parts Pak for 2150 or 3150		Each	64.90	-	-
	SC7395	5-pc Towel Bar Asmbly for framed unit		Each	78.05	86.90	115.45
	SCX629*	Tub/Curb Filler		Cut to Size	97.00	116.00	156.00
	SCX647*	Wall Filler		Cut to Size	95.00	114.00	153.00

***Please specify taper if needed and add $45.00 (SCTAPERCHARGE).**

Finish Selections (Code)

Chrome (SV)	Brushed Nickel (BN), Oil Rubbed Bronze (OR)	Bronze (BR), Satin Nickel (SN), White (WP), Matte Black (WI)

Inline Configurations

Bifold

1/4” Semi-Frameless Infinity (1411)

To insure correct fit when ordering cut to size parts, please indicate complete original unit number.

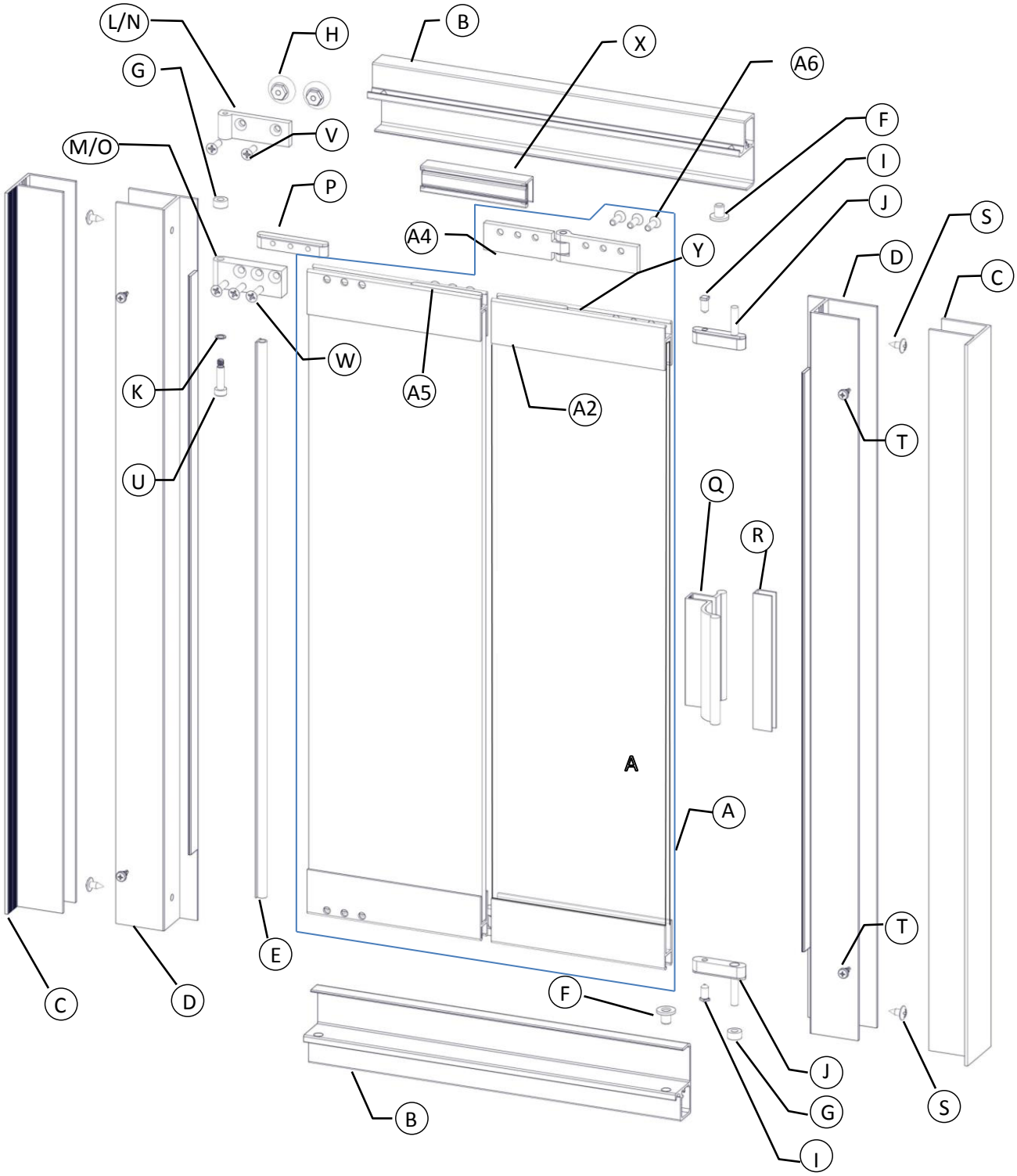

AS VIEWED FROM INSIDE OF UNIT

1411 Parts Listing

Part Letter	Part Number	Description	Qty/Unit	Length/Each	Chrome (SV)	Brushed Nickel (BN)
A	SP1411	Door Panel Assembly	(1)	Each	*Not Available*	
A2	SCX558	Rail	(4)	Cut to Size	39.45	55.03
A3	SCV57	Glazing Vinyl	(4)	Each	1.21	-
A4	SC8220	Center Hinge	(2)	Each	*Not Available*	
A5	SC4261	Nut Block	(4)	Each	*Not Available*	
A6	SCR73	#8-32 x 1/2” PH FH Screw	(12)	Each	0.43	0.43
B	SCX715	Header/Curb	(2)	Cut to Size	*Not Available*	
C	SCX713	Wall Jamb	(2)	Cut to Size	*Not Available*	
D	SCX714	Adjustable Jamb	(2)	Cut to Size	*Not Available*	
E	SCV927T2	Bulb Vinyl	(1)	Each	18.00	-
F	SC4160	Pivot Bushing	(2)	Each	0.88	-
G	SC4016	3/16” Spacer	(2)	Each	0.29	-
H	SC4357	Black Roller	(2)	Each	9.13	-
I	SC5080	Square Head Screw	(2)	Each	1.22	-
J	SC4252	Pivot Block	(2)	Each	11.12	-
K	SC4352	Plastic Bearing	(2)	Each	*Not Available*	
L	SC8230	Roller Bracket 1	(2)	Each	*Not Available*	
M	SC4260	Pivot Block Adapter 2	(1)	Each	*Not Available*	
N	SC8232	Roller Bracket 2	(1)	Each	*Not Available*	
O	SC4262	Pivot Block Adapter	(1)	Each	*Not Available*	
P	SC4261	Nut Block	(1)	Each	*Not Available*	
Q	SC3711	Handle	(1)	Each	*Not Available*	
R	SCV4123	Latch Vinyl	(1)	Each	1.21	-
S	SCR30	#8 x 3/8” Screw	(4)	Each	0.43	-
T	SCR24	#6 x 3/8” Screw	(4)	Each	0.43	-
U	SCR32	3/16” x 5/8” Shank Shoulder Screw	(1)	Each	*Not Available*	
V	SCR73	#8-32 x 1/2” PH FH Screw	(2)	Each	0.43	-
W	SCR33	#8-32 x 5/8” PH Screw	(3)	Each	*Not Available*	
X	SC784	Latch	(1)	Each	44.30	52.03
Y	SC4031	Magnet	(1)	Each	*Not Available*	
	PPINF52	1411 Parts Pak			*Not Available*	
	SCR10	#8 x 1 1/2” TH Screw	(6)	Each	0.43	0.43
	SC4106	Wall Plug	(6)	Each	0.29	-

Inline Configurations

Bifold

Framed Deluxe - Discontinued Model (1100)

To insure correct fit when ordering cut to size parts, please indicate complete original unit number.

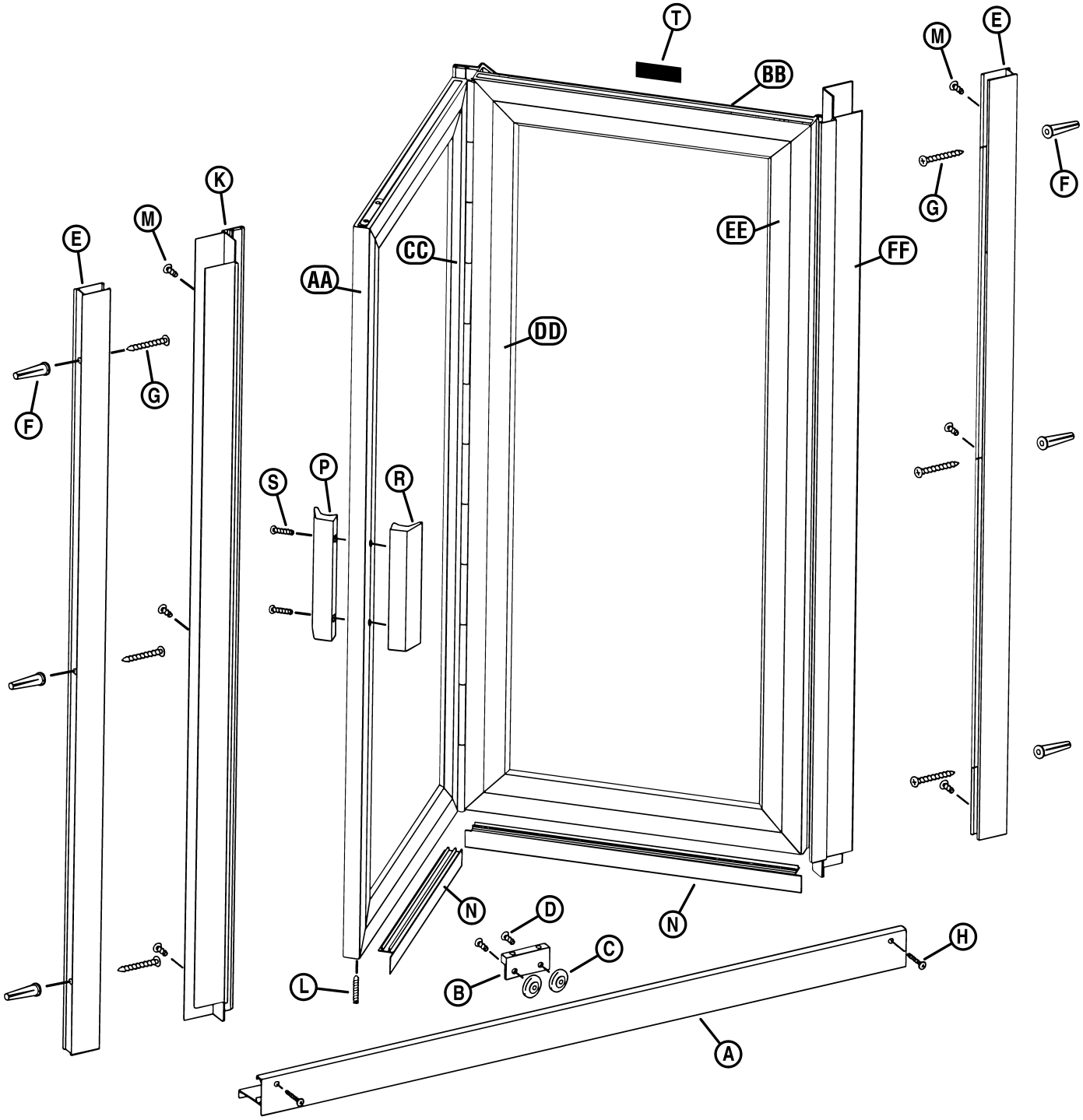

Notes

SC1100PP Parts Pak Includes:
Letters B, C, D, F, G, H, L, M, P, R, S

1100 Parts Listing

Part Letter	Part Number	Description	Qty/Unit	Length/Each	Chrome *(SV)*	Gold *(GD)*
A	SCX702	Roller Track	(1)	Cut to Size	61.37	73.61
B	SC7101	Roller Bracket	(1)	Each	11.72	12.83
C	SC4082	Nylon Roller Bearings	(2)	Each	1.54	-
D	SCR44	#8 x 3/8" Hex Head Roller Screw	(2)	Each	0.43	-
E	SCX508	Wall Jambs	(2)	Cut to Size	53.24	69.16
F	SC4106	Plastic Wall Anchor	(6)	Each	0.29	-
G	SCR10	#8 x 1 1/2" Truss Head Screw	(6)	Each	0.43	0.43
H	SCR35	#5 x 1/2" Truss Head Screw	(2)	Each	0.43	-
K	SCX522	Strike Jamb	(1)	Cut to Size	73.50	95.24
L	SCR5177	Headless Pivot Pin Screw	(1)	Each	0.43	-
M	SCR02	#8 x 1/4" Truss Head Screw	(6)	Each	0.43	-
N	*SCV270*	*Deflector*	*(2)*	*Each*	*Not Available*	
P R	SC3317**	5" Exterior & Interior Handle	(1 Set)	Each	24.86	39.18
S	SCR06	#6 x 1 1/4" Handle Screw	(2)	Each	0.43	0.43
T	SC4531	Basco Label	(1)	Each	1.02	-
AA	SCX549	Strike Rail	(1)	Cut to Size	76.71	91.52
BB	SCX899	Door Top & Bottom	(4)	Cut to Size	49.45	67.08
CC	SCX711	#2 Hinge Rail	(1)	Cut to Size	81.69	90.75
DD	SCX708	#3 Hinge Rail	(1)	Cut to Size	166.98	176.07
EE	SCX703	#4 Hinge Rail	(1)	Cut to Size	66.84	75.91
FF	*SCX706*	*Hinge Jamb*	*(1)*	*Cut to Size*	*Not Available*	
	SC1100PP	Parts Pak for 1100		Each	50.60	55.94
	SC712	Hinge Assembly Clips		Each	1.35	-
	SC709	Stainless Rod for SC712		Each	5.12	-
	SC4171	Pivot Block		Each	0.81	-
	SCX553*	1/2" Wall Filler		Cut to Size	43.00	53.00
	SCX907*	Curb Filler		Cut to Size	72.00	82.00

***Please specify taper if needed and add $45.00 (SCTAPERCHARGE).**
**** 3 1/2" Hole-to-Hole handle dimension.**

Inline Configurations

Single Swing

Framed Deluxe - Legacy Pivot Model (100, 200, 500)

To insure correct fit when ordering cut to size parts, please indicate complete original unit number.

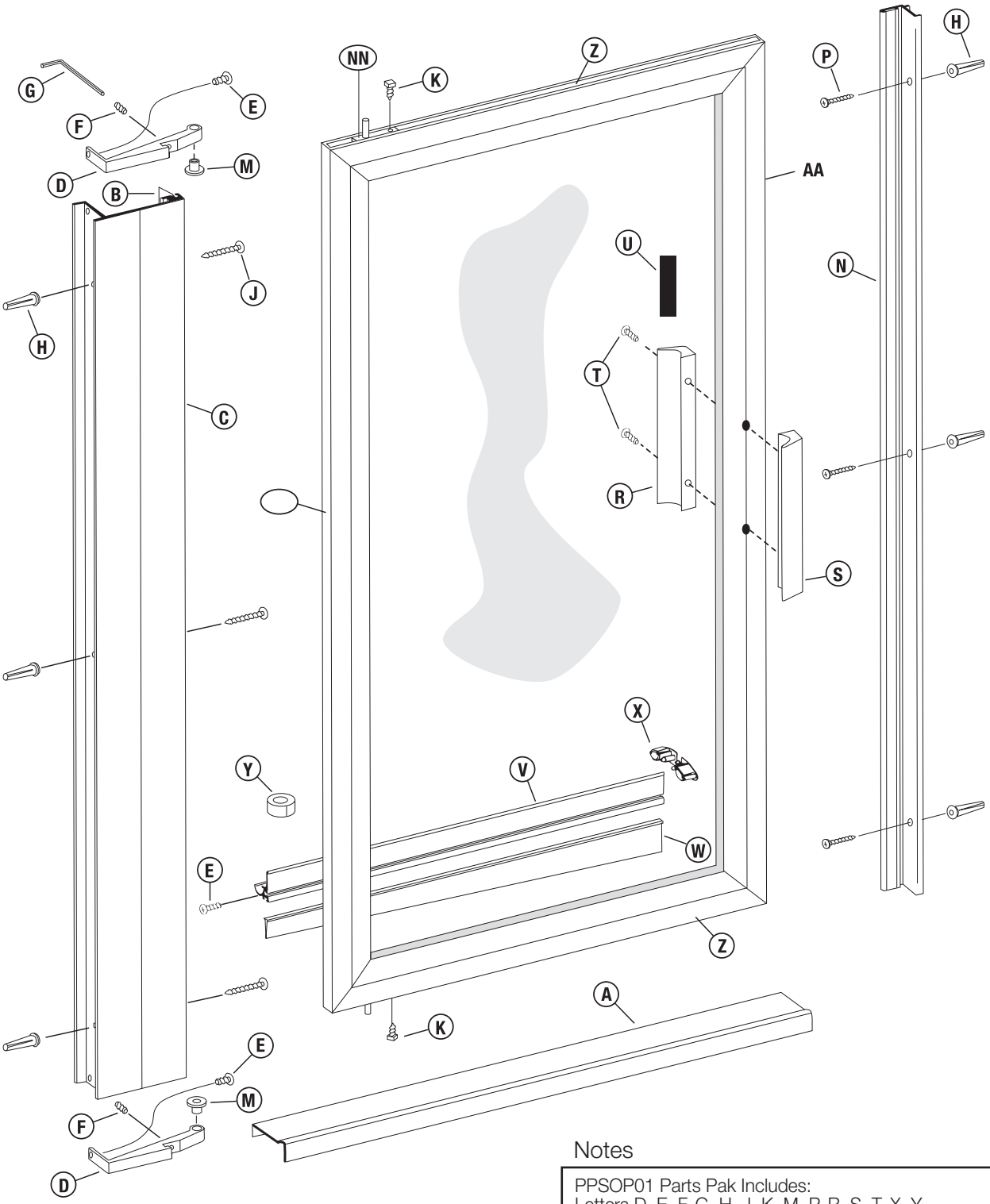

Notes

PPSOP01 Parts Pak Includes: Letters D, E, F, G, H, J, K, M, P, R, S, T, X, Y
Fillers for out of plumb conditions:
SC901*, SC902*, SC910* for walls (vertical) strike. SC850* for pivot side (vertical). SC878* for threshold (horizontal).

100/200/500 Pivot Parts Listing

Framed Deluxe - Legacy Pivot Model (100, 200, 500)

Part Letter	Part Number	Description	Qty/Unit	Length/Each	Chrome *(SV)*	Brushed Nickel *(BN)*, Oil Rubbed Bronze *(OR)*	All other finishes *(see below)*
A	SCX607	Curb	(1)	Cut to Size	50.82	59.29	76.66
B	SCV284U6	Jamb Vinyl - 6' piece	(1)	Each	5.03	-	-
C	SCX621	Pivot Jamb	(1)	Cut to Size	112.48	125.39	138.30
D	SC1557	Pivot Bracket	(2)	Each	15.59	22.19	27.13
E	SCR11	#6 x 3/8" Pan Head Screw	(3)	Each	0.43	-	-
F	SC5114***	Pivot Bracket Set Screw	(2)	Each	0.43	-	-
G	SC5115	Allen Wrench (5/64")	(1)	Each	0.67	-	-
H	SC4106	Plastic Wall Anchor	(6)	Each	0.29	-	-
J	SCR15	#8 x 2" Truss Head Screw	(3)	Each	0.43	-	-
K	SC5080	Square Head Set Screw	(2)	Each	1.22	-	-
M	SC4160	Nylon Washer	(2)	Each	0.88	-	-
N	SCX551	Strike Jamb w/SCV253 (Magnet)	(1)	Cut to Size	70.18	76.86	96.02
P	SCR09	#8 x 1 1/2" Flat Head Screw	(3)	Each	0.43	-	-
R S	SC3317**	5" Exterior & Interior Handle	(1 Set)	Each	24.86	39.18	46.27
T	SCR06	#6 x 1 1/4" Handle Screw	(2)	Each	0.43	-	-
U	SC4531	Basco Decal	(1)	Each	1.02	-	-
V	SCX589	Drip Rail	(1)	Cut to Size	33.73	40.03	44.03
W	SCV284	Tapered Drip Vinyl (37" pc.)	(1)	Each	3.51	-	-
X	SC4000	Drip Plug	(1)	Each	0.47	-	-
Y	SC4248	Two Faced Tape	(1)	Each	3.89	-	-
Z	SCX899	Top or Bottom Door Rail	(2)	Cut to Size	49.45	67.08	73.80
AA	SCX549	Strike Side Rail w/ Magnet (SCV253)	(1)	Cut to Size	76.71	91.52	107.68
BB	SCX900	Pivot Rail	(1)	Cut to Size	74.93	85.59	100.70
NN	SC4254	Pivot Block w/ Pin	(2 of ea)	Set	11.12	-	-
	PPSOP01	Parts Pak for 100, 200 or 500		Each	47.74	54.74	54.74
	SCX878*	Curb Filler		Cut to Size	77.00	87.00	106.00
	SCX910*	3/4" Wall Fill for Strike Jamb		Cut to Size	51.00	70.00	76.00
	SCX850*	1" Wall Fill for Pivot Side		Cut to Size	71.00	81.00	101.00

***Please specify taper if needed and add $45.00 (SCTAPERCHARGE).**
**** 3 1/2" Hole-to-Hole handle dimension.**
***** Part "F" is pre-installed in Part "D".**

Finish Selections (Code)

Chrome (SV)	Brushed Nickel (BN), Oil Rubbed Bronze (OR)	Bronze (BR), Satin Nickel (SN), White (WP), Matte Black (WI)

Inline Configurations

Single Swing Door

Framed Deluxe (335)

Please refer to pages 74-75 for Legacy pivot hinge model.

To insure correct fit when ordering cut to size parts, please indicate complete original unit number.

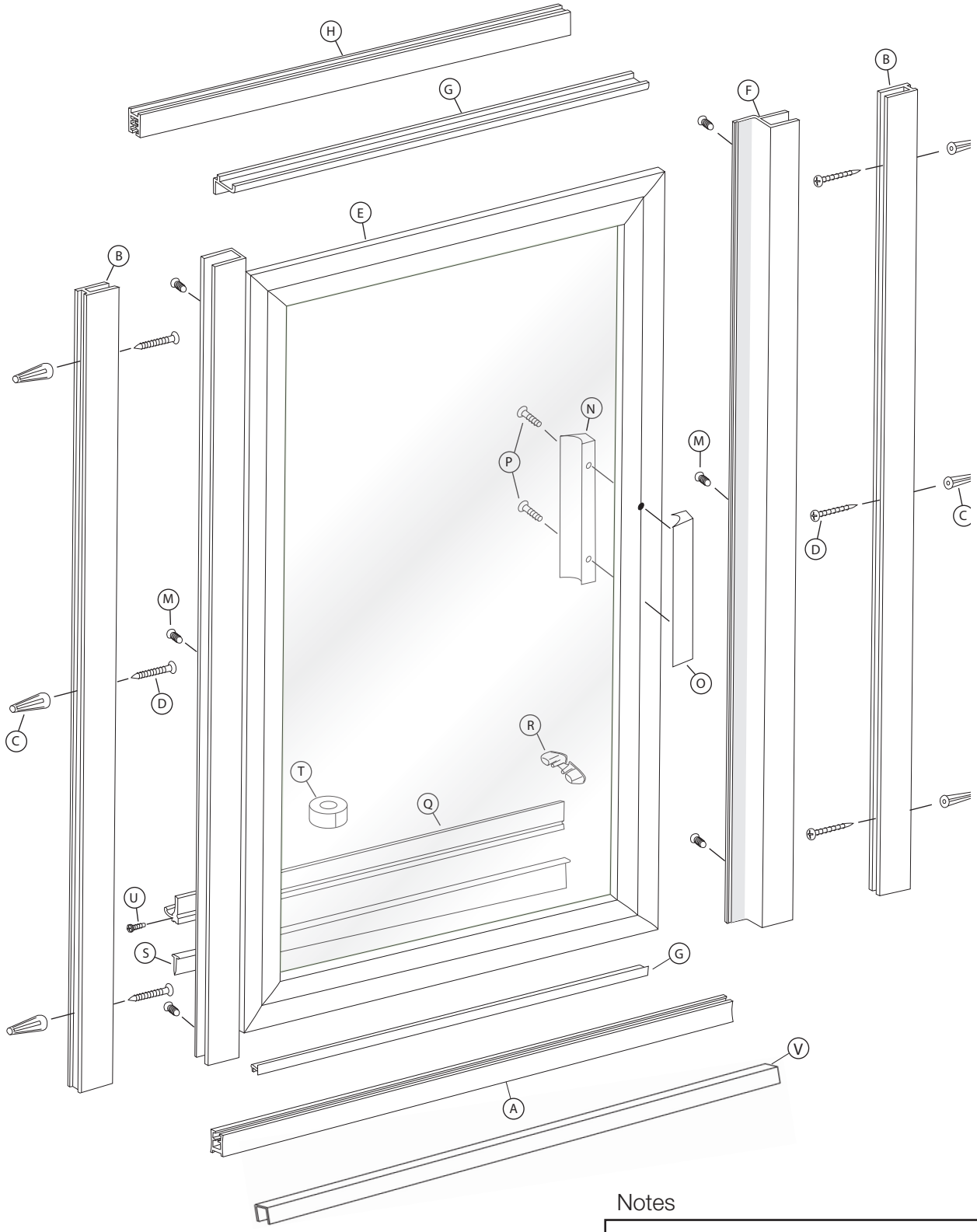

Notes

PPDLX01 Parts Pak Includes: Letters C, D, M, N, O, P, R, T, U
Fillers for out of plumb conditions:
SC543* for tub/shower (horizontal). SC553* for walls (vertical).

Single Swing Door for Fiberglass Modulars

Framed Deluxe (335)

Please refer to pages 68-69 for Legacy pivot hinge model.

335 Continuous Hinge Parts Listing

Part Letter	Part Number	Description	Qty/Unit	Length/Each	Chrome	Brushed Nickel *(BN)*, Oil Rubbed Bronze *(OR)*	All other finishes *(see below)*
A	SCX505B	Curb	(1)	Cut to Size	64.35	72.91	90.18
B	SCX511	180 Post	(2)	Cut to Size	62.98	86.79	100.20
C	SC4106	Plastic Wall Anchor	(6)	Each	0.29	-	-
D	SCR10	#8 x 1 1/2" Truss Head Screw	(6)	Each	0.43	0.43	-
F	SCX522	Strike Jamb w/SCV253 Magnet	(1)	Cut to Size	73.50	95.24	124.05
G	SCX506	Filler (No Holes), Curb & Header	(2)	Cut to Size	34.79	41.39	45.53
H	SCX505	Header	(1)	Cut to Size	57.35	67.13	85.60
M	SCR02	#8-32 x 1/4" Truss Head Screw	(6)	Each	0.43	0.43	-
N O	SC3317**	5" Exterior & Interior Handle	(1 Set)	Each	24.86	39.18	46.27
P	SCR06	#6-32 x 1 1/4" Pan Head Screws	(2)	Each	0.43	0.43	-
Q	SCX589	Drip Rail	(1)	Cut to Size	33.73	40.03	44.03
R	SC4000	Drip Plug	(1)	Each	0.47	-	-
S	SCV284	Tapered Drip Vinyl (37" pc.)	(1)	Each	3.51	-	-
T	SC4248	Two Faced Tape	(1)	Each	3.89	-	-
U	SCR11	#6 x 3/8" Truss Head Screw	(1)	Each	0.43	0.43	-
V	SCX543	Curb Filler		Cut to Size	59.00	69.00	88.00
	PPDLX01	Parts Pak for 335		Each	32.07	41.71	52.51
	SCX553*	1/2" Wall Filler		Cut to Size	43.00	53.00	72.00

***Please specify taper if needed and add $45.00 (SCTAPERCHARGE).**
**** 3 1/2" Hole-to-Hole handle dimension.**

Finish Selections (Code)

Chrome (SV)	Brushed Nickel (BN), Oil Rubbed Bronze (OR)	Bronze (BR), Satin Nickel (SN), White (WP), Matte Black (WI)

Inline Configurations

Single Swing

Framed Deluxe - Legacy Pivot (335)

To insure correct fit when ordering cut to size parts, please indicate complete original unit number.

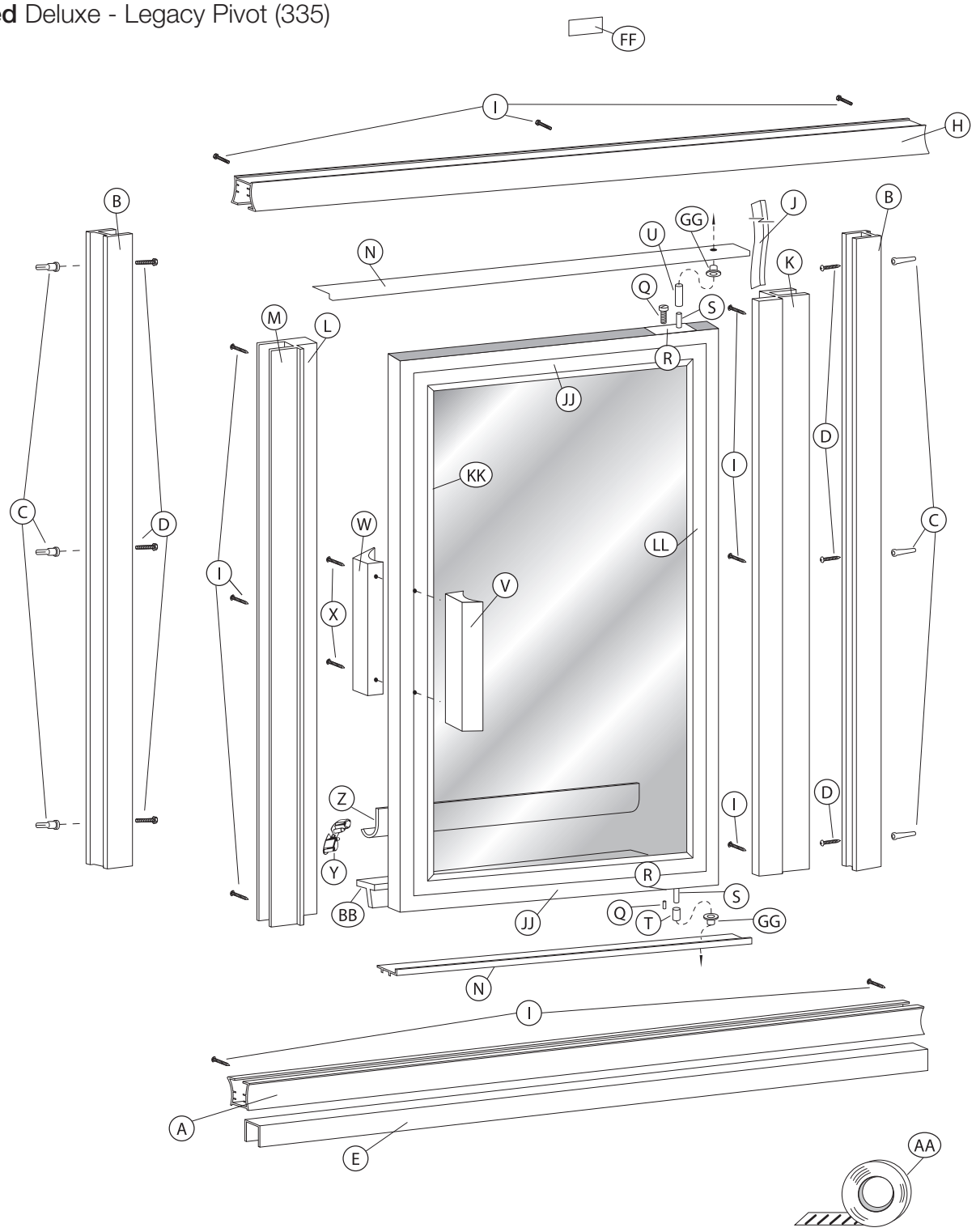

Notes

PPDLX01 Parts Pak Includes: Letters C, D, I, Q, T, U, V, W, X, Y, AA, GG
Fillers for out of plumb conditions:
SC543* for threshold (horizontal).

335 Pivot Parts Listing

Part Letter	Part Number	Description	Qty/Unit	Length/Each	Chrome *(SV)*	Brushed Nickel *(BN)*, Oil Rubbed Bronze *(OR)*	All other finishes *(see below)*
A	SCX505B	Curb	(1)	Cut to Size	64.35	72.91	90.18
B	SCX511	180° Post	(2)	Cut to Size	62.98	86.79	100.20
C	SC4106	Plastic Wall Anchor	(6)	Each	0.29	-	-
D	SCR23	#8 x 2 1/2" O. C. Screw	(6)	Each	0.43	0.43	-
E	SCX543	Curb Filler	(1)	Cut to Size	59.00	69.00	88.00
H	SCX505	Header	(1)	Cut to Size	57.35	67.13	85.60
I	SCR02	#8 x 1/4" Truss Head Screw	(12)	Each	0.43	0.43	-
J	SCV266	Pivot Jamb Vinyl/Pivot Rail Vinyl	(2)	Per Pc.	1.19	-	-
K	SCX533	Pivot Jamb w/SCV266 Vinyl	(1)	Cut to Size	66.55	82.28	95.59
M	SCX522	Strike Jamb w/SCV253 (Magnet)	(1)	Cut to Size	73.50	95.24	124.05
N	SCX506	Snap-in Filler	(2)	Cut to Size	34.79	41.39	45.53
Q	SC5080	Square Head Set Screw	(2)	Each	1.22	-	-
R S	SC4252	Pivot Block with Pin	(2 of ea)	Set	11.12	-	-
T	SC4115	Nylon Spacer	(1)	Each	3.06	-	-
U	SC8196	Security Washer	(1)	Each	0.47	-	-
V W	SC3317	5" Exterior & Interior Handle	(1 Set)	Each	24.86	39.18	46.27
X	SCR06	#6 x 1 1/4" Handle Screw	(2)	Each	0.43	-	-
Y	SC4000	Drip Plug	(1)	Each	0.47	-	-
Z	SCX589	Drip Rail	(1)	Cut to Size	33.73	40.03	44.03
AA	SC4248	Two Faced Tape	(1)	Each	3.89	-	-
BB	SCV284	Tapered Drip Vinyl (37" pc.)	(1)	Each	3.51	-	-
FF	BAS-NP	Basco Name Plate	(1)	Each	1.10	-	-
GG	SC4160	Nylon Washer	(2)	Each	0.88	-	-
JJ	SCX899	Top or Bottom Door Rail	(2)	Cut to Size	49.45	67.08	73.80
KK	SCX549	Strike Side Rail w/ Magnet (SCV253)	(1)	Cut to Size	76.71	91.52	107.68
LL	SCX582	Pivot Side Rail	(1)	Cut to Size	82.85	105.27	134.31
	PPDLX01	Parts Pak for 335		Each	32.07	41.71	52.51
	SCX543*	Curb Filler		Cut to Size	59.00	69.00	88.00

***Please specify taper if needed and add $45.00 (SCTAPERCHARGE).**
**** 3 1/2" Hole-to-Hole handle dimension.**

Finish Selections (Code)

Chrome (SV)	Brushed Nickel (BN), Oil Rubbed Bronze (OR)	Bronze (BR), Satin Nickel (SN), White (WP), Matte Black (WI)

Inline Configurations

Single Swing

Semi-Frameless Classic (3600)

Model # 3610 prior to Jan. 2018

Please refer to pages 76-77 for Legacy pivot hinge model.

To insure correct fit when ordering cut to size parts, please indicate complete original unit number.

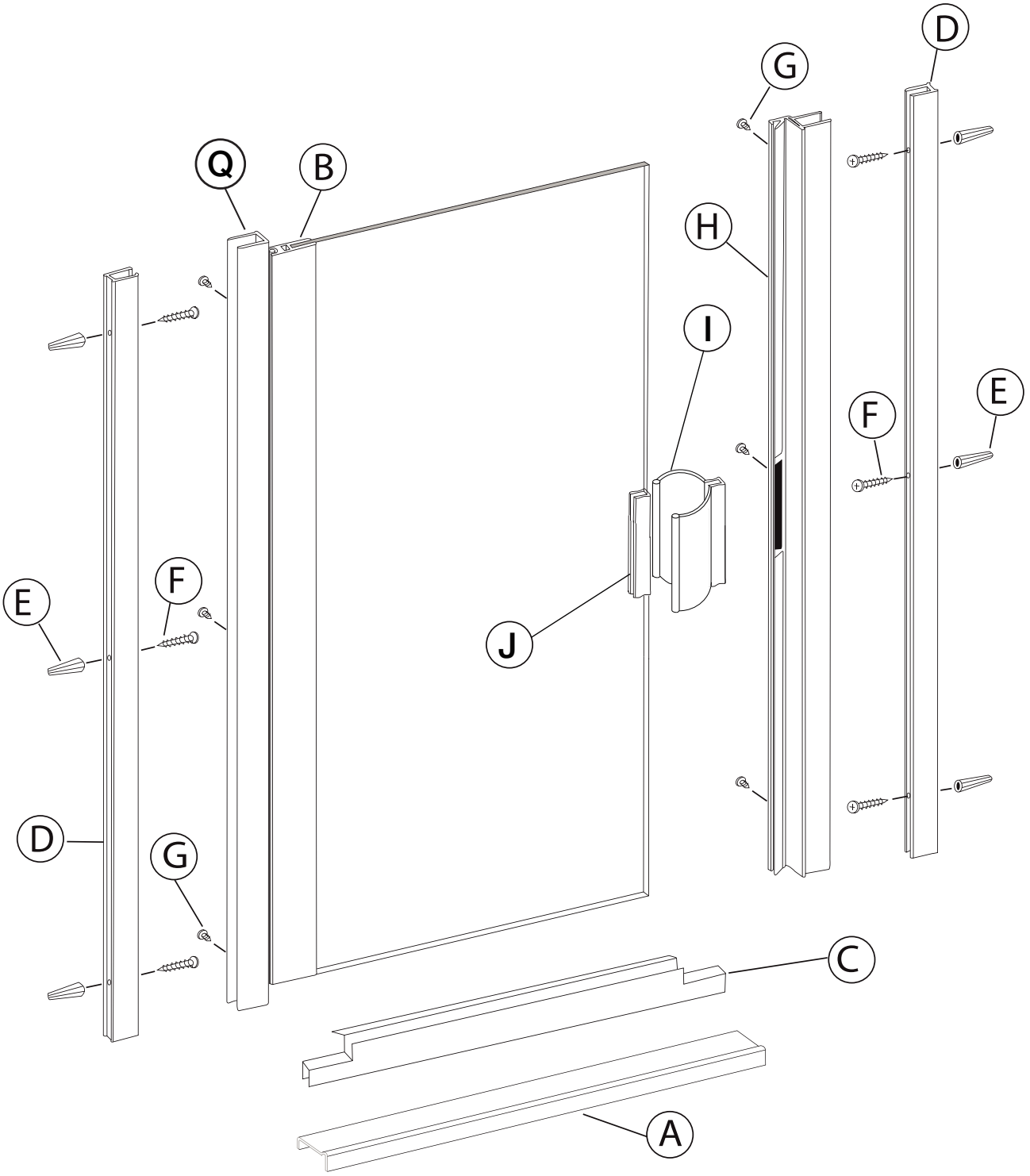

Notes

PPCLC01 Parts Pak Includes: Letters E, F, G
Fillers for out of plumb conditions:
SC553* for walls (vertical). SC878* for threshold (horizontal).

3600 Continuous Hinge Parts Listing

Part Letter	Part Number	Description	Qty/Unit	Length/Each	Chrome *(SV)*	Brushed Nickel *(BN)*, Oil Rubbed Bronze *(OR)*	All other finishes *(see below)*
A	SCX607	Curb	(1)	Cut to Size	50.82	59.29	76.66
B	SCX651	Hinge Rail	(1)	Cut to Size	73.68	85.63	115.52
C	SCV451-38	Clear Bottom Sweep	(1)	Cut to Size	4.52	-	-
D	SCX508	Wall Jamb	(2)	Cut to Size	53.24	69.16	82.11
E	SC4106	Plastic Wall Anchor	(6)	Each	0.29	-	-
F	SCR10	#8 x 1 1/2" Truss Head Screw	(6)	Each	0.43	0.43	-
G	SCR24	#6 x 3/8" Self Tapping Screw	(6)	Each	0.43	0.43	-
H	SCX1452	Strike Jamb w/ Magnet & Vinyl	(1)	Cut to Size	100.00	125.00	200.00
I	SC3700	3" Door Handle w/Strike Plate & Vinyl	(1)	Each	40.10	49.27	60.56
J	SCV257	3" Vinyl for Door Handle for 3/16"	(1)	Each	1.12	-	-
Q	SCX649	Hinge Jamb	(1)	Cut to Size	72.24	83.13	98.07
	PPCLC01	Parts Pak for 3600		Each	23.35	-	-
	SCX553*	1/2" Wall Filler		Cut to Size	43.00	53.00	72.00
	SCX878*	Curb Filler		Cut to Size	77.00	87.00	106.00
	SCV314-84	Strike Jamb Vinyl (w/Pt. H)		Each	6.00	-	-
	SCV257	Glazing Vinyl f/ 3/16" Glass (F/Pt. B)		Per Ft.	1.12	-	-
	SCV308	Glazing Vinyl f/ 1/4" Glass (F/Pt. B)		Per Ft.	1.12	-	-
	SCR5018	Screws f/ Mount Bushings *(f/ parts B & Q)*		Each	.44	-	-
	SC4643	Mount Bushings *(f/ parts B & Q)*	(2)	Each	2.93	-	-
	SC4642	Hinge Bushings *(f/ parts B & Q)*	(2)	Each	6.53	-	-
	SC4644	Spacer Sleeve *(f/ parts B & Q)*	(2)	Each	5.43	-	-
	SC4030	Magnet for Strike Jamb		Each	19.99	-	-

***Please specify taper if needed and add $45.00 (SCTAPERCHARGE).**

Finish Selections (Code)

Chrome (SV)	Brushed Nickel (BN), Oil Rubbed Bronze (OR)	Bronze (BR), Satin Nickel (SN), White (WP), Matte Black (WI)

Inline Configurations

Single Swing

Semi-Frameless Classic - Legacy Pivot Model (3600)

To insure correct fit when ordering cut to size parts, please indicate complete original unit number.

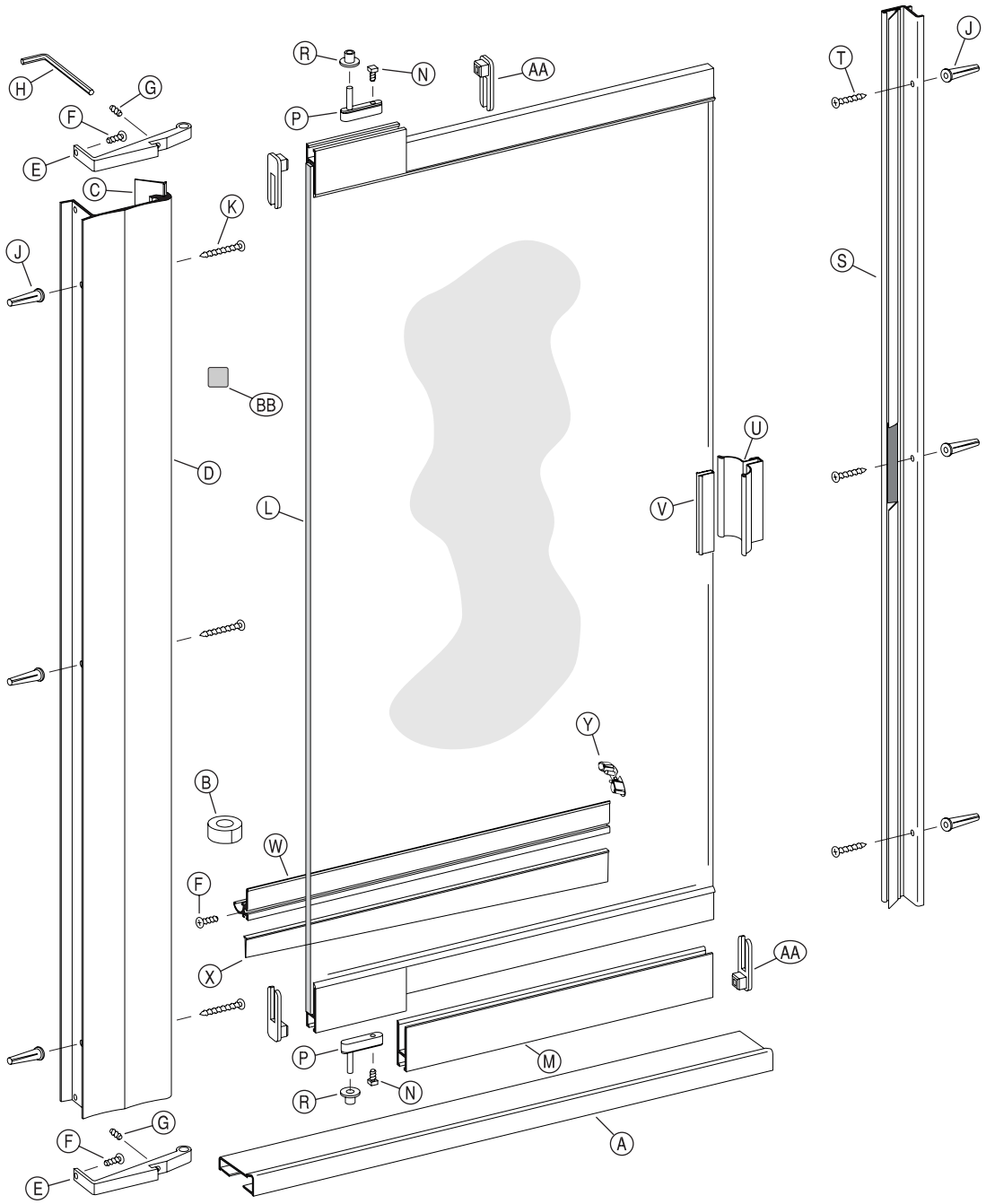

Notes

PPARM01 Parts Pak Includes: Letters B, E, F, G, H, J, K, N, P, R, T, Y, AA Handle must be purchased separately.
Fillers for out of plumb conditions:
SC901*, SC902*, SC910* for walls (vertical) strike. SC850* for pivot side (vertical). SC878* for threshold (horizontal).

3600 Pivot Parts Listing

Part Letter	Part Number	Description	Qty/Unit	Length/Each	Chrome *(SV)*	Brushed Nickel *(BN)*, Oil Rubbed Bronze *(OR)*	All other finishes *(see below)*
A	SCX607	Curb	(1)	Cut to Size	50.82	59.29	76.66
B	SC4248	Two Faced Tape	(1)	Each	3.89	-	-
C	SCV284U6	Jamb Vinyl - 6’ piece	(1)	Each	5.03	-	-
D	SCX621	Pivot Jamb	(1)	Cut to Size	112.48	125.39	138.30
E	SC1557	Pivot Bracket	(2)	Each	15.59	22.19	27.13
F	SCR11	#6 x 3/8” Pan Head Screw	(3)	Each	0.43	0.43	
G	SC5114**	Pivot Bracket Set Screw	(2)	Each	0.43	-	-
H	SC5115	Allen Wrench (5/64”)	(1)	Each	0.67	-	-
J	SC4106	Plastic Wall Anchor	(6)	Each	0.29	-	-
K	SCR15	#8 x 2” Truss Head Screw	(3)	Each	0.43	0.43	-
M	SCX558	Bottom Rail	(1)	Cut to Size	39.45	55.03	60.54
N	SC5080	Square Head Set Screw	(2)	Each	1.22	-	-
P	SC4254	Pivot Block w/ Pin	(2 of ea)	Set	11.12	-	-
R	SC4160	Nylon Washer	(2)	Each	0.88	-	-
S	SCX551F	Strike Jamb w/Magnet & Vinyl	(1)	Cut to Size	75.97	99.33	109.25
T	SCR09	#8 x 1 1/2” Flat Head Screw	(3)	Each	0.43	0.43	-
U	SC3700	3” Door Hndle w/Strike Plate & Vinyl	(1)	Each	40.10	49.27	60.56
V	SCV257	8” Vinyl for Door Handle for 3/16”	(1)	Each	1.12	-	-
V	SCV308	8” Vinyl for Door Handle for 1/4”	(1)	Each	1.12	-	-
W	SCX589	Drip Rail	(1)	Cut to Size	33.73	40.03	44.03
X	SCV284	Tapered Drip Vinyl (37” pc.)	(1)	Each	3.51	-	-
Y	SC4000	Drip Plug	(1)	Each	0.47	-	-
AA	SC4040	Rail End Cap	(4)	Each	1.90	-	-
BB	SC4531	Basco Decal	(1)	Each	1.02	-	-
	SC4030	Magnet for Strike Jamb		Each	19.99	-	-
	PPARM01	Parts Pak for 3600		Each	46.30	49.07 (BN), 48.40(OR)	
	SCX878*	Curb Filler		Cut to Size	77.00	87.00	106.00
	SCX902*	1/4” Wall Fill for Strike Jamb		Cut to Size	33.00	54.00	58.00
	SCX901*	1/2” Wall Fill for Strike Jamb		Cut to Size	47.00	61.00	66.00
	SCX910*	3/4” Wall Fill for Strike Jamb		Cut to Size	51.00	70.00	76.00
	SCX850*	1” Wall Fill for Pivot Side		Cut to Size	71.00	81.00	101.00
	SCV314-84	Strike Jamb Vinyl (w/Pt. S)		Each	6.00	-	-

***Please specify taper if needed and add $45.00 (SCTAPERCHARGE).**
**** Part “G” is pre-installed in Part “E”.**

Finish Selections (Code)

Chrome (SV)	Brushed Nickel (BN), Oil Rubbed Bronze (OR)	Bronze (BR), Satin Nickel (SN), White (WP), Matte Black (WI)

Inline Configurations

Panel/Door/Panel

Semi-Frameless Classic (126)

Model # 126HI/726HI prior to Jan. 2018

Please refer to pages 80-81 for Legacy pivot hinge model.

To insure correct fit when ordering cut to size parts, please indicate complete original unit number.

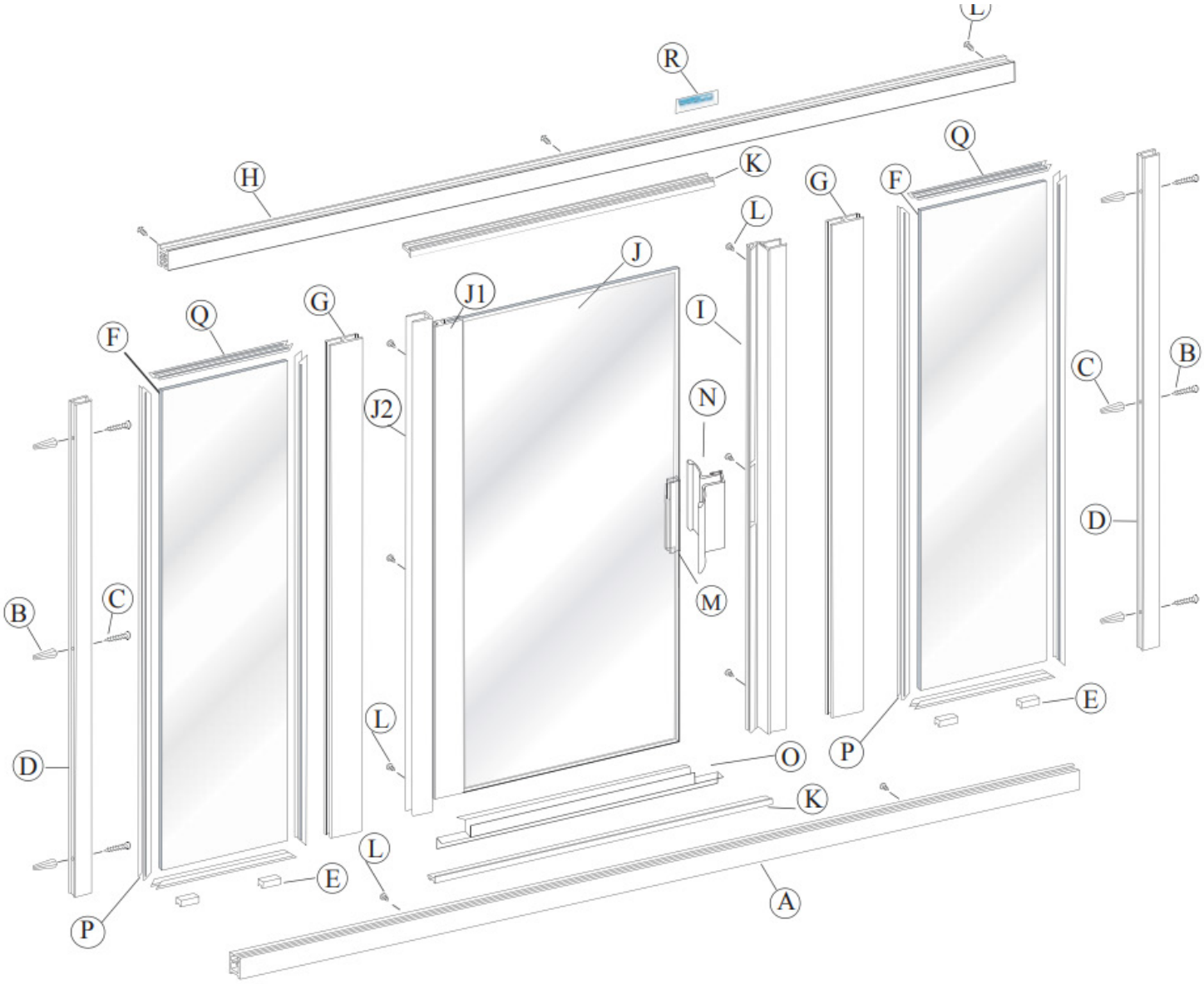

Notes

PPCLC02 Parts Pak Includes: Letters B, C, E, L, R
Fillers for out of plumb conditions:
SC553* for walls (vertical). SC543* for threshold (horizontal).

126 Continuous Hinge Parts Listing

Part Letter	Part Number	Description	Qty/Unit	Length/Each	Chrome *(SV)*	Brushed Nickel *(BN)*, Oil Rubbed Bronze *(OR)*	All other finishes *(see below)*
A	SCX505B	Curb	(1)	Cut to Size	64.35	72.91	90.18
B	SC4106	Plastic Wall Anchor	(6)	Each	0.29	-	-
C	SCR10	#8 x 1 1/2" Truss Head Screw	(6)	Each	0.43	0.43	-
D	SCX508	Wall Jamb	(2)	Cut to Size	53.24	69.16	82.11
E	SCV221	Plastic Setting Block	(4)	Each	0.72	-	-
G	SCX511	180° Post	(2)	Cut to Size	62.98	86.79	100.20
H	SCX505	Header	(1)	Cut to Size	57.35	67.13	85.60
I	SCX552S	Strike Jamb w/ Strike Plate & Shim	(1)	Cut to Size	81.50	106.11	115.95
J1	SCX651	Continuous Hinge Rail	(1)	Cut to Size	73.68	85.63	115.52
J2	SCX649	Continuous Hinge Jamb	(1)	Cut to Size	72.24	83.13	98.07
K	SCX507	Frameless Snap-in Fills	(2)	Cut to Size	47.41	58.83	64.70
L	SCR02	#8 x 1/4" Truss Head Screw	(12)	Each	0.43	0.43	-
M	SC3700	3" Handle w/Vinyl (N) & Strike Plate	(1)	Each	40.10	49.27	60.56
O	SCV451-38	Clear Bottom Sweep	(1)	Cut to Size	4.52	-	-
P	SCV226	Vertical Glazing Vinyl (3/16" Glass)	(8)	Per Ft.	1.02	-	-
Q	SCV225	Horizontal Glazing Vinyl (3/16" Glass)	(8)	Per Ft.	1.12	-	-
R	BAS-NP	Basco Name Plate	(1)	Each	1.10	-	-
	PPCLC02	Frameless Door & Panel Parts Pak		Each	28.37	36.28	45.10
	SC4030	Magnet for Strike Jamb		Each	19.99	-	-
	SCV257	8" Vinyl for Door Handle for 3/16"		Each	1.12	-	-
	SCX543*	Curb Filler		Cut to Size	59.00	69.00	88.00
	SCX553*	1/2" Wall Filler		Cut to Size	43.00	53.00	72.00
	SCX590*	1" Wall Filler - Wall Jamb		Cut to Size	68.00	77.00	96.00

***Please specify taper if needed and add $45.00 (SCTAPERCHARGE).**

Finish Selections (Code)

Chrome (SV)	Brushed Nickel (BN), Oil Rubbed Bronze (OR)	Bronze (BR), Satin Nickel (SN), White (WP), Matte Black (WI)

Inline Configurations

Panel/Door/Panel

Semi-Frameless Classic - Legacy Pivot Model (126/726)

To insure correct fit when ordering cut to size parts, please indicate complete original unit number.

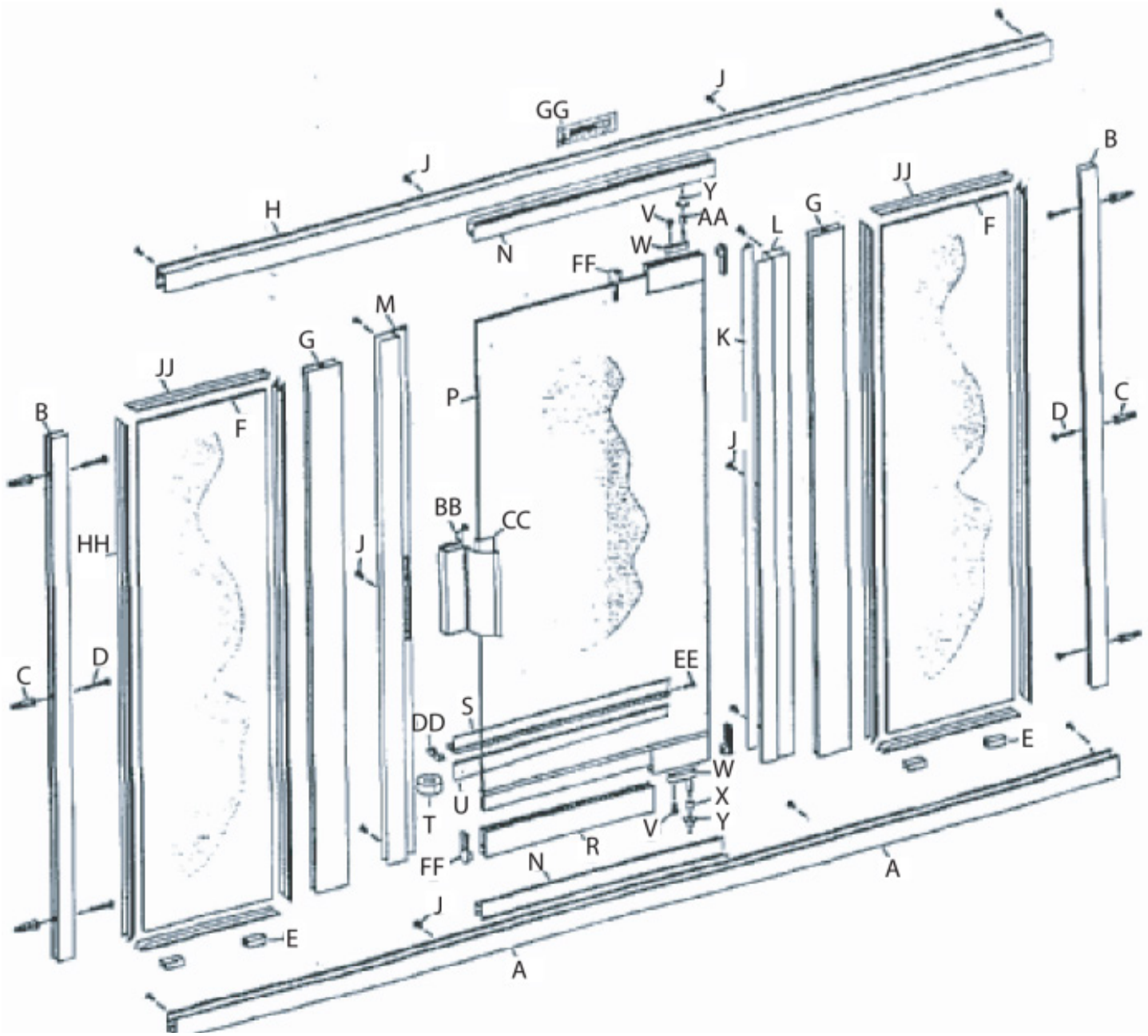

Notes

PPARM02 Parts Pak Includes: Letters C, D, E, J, S, V, W, X, Y, AA, DD, EE, FF, GG
Fillers for out of plumb conditions:
SC553* for walls (vertical). SC543* for threshold (horizontal).

126/726 Pivot Parts Listing

Part Letter	Part Number	Description	Qty/Unit	Length/Each	Chrome *(SV)*	Brushed Nickel *(BN)*, Oil Rubbed Bronze *(OR)*	All other finishes *(see below)*
A	SCX505B	Curb	(1)	Cut to Size	64.35	72.91	90.18
B	SCX508	Wall Jamb	(2)	Cut to Size	53.24	69.16	82.11
C	SC4106	Plastic Wall Anchor	(6)	Each	0.29	-	-
D	SCR10	#8 x 1 1/2" Truss Head Screw	(6)	Each	0.43	0.43	-
E	SCV221	Plastic Setting Block	(4)	Each	0.72	-	-
G	SCX511	180° Post	(2)	Cut to Size	62.98	86.79	100.20
H	SCX505	Header	(1)	Cut to Size	57.35	67.13	85.60
J	SCR02	#8 x 1/4" Truss Head Screw	(14)	Each	0.43	0.43	
K	SCV314-84	Pivot Jamb Vinyl	(1)	Each	6.00	-	-
L	SCX552P	Pivot Jamb w/ SCV314	(1)	Cut to Size	68.97	86.94	108.90
M	SCX552S	Strike Jamb w/ Strike Plate & Shim	(1)	Cut to Size	81.50	106.11	115.95
N	SCX507	Frameless Snap-in Fills	(2)	Cut to Size	47.41	58.83	64.70
R	SCX558	Bottom Rail	(1)	Cut to Size	39.45	55.03	60.54
S	SCX589	Drip Rail	(1)	Cut to Size	33.73	40.03	44.03
T	SC4248	Two Faced Tape	(1)	Each	3.89	-	-
U	SCV284	Tapered Drip Vinyl (37" pc.)	(1)	Each	3.51	-	-
V	SC5080	Square Head Set Screw	(2)	Each	1.22	-	-
W	SC4252	Pivot Blocks w/ Pins	(2 of ea.)	Each	11.12	-	-
X	SC4115	Nylon Spacer	(1)	Each	3.06	-	-
Y	SC4160	Nylon Washer/Pivot Bushings	(2)	Each	0.88	-	-
AA	SC8196	Security Washer	(1)	Each	0.47	-	-
BB	SC3700	3" Handle w/Vinyl (CC) & Strike Plate	(1)	Each	40.10	49.27	60.56
DD	SC4000	Drip Plug	(1)	Each	0.47	-	-
EE	SCR11	#6 x 3/8" Truss Head Screw	(2)	Each	0.43	-	-
FF	SC4041	Rail End Cap	(4)	Each	1.90	-	-
GG	SC4531	Basco Decal	(1)	Each	1.02	-	-
HH	SCV226	Vertical Glazing Vinyl (3/16" Glass)	(4)	Per Ft.	1.02	-	-
JJ	SCV225	Horizontal Glazing Vinyl (3/16" Glass)	(4)	Per Ft.	1.12	-	-
	PPARM02	Frameless Door & Panel Parts Pak		Each	28.37	36.28	45.10
	SC4030	Magnet for Strike Jamb		Each	19.99	-	-
	SCV257	8" Vinyl for Door Handle for 3/16"		Each	1.12	-	-
	SCV308	8" Vinyl for Door Handle for 1/4"		Each	1.12	-	-
	SCX543*	Curb Filler		Cut to Size	59.00	69.00	88.00
	SCX553*	1/2" Wall Filler		Cut to Size	43.00	53.00	72.00
	SCX590*	1" Wall Filler - Wall Jamb		Cut to Size	68.00	77.00	96.00

***Please specify taper if needed and add $45.00 (SCTAPERCHARGE). ** 3 1/2" Hole-to-Hole Handle dimension.**

Finish Selections (Code)

Chrome (SV)	Brushed Nickel (BN), Oil Rubbed Bronze (OR)	Bronze (BR), Satin Nickel (SN), White (WP), Matte Black (WI)

Inline Configurations

Panel/Door/Panel

Framed Deluxe - Legacy Pivot Model (125S/125/725)

To insure correct fit when ordering cut to size parts, please indicate complete original unit number.

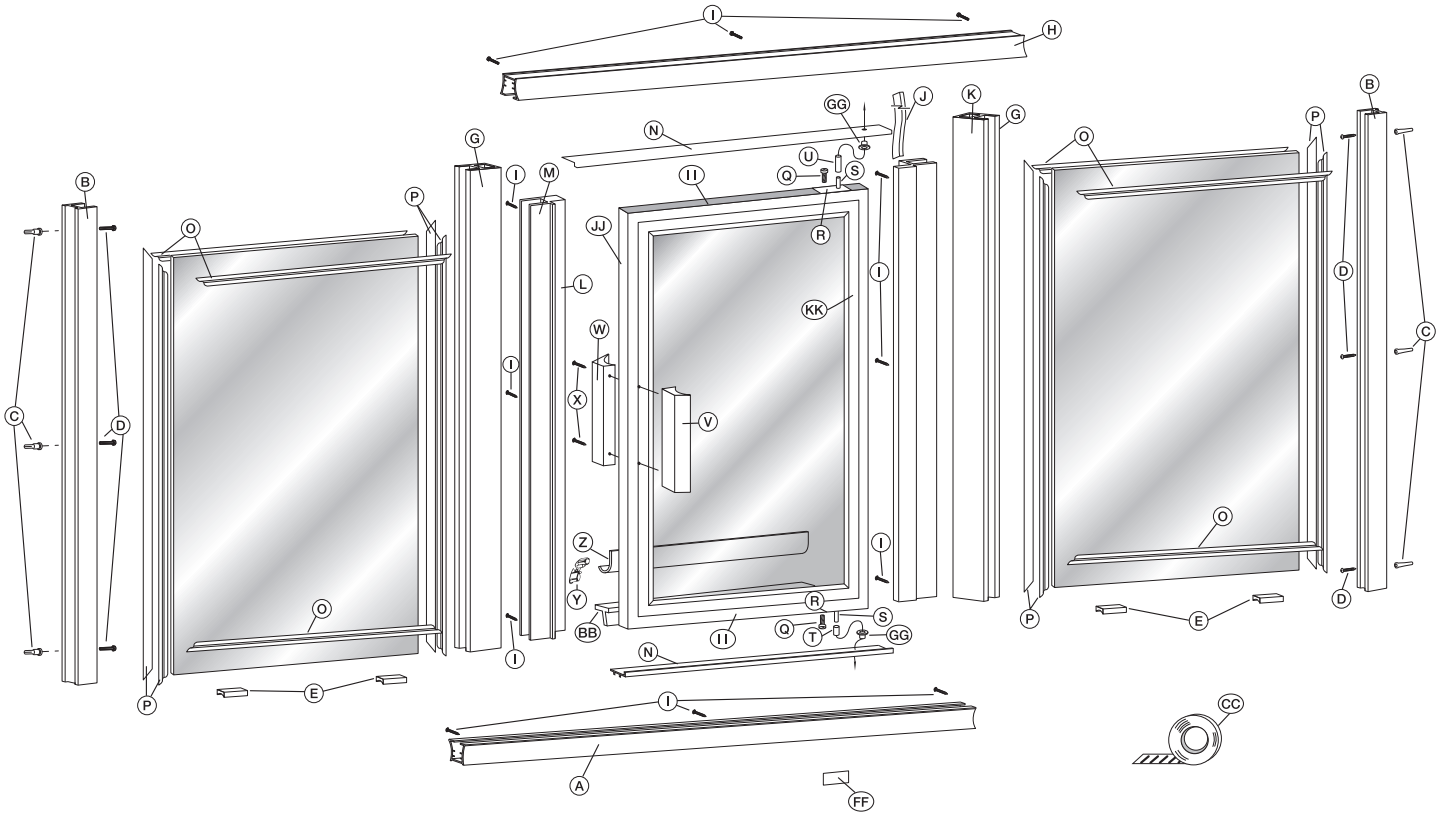

Notes

PPSOP02 Parts Pak Includes: Letters C, D, E, I, Q, T, U, V, W, X, Y, CC, GG
Fillers for out of plumb conditions:
SC553* for walls (vertical). SC543* for threshold (horizontal).

125S/125/725 Pivot Parts Listing

Part Letter	Part Number	Description	Qty/Unit	Length/Each	Chrome *(SV)*	Brushed Nickel *(BN)*, Oil Rubbed Bronze *(OR)*	All other finishes *(see below)*
A	SCX505B	Curb	(1)	Cut to Size	64.35	72.91	90.18
B	SCX508	Wall Jamb	(2)	Cut to Size	53.24	69.16	82.11
C	SC4106	Plastic Wall Anchor	(6)	Each	0.29	-	-
D	SCR10	#8 x 1 1/2" Truss Head Screw	(6)	Each	0.43	0.43	-
E	SCV221	Plastic Setting Block	(4)	Each	0.72	-	-
G	SCX511	180° Post	(2)	Cut to Size	62.98	86.79	100.20
H	SCX505	Header	(1)	Cut to Size	57.35	67.13	85.60
I	SCR02	#8 x 1/4" Truss Head Screw	(12)	Each	0.43	0.43	-
J	SCV266	Pivot Jamb Vinyl/Pivot Rail Vinyl	(1)	Per Pc.	1.19	-	-
K	SCX533	Pivot Jamb w/SCV266 Vinyl	(1)	Cut to Size	66.55	82.28	95.59
L	SCV253	Magnet	(1)	Per Ft.	1.01	-	-
M	SCX522	Strike Jamb w/SCV253 (Magnet)	(1)	Cut to Size	73.50	95.24	124.05
N	SCX506	Snap-in Filler	(2)	Cut to Size	34.79	41.39	45.53
O	SCV225	Horizontal Glazing Vinyl (3/16" Glass)	(4)	Per Ft.	1.12	-	-
P	SCV226	Vertical Glazing Vinyl (3/16" Glass)	(8)	Per Ft.	1.02	-	-
Q	SC5080	Square Head Set Screw	(2)	Each	1.22	-	-
R S	SC4252	Pivot Block with Pin	(2 of ea)	Each	11.12	-	-
T	SC4115	Nylon Spacer	(1)	Each	3.06	-	-
U	SC8196	Security Washer	(1)	Each	0.47	-	-
V W	SC3317**	5" Exterior & Interior Handle	(1 Set)	Each	24.86	39.18	46.27
X	SCR06	#6 x 1 1/4" Handle Screw	(2)	Each	0.43	-	-
Y	SC4000	Drip Plug	(1)	Each	0.47	-	-
Z	SCX589	Drip Rail	(1)	Cut to Size	33.73	40.03	44.03
BB	SCV284	Tapered Drip Vinyl (37" pc.)	(1)	Each	3.51	-	-
CC	SC4248	Two Faced Tape	(1)	Each	3.89	-	-
FF	SC4531	Basco Decal	(1)	Each	1.02	-	-
GG	SC4160	Nylon Washer	(2)	Each	0.88	-	-
II	SCX899	Top or Bottom Door Rail	(2)	Cut to Size	49.45	67.08	73.80
JJ	SCX549	Strike Side Rail w/ Magnet (SCV253)	(1)	Cut to Size	76.71	91.52	107.68
KK	SCX582	Pivot Side Rail	(1)	Cut to Size	82.85	105.27	134.31
	PPSOP02	Parts Pak for 125S, 125 or 725		Each	35.78	45.95	52.28
	SCX543*	Curb Filler		Cut to Size	59.00	69.00	88.00
	SCX553*	1/2" Wall Filler		Cut to Size	43.00	53.00	72.00

***Please specify taper if needed and add $45.00 (SCTAPERCHARGE). ** 3 1/2" Hole-to-Hole Handle dimension.**

Finish Selections (Code)

Chrome (SV)	Brushed Nickel (BN), Oil Rubbed Bronze (OR)	Bronze (BR), Satin Nickel (SN), White (WP), Matte Black (WI)

Inline Configurations

Door & Panel

Semi-Frameless Classic (136)

Model # 136HI/736HI prior to Jan. 2018

Please refer to pages 86-87 for Legacy pivot hinge model.

To insure correct fit when ordering cut to size parts, please indicate complete original unit number.

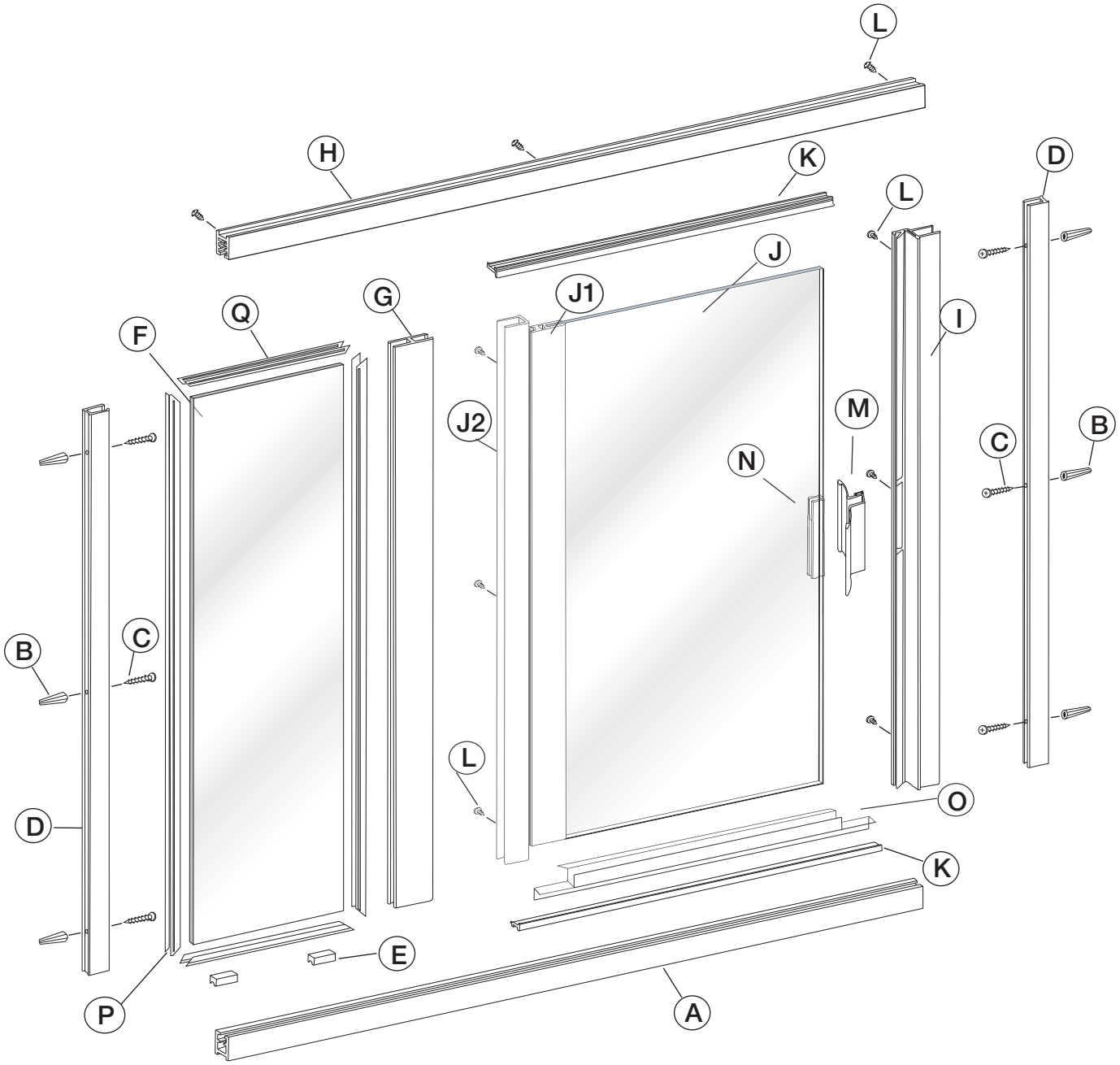

Notes

PPCLC02 Parts Pak Includes: Letters B, C, E, L
Fillers for out of plumb conditions:
SC553* for walls (vertical). SC543* for threshold (horizontal).

136 Continuous Hinge Parts Listing

Part Letter	Part Number	Description	Qty/Unit	Length/Each	Chrome *(SV)*	Brushed Nickel *(BN)*, Oil Rubbed Bronze *(OR)*	All other finishes *(see below)*
A	SCX505B	Curb	(1)	Cut to Size	64.35	72.91	90.18
B	SC4106	Plastic Wall Anchor	(6)	Each	0.29	-	-
C	SCR10	#8 x 1 1/2" Truss Head Screw	(6)	Each	0.43	0.43	-
D	SCX508	Wall Jamb	(2)	Cut to Size	53.24	69.16	82.11
E	SCV221	Plastic Setting Block	(2)	Each	0.72	-	-
G	SCX511	180° Post	(1)	Cut to Size	62.98	86.79	100.20
H	SCX505	Header	(1)	Cut to Size	57.35	67.13	85.60
I	SCX552S	Strike Jamb w/ Strike Plate & Shim	(1)	Cut to Size	81.50	106.11	115.95
J1	SCX651	Continuous Hinge Rail	(1)	Cut to Size	73.68	85.63	115.52
J2	SCX649	Continuous Hinge Jamb	(1)	Cut to Size	72.24	83.13	98.07
K	SCX507	Frameless Snap-in Fills	(2)	Cut to Size	47.41	58.83	64.70
L	SCR02	#8 x 1/4" Truss Head Screw	(12)	Each	0.43	0.43	-
M	SC3700	3" Handle w/Vinyl (N) & Strike Plate	(1)	Each	40.10	49.27	60.56
O	SCV451-38	Clear Bottom Sweep	(1)	Cut to Size	4.52	-	-
P	SCV226	Vertical Glazing Vinyl (3/16" Glass)	(4)	Per Ft.	1.02	-	-
Q	SCV225	Horizontal Glazing Vinyl (3/16" Glass)	(4)	Per Ft.	1.12	-	-
	BAS-NP	Basco Name Plate	(1)	Each	1.20	-	-
	PPCLC02	Frameless Door & Panel Parts Pak		Each	28.37	36.28	45.10
	SC4030	Magnet for Strike Jamb		Each	19.99	-	-
	SCV257	8" Vinyl for Door Handle for 3/16"		Each	1.12	-	-
	SCV308	8" Vinyl for Door Handle for 1/4"		Each	1.12	-	-
	SCX543*	Curb Filler		Cut to Size	59.00	69.00	88.00
	SCX553*	1/2" Wall Filler		Cut to Size	43.00	53.00	72.00
	SCX590*	1" Wall Filler - Wall Jamb		Cut to Size	68.00	77.00	96.00

***Please specify taper if needed and add $45.00 (SCTAPERCHARGE).**

Finish Selections (Code)

Chrome (SV)	Brushed Nickel (BN), Oil Rubbed Bronze (OR)	Bronze (BR), Satin Nickel (SN), White (WP), Matte Black (WI)

Inline Configurations

Swing Door & Panel

Semi-Frameless Classic - Legacy Pivot Model (136/736)

To insure correct fit when ordering cut to size parts, please indicate complete original unit number.

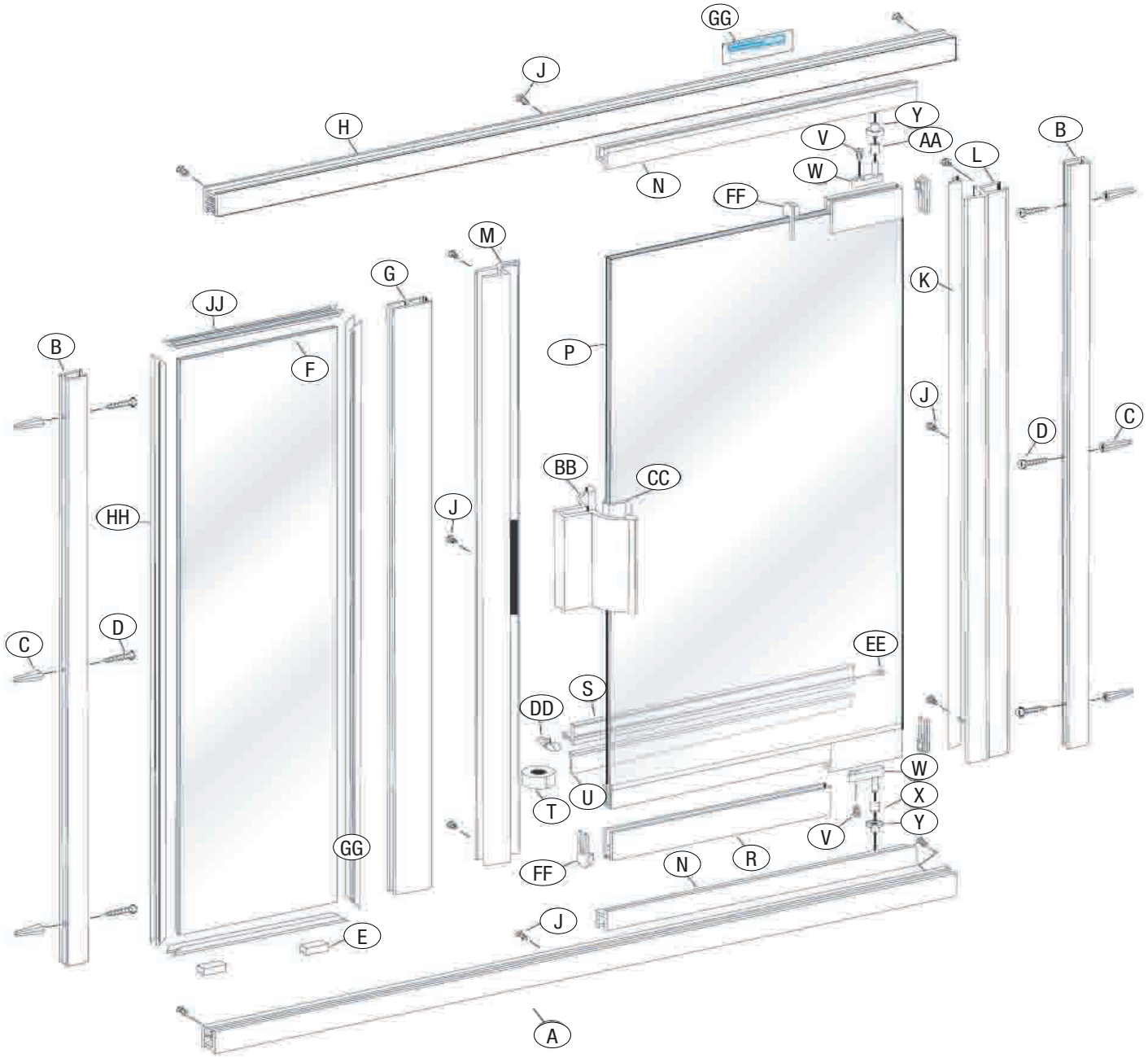

Notes

PPARM02 Parts Pak Includes: Letters C, D, E, J, S, V, W, X, Y, AA, DD, EE, FF, GG
Fillers for out of plumb conditions:
SC553* for walls (vertical). SC543* for threshold (horizontal).

136/736 Pivot Parts Listing

Part Letter	Part Number	Description	Qty/Unit	Length/Each	Chrome *(SV)*	Brushed Nickel *(BN)*, Oil Rubbed Bronze *(OR)*	All other finishes *(see below)*
A	SCX505B	Curb	(1)	Cut to Size	64.35	72.91	90.18
B	SCX508	Wall Jamb	(2)	Cut to Size	53.24	69.16	82.11
C	SC4106	Plastic Wall Anchor	(6)	Each	0.29	-	-
D	SCR10	#8 x 1 1/2" Truss Head Screw	(6)	Each	0.43	0.43	-
E	SCV221	Plastic Setting Block	(2)	Each	0.72	-	-
G	SCX511	180° Post	(1)	Cut to Size	62.98	86.79	100.20
H	SCX505	Header	(1)	Cut to Size	57.35	67.13	85.60
J	SCR02	#8 x 1/4" Truss Head Screw	(12)	Each	0.43	0.43	-
K	SCV314-84	Pivot Jamb Vinyl	(1)	Each	6.00	-	-
L	SCX552P	Pivot Jamb w/ SCV314	(1)	Cut to Size	68.97	86.94	108.90
M	SCX552S	Strike Jamb w/ Strike Plate & Shim	(1)	Cut to Size	81.50	106.11	115.95
N	SCX507	Frameless Snap-in Fills	(2)	Cut to Size	47.41	58.83	64.70
R	SCX558	Bottom Rail	(1)	Cut to Size	39.45	55.03	60.54
S	SCX589	Drip Rail	(1)	Cut to Size	33.73	40.03	44.03
T	SC4248	Two Faced Tape	(1)	Each	3.89	-	-
U	SCV284	Tapered Drip Vinyl (37" pc.)	(1)	Each	3.51	-	-
V	SC5080	Square Head Set Screw	(2)	Each	1.22	-	-
W	SC4252	Pivot Blocks w/ Pins	(2 of ea.)	Each	11.12	-	-
X	SC4115	Nylon Spacer	(1)	Each	3.06	-	-
Y	SC4160	Nylon Washer/Pivot Bushings	(2)	Each	0.88	-	-
AA	SC8196	Security Washer	(1)	Each	0.47	-	-
BB	SC3700	3" Handle w/Vinyl (CC) & Strike Plate	(1)	Each	40.10	49.27	60.56
DD	SC4000	Drip Plug	(1)	Each	0.47	-	-
EE	SCR11	#6 x 3/8" Truss Head Screw	(2)	Each	0.43	-	-
FF	SC4041	Rail End Cap	(4)	Each	1.90	-	-
GG	SC4531	Basco Decal	(1)	Each	1.02	-	-
HH	SCV226	Vertical Glazing Vinyl (3/16" Glass)	(4)	Per Ft.	1.02	-	-
JJ	SCV225	Horizontal Glazing Vinyl (3/16" Glass)	(4)	Per Ft.	1.12	-	-
	PPARM02	Frameless Door & Panel Parts Pak		Each	28.37	36.28	45.10
	SC4030	Magnet for Strike Jamb		Each	19.99	-	-
	SCV257	8" Vinyl for Door Handle for 3/16"		Each	1.12	-	-
	SCV308	8" Vinyl for Door Handle for 1/4"		Each	1.12	-	-
	SCX543*	Curb Filler		Cut to Size	59.00	69.00	88.00
	SCX553*	1/2" Wall Filler		Cut to Size	43.00	53.00	72.00
	SCX590*	1" Wall Filler - Wall Jamb		Cut to Size	68.00	77.00	96.00

***Please specify taper if needed and add $45.00 (SCTAPERCHARGE). ** 3 1/2" Hole-to-Hole Handle dimension.**

Finish Selections (Code)

Chrome (SV)	Brushed Nickel (BN), Oil Rubbed Bronze (OR)	Bronze (BR), Satin Nickel (SN), White (WP), Matte Black (WI)

Inline Configurations

Swing Door & Panel

Framed Deluxe - Legacy Pivot Model (135/735)

To insure correct fit when ordering cut to size parts, please indicate complete original unit number.

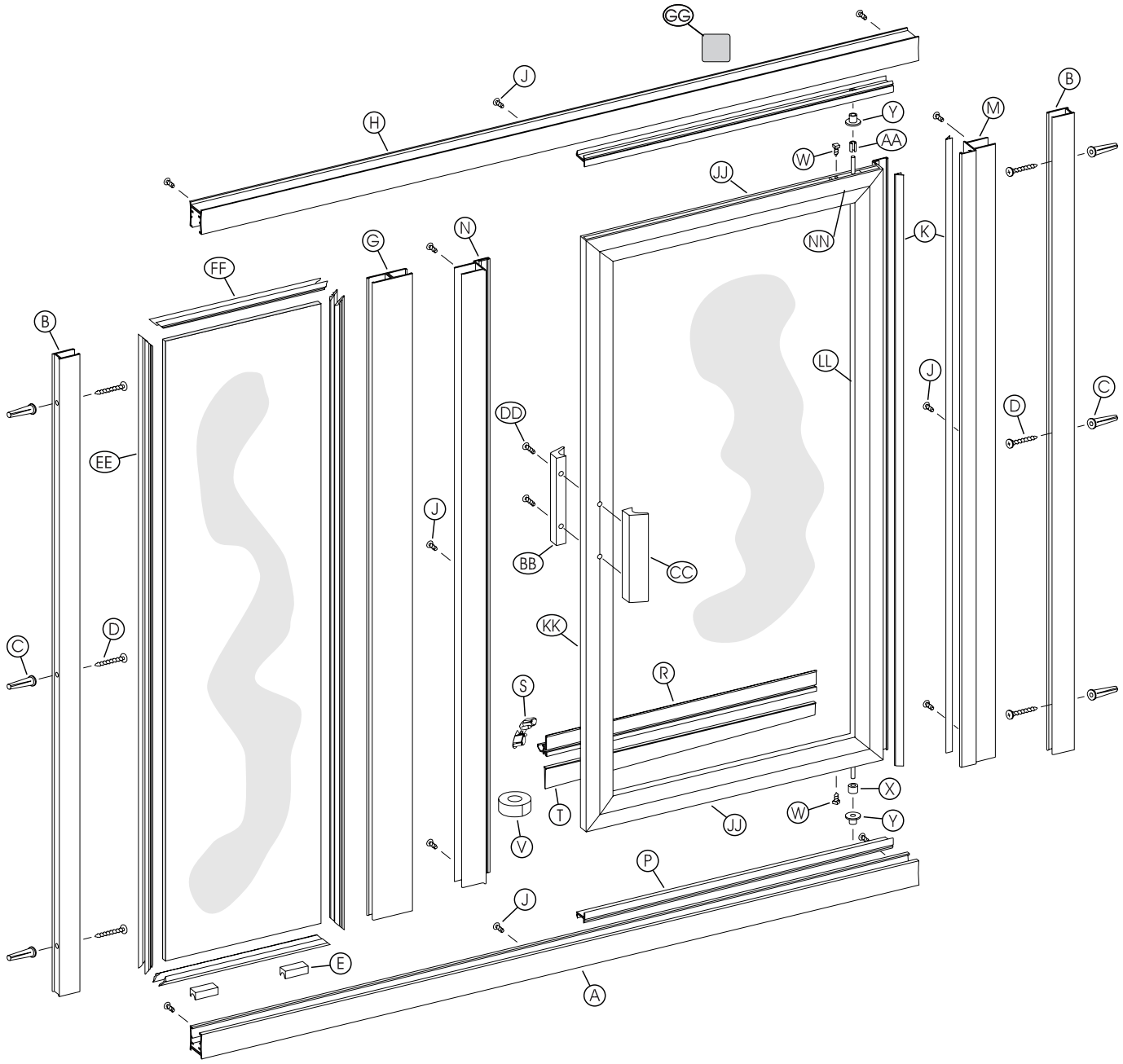

Notes

PPSOP02 Parts Pak Includes: Letters C, D, E, J, S, V, W, X, Y, AA, BB, CC, DD
Fillers for out of plumb conditions:
SC553* for walls (vertical). SC543* for threshold (horizontal).

135/735 Pivot Hinge Parts Listing

Part Letter	Part Number	Description	Qty/Unit	Length/Each	Chrome *(SV)*	Brushed Nickel *(BN)*, Oil Rubbed Bronze *(OR)*	All other finishes *(see below)*
A	SCX505B	Curb	(1)	Cut to Size	64.35	72.91	90.18
B	SCX508	Wall Jamb	(2)	Cut to Size	53.24	69.16	82.11
C	SC4106	Plastic Wall Anchor	(6)	Each	0.29	-	-
D	SCR10	#8 x 1 1/2" Truss Head Screw	(6)	Each	0.43	0.43	-
E	SCV221	Plastic Setting Block	(2)	Each	0.72	-	-
G	SCX511	180° Post	(1)	Cut to Size	62.98	86.79	100.20
H	SCX505	Header	(1)	Cut to Size	57.35	67.13	85.60
J	SCR02	#8 x 1/4" Truss Head Screw	(12)	Each	0.43	0.43	-
K	SCV266	Pivot Jamb Vinyl/Pivot Rail Vinyl	(1)	Per Pc.	1.19	-	-
M	SCX533	Pivot Jamb w/SCV266 Vinyl	(1)	Cut to Size	66.55	82.28	95.59
N	SCX522	Strike Jamb w/SCV253 (Magnet)	(1)	Cut to Size	73.50	95.24	124.05
P	SCX506	Snap-in Filler	(2)	Cut to Size	34.79	41.39	45.53
R	SCX589	Drip Rail	(1)	Cut to Size	33.73	40.03	44.03
S	SC4000	Drip Plug	(1)	Each	0.47	-	-
T	SCV284	Tapered Drip Vinyl (37" pc.)	(1)	Each	3.51	-	-
V	SC4248	Two Faced Tape	(1)	Each	3.89	-	-
W	SC5080	Square Head Set Screw	(2)	Each	1.22	-	-
X	SC4115	Nylon Spacer	(1)	Each	3.06	-	-
Y	SC4160	Nylon Washer	(2)	Each	0.88	-	-
AA	SC8196	Security Washer	(1)	Each	0.47	-	-
BB CC	SC3317**	5" Exterior & Interior Handle	(1 Set)	Each	24.86	39.18	46.27
DD	SCR06	#6 x 1 1/4" Handle Screw	(2)	Each	0.43	-	-
EE	SCV226	Vertical Glazing Vinyl (3/16" Glass)	(4)	Per Ft.	1.02	-	-
FF	SCV225	Horizontal Glazing Vinyl (3/16" Glass)	(4)	Per Ft.	1.12	-	-
GG	SC4531	Basco Decal	(1)	Each	1.02	-	-
JJ	SCX899	Top or Bottom Door Rail	(2)	Cut to Size	49.45	67.08	73.80
KK	SCX549	Strike Side Rail w/ Magnet (SCV253)	(1)	Cut to Size	76.71	91.52	107.68
LL	SCX582	Pivot Side Rail	(1)	Cut to Size	82.85	105.27	134.31
NN	SC4252	Pivot Block with Pin	(2 of ea)	Each	11.12	-	-
	PPSOP02	Parts Pak for 135S, 135 or 735		Each	35.78	45.95	52.28
	SCX543*	Curb Filler		Cut to Size	59.00	69.00	88.00
	SCX553*	1/2" Wall Filler		Cut to Size	43.00	53.00	72.00

***Please specify taper if needed and add $45.00 (SCTAPERCHARGE). ** 3 1/2" Hole-to-Hole Handle dimension.**

Finish Selections (Code)

Chrome (SV)	Brushed Nickel (BN), Oil Rubbed Bronze (OR)	Bronze (BR), Satin Nickel (SN), White (WP), Matte Black (WI)

Return Configurations

Door & Return Panel

Semi-Frameless Classic (146)

Model # 146HI/746HI prior to Jan. 2018

Please refer to pages 90-91 for Legacy pivot hinge model.

To insure correct fit when ordering cut to size parts, please indicate complete original unit number.

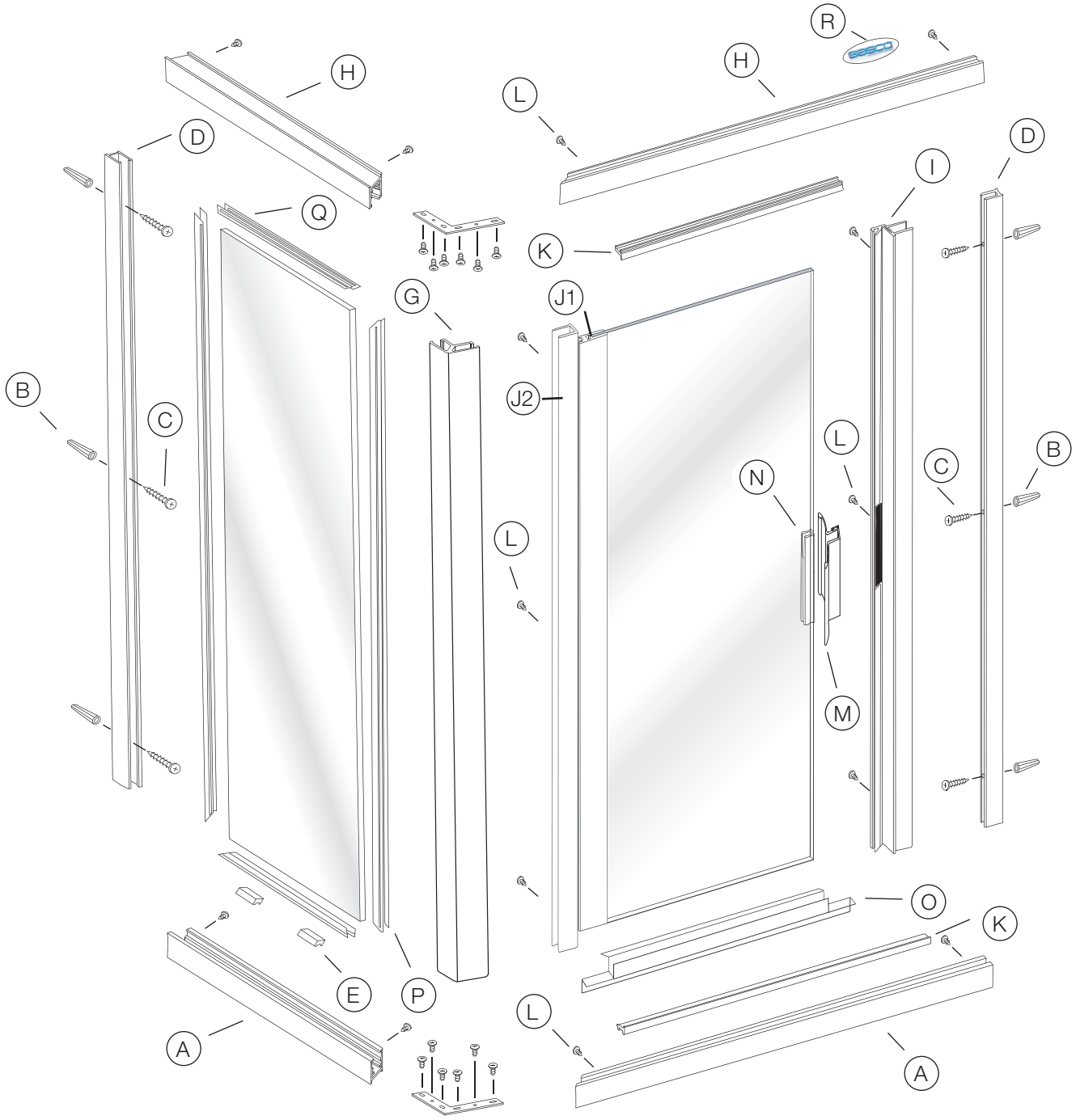

Notes

PPCLC02 Parts Pak Includes: Letters B, C, E, L
Fillers for out of plumb conditions:
SC553* for walls (vertical). SC543* for threshold (horizontal).

Door & Return Panel

Semi-Frameless Classic (146)

Model # 146HI/746HI prior to Jan. 2018

Please refer to pages 88-89 for Legacy pivot hinge model.

146 Continuous Hinge Parts Listing

Part Letter	Part Number	Description	Qty/Unit	Length/Each	Chrome *(SV)*	Brushed Nickel *(BN)*, Oil Rubbed Bronze *(OR)*	All other finishes *(see below)*
A	SCX505B	Curb	(1)	Cut to Size	64.35	72.91	90.18
B	SC4106	Plastic Wall Anchor	(6)	Each	0.29	-	-
C	SCR10	#8 x 1 1/2" Truss Head Screw	(6)	Each	0.43	0.43	-
D	SCX508	Wall Jamb	(2)	Cut to Size	53.24	69.16	82.11
E	SCV221	Plastic Setting Block	(2)	Each	0.72	-	-
G	SCX513	90° Corner Post	(1)	Cut to Size	78.57	107.56	112.68
H	SCX505	Header	(1)	Cut to Size	57.35	67.13	85.60
I	SCX552S	Strike Jamb w/ Strike Plate & Shim	(1)	Cut to Size	81.50	106.11	115.95
J1	SCX651	Continuous Hinge Rail	(1)	Cut to Size	73.68	85.63	115.52
J2	SCX649	Continuous Hinge Jamb	(1)	Cut to Size	72.24	83.13	98.07
K	SCX507	Frameless Snap-in Fills	(2)	Cut to Size	47.41	58.83	64.70
L	SCR02	#8 x 1/4" Truss Head Screw	(9)	Each	0.43	0.43	-
M	SC3700	3" Handle w/Vinyl (N) & Strike Plate	(1)	Each	40.10	49.27	60.56
O	SCV451-38	Clear Bottom Sweep	(1)	Cut to Size	4.52	-	-
P	SCV226	Vertical Glazing Vinyl (3/16" Glass)	(4)	Per Ft.	1.02	-	-
Q	SCV225	Horizontal Glazing Vinyl (3/16" Glass)	(4)	Per Ft.	1.12	-	-
R	BAS-NP	Basco Name Plate	(1)	Each	1.10	-	-
	PPCLC02	3/16" Semi-FL Door/Panel Parts Pak		Each	28.37	36.28	45.10
	SC4030	Magnet for Strike Jamb		Each	19.99	-	-
	SCV257	8" Vinyl for Door Handle for 3/16"		Each	1.12	-	-
	SCV308	8" Vinyl for Door Handle for 1/4"		Each	1.12	-	-
	SCX543*	Curb Filler		Cut to Size	59.00	69.00	88.00
	SCX553*	1/2" Wall Filler		Cut to Size	43.00	53.00	72.00
	SCX590*	1" Wall Filler - Wall Jamb		Cut to Size	68.00	77.00	96.00

***Please specify taper if needed and add $45.00 (SCTAPERCHARGE).**

Finish Selections (Code)

Chrome (SV)	Brushed Nickel (BN), Oil Rubbed Bronze (OR)	Bronze (BR), Satin Nickel (SN), White (WP), Matte Black (WI)

Return Configurations

Swing Door & Return Panel

Semi-Frameless Classic - Legacy Pivot Model (146/746)

To insure correct fit when ordering cut to size parts, please indicate complete original unit number.

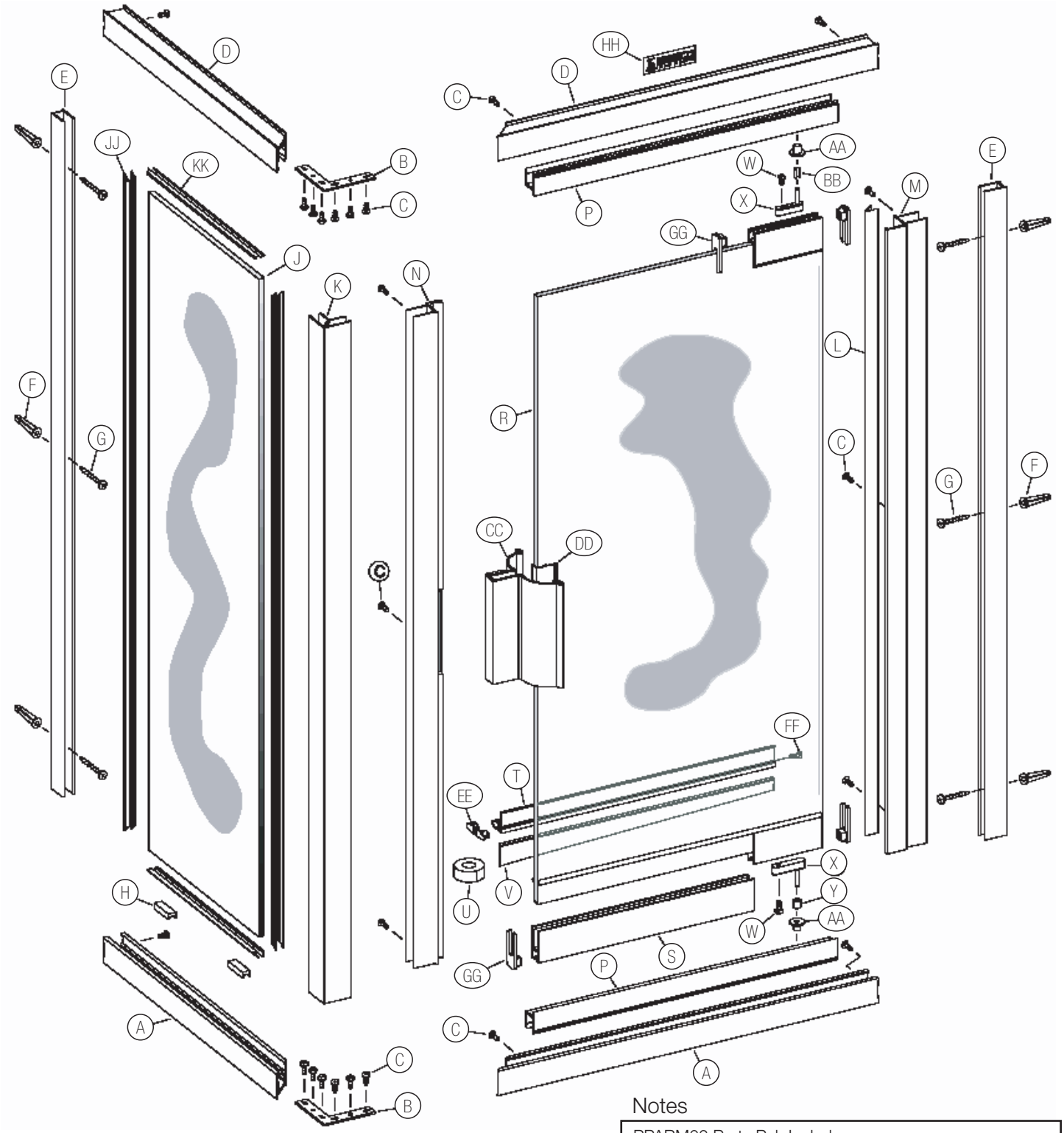

Notes

PPARM02 Parts Pak Includes: Letters B, C, F, G, H, U, V, W, X, Y, AA, BB, CC, DD, EE FF, GG, HH
Fillers for out of plumb conditions:
SC553* for walls (vertical). SC543* for threshold (horizontal).

Swing Door & Return Panel

Semi-Frameless Classic - Legacy Pivot Model (146/746)

146/746 Pivot Hinge Parts Listing

Part Letter	Part Number	Description	Qty/Unit	Length/Each	Chrome *(SV)*	Brushed Nickel *(BN)*, Oil Rubbed Bronze *(OR)*	All other finishes *(see below)*
A	SCX505B	Curb	(2)	Cut to Size	64.35	72.91	90.18
B	SC4123	90° Anchor Plate	(2)	Each	11.76	-	-
C	SCR02	#8 x 1/4" Truss Head Screw	(24)	Each	0.43	0.43	-
D	SCX505	Header	(2)	Cut to Size	57.35	67.13	85.60
E	SCX508	Wall Jamb	(2)	Cut to Size	53.24	69.16	82.11
F	SC4106	Plastic Wall Anchor	(6)	Each	0.29	-	-
G	SCR10	#8 x 1 1/2" Truss Head Screw	(6)	Each	0.43	0.43	-
H	SCV221	Plastic Setting Block	(2)	Each	0.72	-	-
K	SCX513	90° Corner Post	(1)	Cut to Size	78.57	107.56	112.68
J	SCR02	#8 x 1/4" Truss Head Screw	(12)	Each	0.43	0.43	-
L	SCV314-84	Pivot Jamb Vinyl	(1)	Each	6.00		- -
M	SCX552P	Pivot Jamb w/ SCV314	(1)	Cut to Size	68.97	86.94	108.90
N	SCX552S	Strike Jamb w/ Strike Plate & Shim	(1)	Cut to Size	81.50	106.11	115.95
P	SCX507	Frameless Snap-in Fills	(2)	Cut to Size	47.41	58.83	64.70
S	SCX558	Bottom Rail	(1)	Cut to Size	39.45	55.03	60.54
T	SCX589	Drip Rail	(1)	Cut to Size	33.73	40.03	44.03
U	SC4248	Two Faced Tape	(1)	Each	3.89	-	-
V	SCV284	Tapered Drip Vinyl (37" pc.)	(1)	Each	3.51	-	-
W	SC5080	Square Head Set Screw	(2)	Each	1.22	-	-
X	SC4252	Pivot Blocks w/ Pins	(2 of ea.)	Each	11.12	-	-
Y	SC4115	Nylon Spacer	(1)	Each	3.06	-	-
AA	SC4160	Nylon Washer/Pivot Bushings	(2)	Each	0.88	-	-
BB	SC8196	Security Washer	(1)	Each	0.47	-	-
CC	SC3700	3" Handle w/Vinyl (DD) & Strike Plate	(1)	Each	40.10	49.27	60.56
EE	SC4000	Drip Plug	(2)	Each	0.47	-	-
FF	SCR11	#6 x 3/8" Truss Head Screw	(1)	Each	0.43	-	-
GG	SC4040	Rail End Cap	(4)	Each	1.90	-	-
HH	SC4531	Basco Decal	(1)	Each	1.02	-	-
JJ	SCV226	Vertical Glazing Vinyl (3/16" Glass)	(4)	Per Ft.	1.02	-	-
KK	SCV225	Horizontal Glazing Vinyl (3/16" Glass)	(4)	Per Ft.	1.12	-	-
	PPARM02	Frameless Door & Panel Parts Pak		Each	28.37	36.28	45.10
	SC4030	Magnet for Strike Jamb		Each	19.99	-	-
	SCV257	8" Vinyl for Door Handle for 3/16"		Each	1.12	-	-
	SCV308	8" Vinyl for Door Handle for 1/4"		Each	1.12	-	-
	SCX543*	Curb Filler		Cut to Size	59.00	69.00	88.00
	SCX553*	1/2" Wall Filler		Cut to Size	43.00	53.00	72.00
	SCX590*	1" Wall Filler - Wall Jamb		Cut to Size	68.00	77.00	96.00

***Please specify taper if needed and add $45.00 (SCTAPERCHARGE). ** 3 1/2" Hole-to-Hole Handle dimension.**

Finish Selections (Code)

Chrome (SV)	Brushed Nickel (BN), Oil Rubbed Bronze (OR)	Bronze (BR), Satin Nickel (SN), White (WP), Matte Black (WI)

Return Configurations

Swing Door & Return Panel

Framed Deluxe - Legacy Pivot Model (145/745)

To insure correct fit when ordering cut to size parts, please indicate complete original unit number.

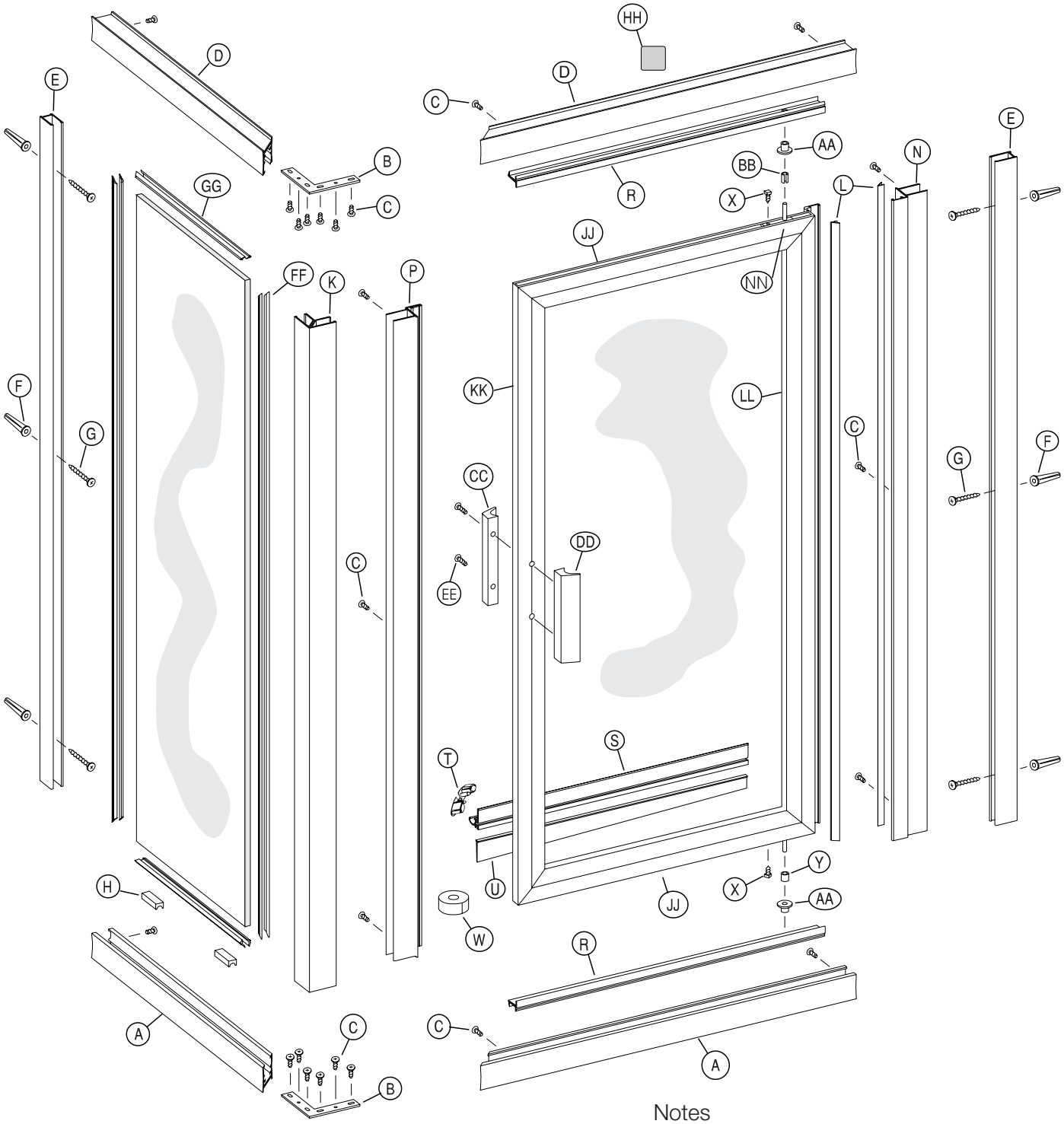

Notes

PPSOP02 Parts Pak Includes: Letters B, C, F, G, H, W, X, Y, AA, BB, CC, DD, EE
Fillers for out of plumb conditions:
SC553* for walls (vertical). SC543* for threshold (horizontal).

Swing Door & Return Panel

Framed Deluxe - Legacy Pivot Model (145/745)

145/745 Pivot Hinge Parts Listing

Part Letter	Part Number	Description	Qty/Unit	Length/Each	Chrome *(SV)*	Brushed Nickel *(BN)*, Oil Rubbed Bronze *(OR)*	All other finishes *(see below)*
A	SCX505B	Curb	(2)	Cut to Size	64.35	72.91	90.18
B	SC4123	90° Anchor Plate	(2)	Each	11.76	-	-
C	SCR02	#8 x 1/4" Truss Head Screw	(24)	Each	0.43	0.43	-
D	SCX505	Header	(2)	Cut to Size	57.35	67.13	85.60
E	SCX508	Wall Jamb	(2)	Cut to Size	53.24	69.16	82.11
F	SC4106	Plastic Wall Anchor	(6)	Each	0.29	-	-
G	SCR10	#8 x 1 1/2" Truss Head Screw	(6)	Each	0.43	0.43	-
H	SCV221	Plastic Setting Block	(2)	Each	0.72	-	-
K	SCX513	90° Corner Post	(1)	Cut to Size	78.57	107.56	112.68
L	SCV266-83	Pivot Jamb Vinyl/Pivot Rail Vinyl	(1)	Per Pc.	5.57	-	-
N	SCX533	Pivot Jamb w/SCV266 Vinyl	(1)	Cut to Size	66.55	82.28	95.59
P	SCX522	Strike Jamb w/SCV253 (Magnet)	(1)	Cut to Size	73.50	95.24	124.05
R	SCX506	Snap-in Filler	(2)	Cut to Size	34.79	41.39	45.53
S	SCX589	Drip Rail	(1)	Cut to Size	33.73	40.03	44.03
T	SC4000	Drip Plug	(1)	Each	0.47	-	-
U	SCV284	Tapered Drip Vinyl (37" pc.)	(1)	Each	3.51	-	-
W	SC4248	Two Faced Tape	(1)	Each	3.89	-	-
X	SC5080	Square Head Set Screw	(2)	Each	1.22	-	-
Y	SC4115	Nylon Spacer	(1)	Each	3.06	-	-
AA	SC4160	Nylon Washer	(2)	Each	0.88	-	-
BB	SC8196	Security Washer	(1)	Each	0.47	-	-
CC DD	SC3317**	5" Exterior & Interior Handle	(1 Set)	Each	24.86	39.18	46.27
EE	SCR06	#6 x 1 1/4" Handle Screw	(2)	Each	0.43	-	-
FF	SCV226	Vertical Glazing Vinyl (3/16" Glass)	(4)	Per Ft.	1.02	-	-
GG	SCV225	Horizontal Glazing Vinyl (3/16" Glass)	(4)	Per Ft.	1.12	-	-
HH	SC4531	Basco Decal	(1)	Each	1.02	-	-
JJ	SCX899	Top or Bottom Door Rail	(2)	Cut to Size	49.45	67.08	73.80
KK	SCX549	Strike Side Rail w/ Magnet (SCV253)	(1)	Cut to Size	76.71	91.52	107.68
LL	SCX582	Pivot Side Rail	(1)	Cut to Size	82.85	105.27	134.31
NN	SC4252	Pivot Block with Pin	(2 of ea)	Each	11.12	-	-
	PPSOP02	Parts Pak for 145 or 745		Each	35.78	45.95	52.28
	SCX543*	Curb Filler		Cut to Size	59.00	69.00	88.00
	SCX553*	1/2" Wall Filler		Cut to Size	43.00	53.00	72.00

***Please specify taper if needed and add $45.00 (SCTAPERCHARGE). ** 3 1/2" Hole-to-Hole Handle dimension.**

Finish Selections (Code)

Chrome (SV)	Brushed Nickel (BN), Oil Rubbed Bronze (OR)	Bronze (BR), Satin Nickel (SN), White (WP), Matte Black (WI)

Return Configurations

Door, Inline Panel & Return Panel

Semi-Frameless Classic (151)

Model # 151HI/751HI prior to Jan. 2018

Please refer to pages 96-97 for Legacy pivot hinge model.

To insure correct fit when ordering cut to size parts, please indicate complete original unit number.

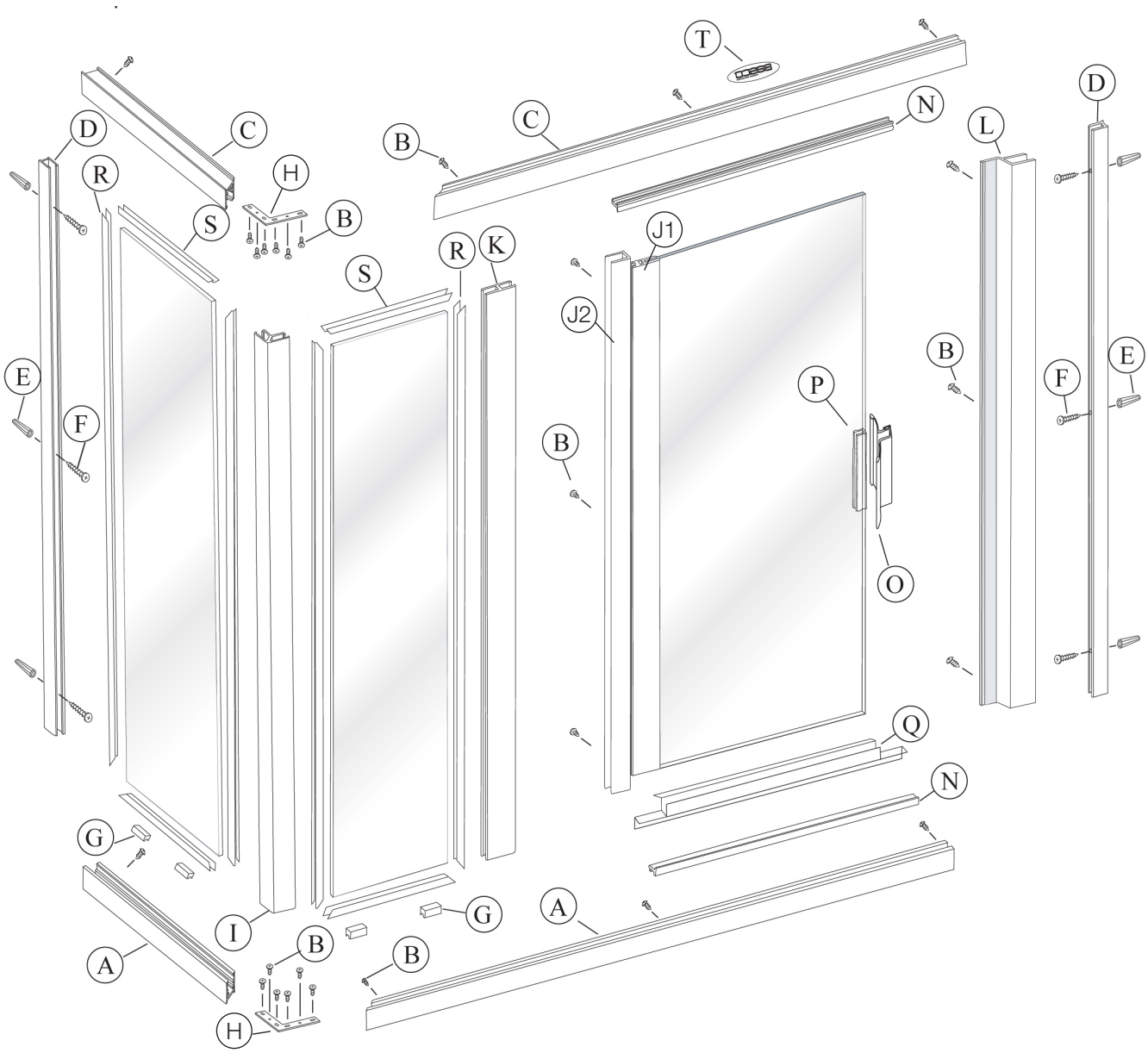

Notes

PPCLC02 Parts Pak Includes: Letters B, E, F, G, T
Fillers for out of plumb conditions:
SC553* for walls (vertical). SC543* for threshold (horizontal).

Door, Inline Panel & Return Panel

Semi-Frameless Classic (151)

Model # 151HI/751HI prior to Jan. 2018

Please refer to pages 94-95 for Legacy pivot hinge model.

151 Continuous Hinge Parts Listing

Part Letter	Part Number	Description	Qty/Unit	Length/Each	Chrome *(SV)*	Brushed Nickel *(BN)*, Oil Rubbed Bronze *(OR)*	All other finishes *(see below)*
A	SCX505B	Curb	(2)	Cut to Size	64.35	72.91	90.18
B	SCR02	#8 x 1/4" Truss Head Screw	(26)	Each	0.43	0.43	-
C	SCX505	Header	(2)	Cut to Size	57.35	67.13	85.60
D	SCX508	Wall Jamb	(2)	Cut to Size	53.24	69.16	82.11
E	SC4106	Plastic Wall Anchor	(6)	Each	0.29	-	-
F	SCR10	#8 x 1 1/2" Truss Head Screw	(6)	Each	0.43	0.43	-
G	SCV221	Plastic Setting Block	(4)	Each	0.72	-	-
H	SC4123	90° Anchor Plate	(2)	Each	11.76	-	-
I	SCX513	90° Corner Post	(1)	Cut to Size	78.57	107.56	112.68
J1	SCX651	Continuous Hinge Rail	(1)	Cut to Size	73.68	85.63	115.52
J2	SCX649	Continuous Hinge Jamb	(1)	Cut to Size	72.24	83.13	98.07
K	SCX511	180° Inline Post	(1)	Cut to Size	62.98	86.79	100.20
L	SCX552S	Strike Jamb w/ Strike Plate & Shim	(1)	Cut to Size	81.50	106.11	115.95
N	SCX507	Frameless Snap-in Fills	(2)	Cut to Size	47.41	58.83	64.70
O	SC3700	3" Handle w/Vinyl (P) & Strike Plate	(1)	Each	40.10	49.27	60.56
Q	SCV451-38	Clear Bottom Sweep	(1)	Cut to Size	4.52	-	-
R	SCV226	Vertical Glazing Vinyl (3/16" Glass)	(4)	Per Ft.	1.02	-	-
S	SCV225	Horizontal Glazing Vinyl (3/16" Glass)	(4)	Per Ft.	1.12	-	-
T	BAS-NP	Basco Name Plate	(1)	Each	1.10	-	-
	PPCLC02	3/16" Semi-FL Door/Panel Parts Pak		Each	28.37	36.28	45.10
	SC4030	Magnet for Strike Jamb		Each	19.99	-	-
	SCV257	8" Vinyl for Door Handle for 3/16"		Each	1.12	-	-
	SCV308	8" Vinyl for Door Handle for 1/4"		Each	1.12	-	-
	SCX543*	Curb Filler		Cut to Size	59.00	69.00	88.00
	SCX553*	1/2" Wall Filler		Cut to Size	43.00	53.00	72.00
	SCX590*	1" Wall Filler - Wall Jamb		Cut to Size	68.00	77.00	96.00

***Please specify taper if needed and add $45.00 (SCTAPERCHARGE).**

Finish Selections (Code)

Chrome (SV)	Brushed Nickel (BN), Oil Rubbed Bronze (OR)	Bronze (BR), Satin Nickel (SN), White (WP), Matte Black (WI)

Return Configurations

Swing Door, Inline Panel & Return Panel

Semi-Frameless Classic - Legacy Pivot Model (151/751)

To insure correct fit when ordering cut to size parts, please indicate complete original unit number.

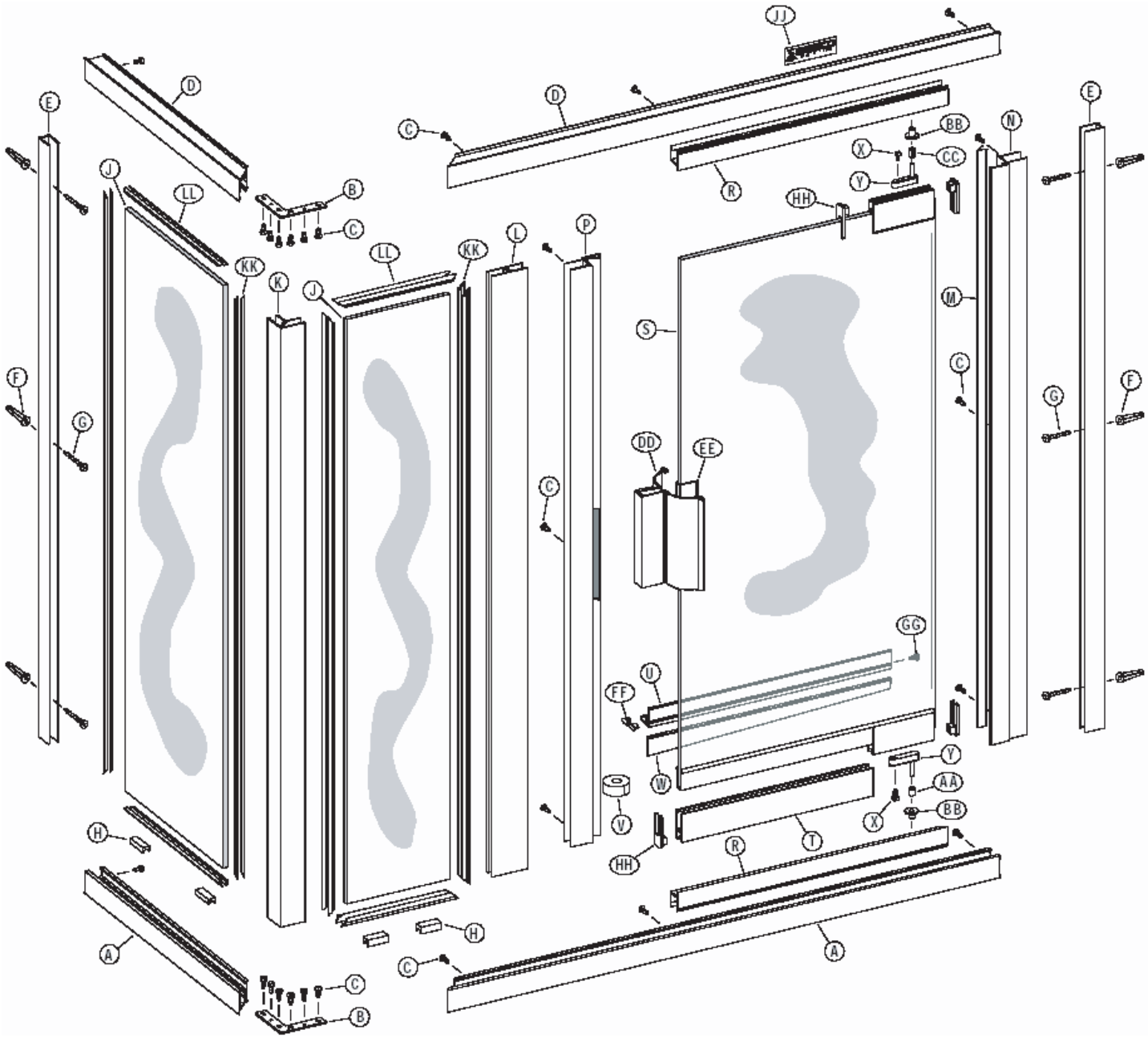

Notes

PPARM02 Parts Pak Includes: Letters C, F, G, H, V, W, X, Y, AA, BB, CC, FF, GG, HH, JJ
Fillers for out of plumb conditions:
SC553* for walls (vertical). SC543* for threshold (horizontal).

Swing Door, Inline Panel & Return Panel

Semi-Frameless Classic - Legacy Pivot Model (151/751)

151/751 Pivot Hinge Parts Listing

Part Letter	Part Number	Description	Qty/Unit	Length/Each	Chrome *(SV)*	Brushed Nickel *(BN)*, Oil Rubbed Bronze *(OR)*	All other finishes *(see below)*
A	SCX505B	Curb	(2)	Cut to Size	64.35	72.91	90.18
B	SC4123	90° Anchor Plate	(2)	Each	11.76	-	-
C	SCR02	#8 x 1/4" Truss Head Screw	(26)	Each	0.43	0.43	-
D	SCX505	Header	(2)	Cut to Size	57.35	67.13	85.60
E	SCX508	Wall Jamb	(2)	Cut to Size	53.24	69.16	82.11
F	SC4106	Plastic Wall Anchor	(6)	Each	0.29	-	-
G	SCR10	#8 x 1 1/2" Truss Head Screw	(6)	Each	0.43	0.43	-
H	SCV221	Plastic Setting Block	(4)	Each	0.72	-	-
K	SCX513	90° Corner Post	(1)	Cut to Size	78.57	107.56	112.68
L	SCX511	180° Inline Post	(1)	Cut to Size	62.98	86.79	100.20
M	SCV314-84	Pivot Jamb Vinyl	(1)	Each	6.00	-	-
N	SCX552P	Pivot Jamb w/ SCV314	(1)	Cut to Size	68.97	86.94	108.90
N	SCX552S	Strike Jamb w/ Strike Plate & Shim	(1)	Cut to Size	81.50	106.11	115.95
R	SCX507	Frameless Snap-in Fills	(2)	Cut to Size	47.41	58.83	64.70
T	SCX558	Bottom Rail	(1)	Cut to Size	39.45	55.03	60.54
U	SCX589	Drip Rail	(1)	Cut to Size	33.73	40.03	44.03
V	SC4248	Two Faced Tape	(1)	Each	3.89	-	-
W	SCV284	Tapered Drip Vinyl (37" pc.)	(1)	Each	3.51	-	-
X	SC5080	Square Head Set Screw	(2)	Each	1.22	-	-
Y	SC4252	Pivot Blocks w/ Pins	(2 of ea.)	Each	11.12	-	-
AA	SC4115	Nylon Spacer	(1)	Each	3.06	-	-
BB	SC4160	Nylon Washer/Pivot Bushings	(2)	Each	0.88	-	-
CC	SC8196	Security Washer	(1)	Each	0.47	-	-
DD	SC3700	3" Handle w/Vinyl (EE) & Strike Plate	(1)	Each	40.10	49.27	60.56
FF	SC4000	Drip Plug	(2)	Each	0.47	-	-
GG	SCR11	#6 x 3/8" Truss Head Screw	(1)	Each	0.43	-	-
HH	SC4040	Rail End Cap	(4)	Each	1.90	-	-
JJ	SC4531	Basco Decal	(1)	Each	1.02	-	-
KK	SCV226	Vertical Glazing Vinyl (3/16" Glass)	(8)	Per Ft.	1.02	-	-
LL	SCV225	Horizontal Glazing Vinyl (3/16" Glass)	(8)	Per Ft.	1.12	-	-
	PPARM02	Frameless Door & Panel Parts Pak		Each	28.37	36.28	45.10
	SC4030	Magnet for Strike Jamb		Each	19.99	-	-
	SCV257	8" Vinyl for Door Handle for 3/16"		Each	1.12	-	-
	SCV308	8" Vinyl for Door Handle for 1/4"		Each	1.12	-	-
	SCX543*	Curb Filler		Cut to Size	59.00	69.00	88.00
	SCX553*	1/2" Wall Filler		Cut to Size	43.00	53.00	72.00
	SCX590*	1" Wall Filler - Wall Jamb		Cut to Size	68.00	77.00	96.00

***Please specify taper if needed and add $45.00 (SCTAPERCHARGE). ** 3 1/2" Hole-to-Hole Handle dimension.**

Finish Selections (Code)

Chrome (SV)	Brushed Nickel (BN), Oil Rubbed Bronze (OR)	Bronze (BR), Satin Nickel (SN), White (WP), Matte Black (WI)

Return Configurations

Swing Door, Inline Panel & Return Panel

Framed Deluxe - Legacy Pivot Model (150/750)

To insure correct fit when ordering cut to size parts, please indicate complete original unit number.

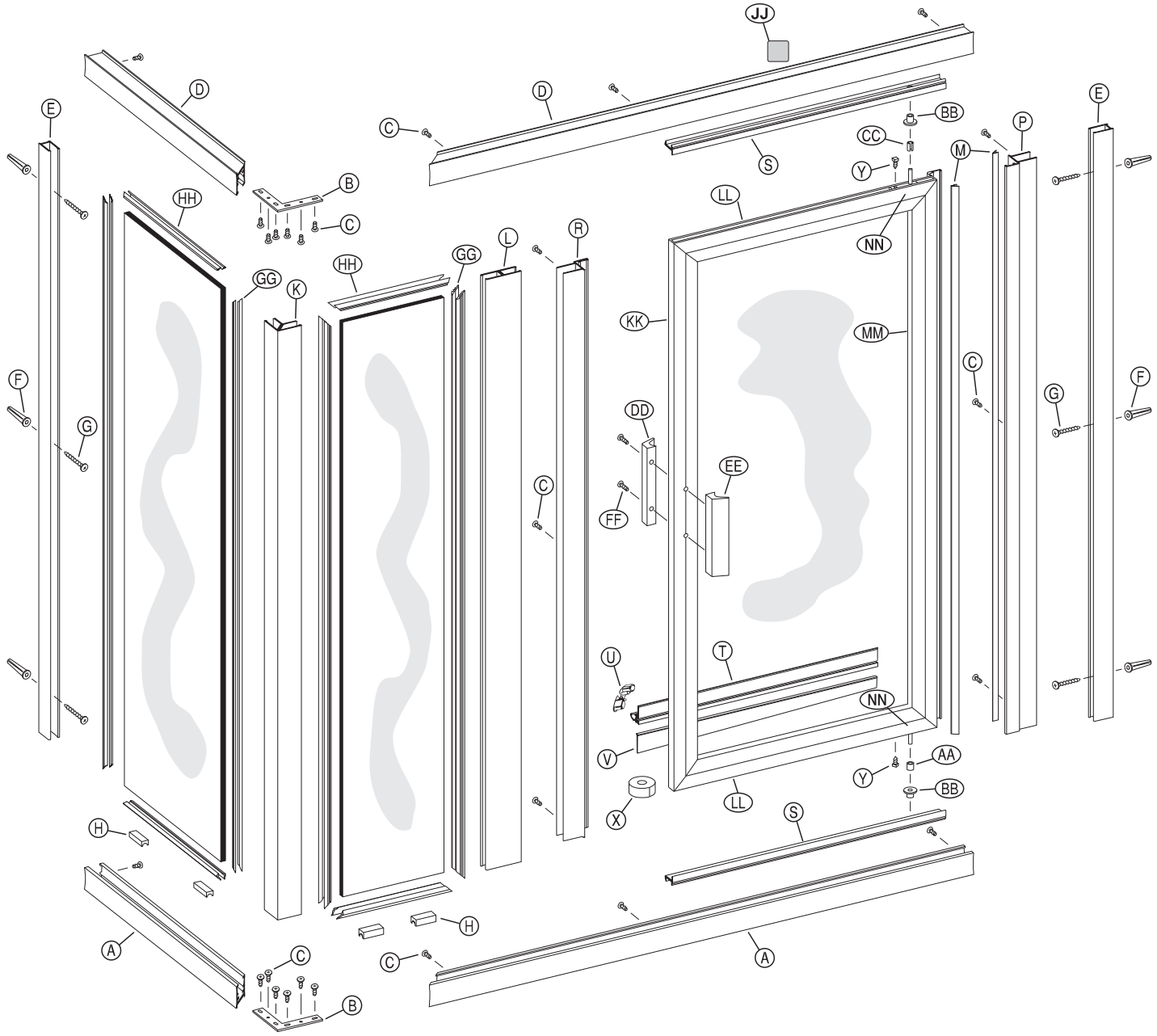

Notes

PPSOP02 Parts Pak Includes: Letters C, F, G, H, U, X, Y, AA, BB, CC, DD, EE, FF, JJ
Fillers for out of plumb conditions:
SC553* for walls (vertical). SC543* for threshold (horizontal).

Swing Door, Inline Panel & Return Panel

Framed Deluxe - Legacy Pivot Model (150/750)

150/750 Pivot Hinge Parts Listing

Part Letter	Part Number	Description	Qty/Unit	Length/Each	Chrome *(SV)*	Brushed Nickel *(BN)*, Oil Rubbed Bronze *(OR)*	All other finishes *(see below)*
A	SCX505B	Curb	(2)	Cut to Size	64.35	72.91	90.18
B	SC4123	90° Anchor Plate	(2)	Each	11.76	-	-
C	SCR02	#8 x 1/4" Truss Head Screw	(26)	Each	0.43	0.43	-
D	SCX505	Header	(2)	Cut to Size	57.35	67.13	85.60
E	SCX508	Wall Jamb	(2)	Cut to Size	53.24	69.16	82.11
F	SC4106	Plastic Wall Anchor	(6)	Each	0.29	-	-
G	SCR10	#8 x 1 1/2" Truss Head Screw	(6)	Each	0.43	0.43	-
H	SCV221	Plastic Setting Block	(4)	Each	0.72	-	-
K	SCX513	90° Corner Post	(1)	Cut to Size	78.57	107.56	112.68
L	SCX511	180° Inline Post	(1)	Cut to Size	62.98	86.79	100.20
M	SCV266	Pivot Jamb Vinyl/Pivot Rail Vinyl	(1)	Per Pc.	1.19	-	-
P	SCX533	Pivot Jamb w/SCV266 Vinyl	(1)	Cut to Size	66.55	82.28	95.59
R	SCX522	Strike Jamb w/SCV253 (Magnet)	(1)	Cut to Size	73.50	95.24	124.05
S	SCX506	Snap-in Filler	(2)	Cut to Size	34.79	41.39	45.53
T	SCX589	Drip Rail	(1)	Cut to Size	33.73	40.03	44.03
U	SC4000	Drip Plug	(1)	Each	0.47	-	-
V	SCV284	Tapered Drip Vinyl (37" pc.)	(1)	Each	3.51	-	-
X	SC4248	Two Faced Tape	(1)	Each	3.89	-	-
Y	SC5080	Square Head Set Screw	(2)	Each	1.22	-	-
AA	SC4115	Nylon Spacer	(1)	Each	3.06	-	-
BB	SC4160	Nylon Washer	(2)	Each	0.88	-	-
CC	SC8196	Security Washer	(1)	Each	0.47	-	-
DD EE	SC3317**	5" Exterior & Interior Handle	(1 Set)	Each	24.86	39.18	46.27
FF	SCR06	#6 x 1 1/4" Handle Screw	(2)	Each	0.43	-	-
GG	SCV226	Vertical Glazing Vinyl (3/16" Glass)	(4)	Per Ft.	1.02	-	-
HH	SCV225	Horizontal Glazing Vinyl (3/16" Glass)	(4)	Per Ft.	1.12	-	-
JJ	SC4531	Basco Decal	(1)	Each	1.02	-	-
KK	SCX549	Strike Side Rail w/ Magnet (SCV253)	(1)	Cut to Size	76.71	91.52	107.68
LL	SCX899	Top or Bottom Door Rail	(2)	Cut to Size	49.45	67.08	73.80
MM	SCX582	Pivot Side Rail	(1)	Cut to Size	82.85	105.27	134.31
NN	SC4252	Pivot Block with Pin	(2 of ea)	Each	11.12	-	-
	PPSOP02	Parts Pak for 145 or 745		Each	35.78	45.95	52.28
	SCX543*	Curb Filler		Cut to Size	59.00	69.00	88.00
	SCX553*	1/2" Wall Filler		Cut to Size	43.00	53.00	72.00

***Please specify taper if needed and add $45.00 (SCTAPERCHARGE). ** 3 1/2" Hole-to-Hole Handle dimension.**

Finish Selections (Code)

Chrome (SV)	Brushed Nickel (BN), Oil Rubbed Bronze (OR)	Bronze (BR), Satin Nickel (SN), White (WP), Matte Black (WI)

Neo Angle Configurations

Neo Angle

Semi-Frameless Classic (161)

Model # 161HI/761HI prior to Jan. 2018

Please refer to pages 100-101 for Legacy pivot hinge model.

To insure correct fit when ordering cut to size parts, please indicate complete original unit number.

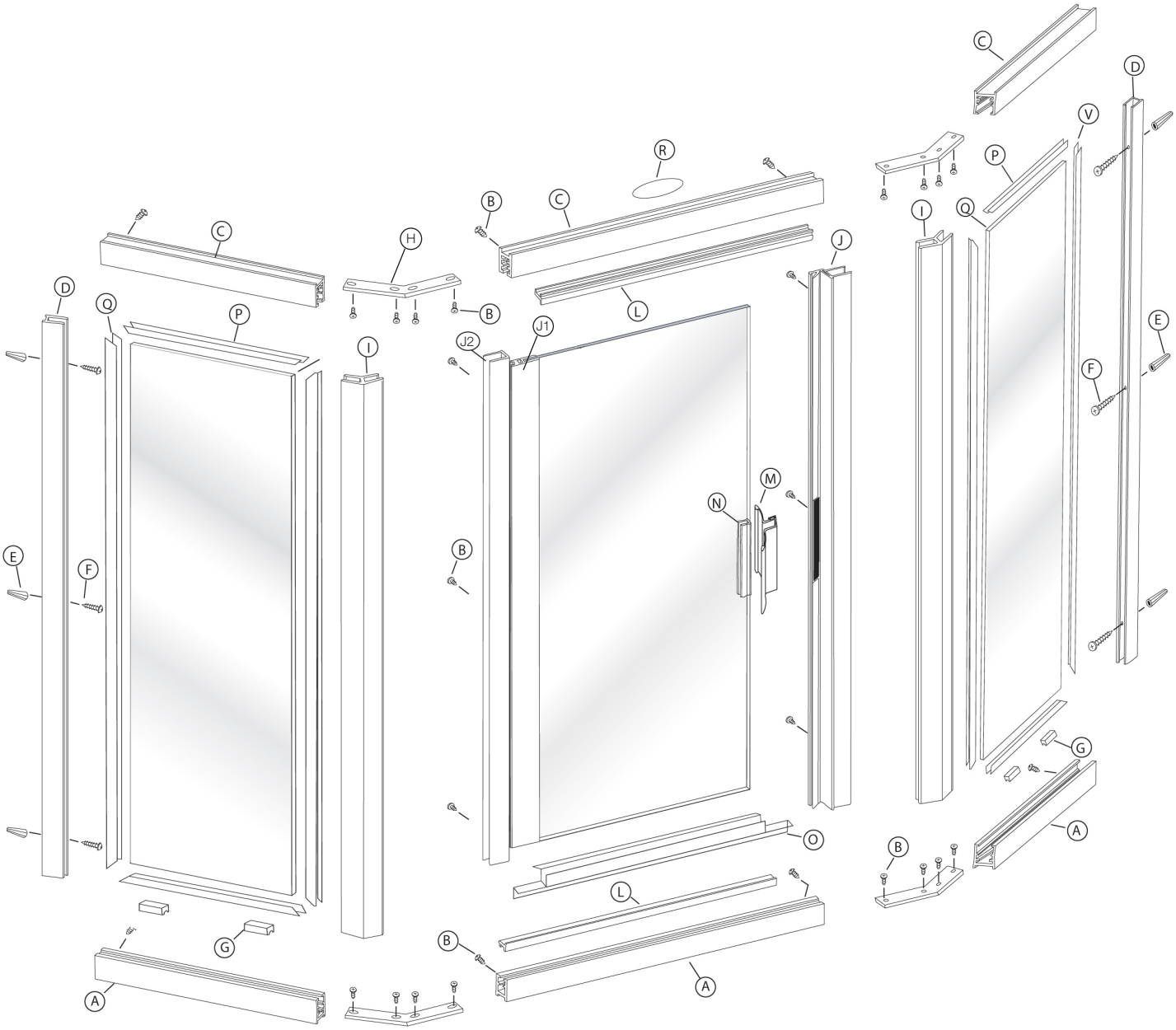

Notes

PPCLC02 Parts Pak Includes: Letters B, E, F, G
Fillers for out of plumb conditions:
SC553* for walls (vertical). SC543* for threshold (horizontal).

Neo Angle

Semi-Frameless Classic (161)

Model # 161HI/761HI prior to Jan. 2018

Please refer to pages 100-101 for Legacy pivot hinge model.

161 Continuous Hinge Parts Listing

Part Letter	Part Number	Description	Qty/Unit	Length/Each	Chrome *(SV)*	Brushed Nickel *(BN)*, Oil Rubbed Bronze *(OR)*	All other finishes *(see below)*
A	SCX505B	Curb	(3)	Cut to Size	64.35	72.91	90.18
B	SCR02	#8 x 1/4" Truss Head Screw	(48)	Each	0.43	0.43	-
C	SCX505	Header	(3)	Cut to Size	57.35	67.13	85.60
D	SCX508	Wall Jamb	(2)	Cut to Size	53.24	69.16	82.11
E	SC4106	Plastic Wall Anchor	(6)	Each	0.29	-	-
F	SCR10	#8 x 1 1/2" Truss Head Screw	(6)	Each	0.43	0.43	-
G	SCV221	Plastic Setting Block	(4)	Each	0.72	-	-
H	SC4124	135° Anchor Plate	(4)	Each	6.60	-	-
I	SCX512	135° Post	(2)	Cut to Size	72.35	87.89	96.97
J	SCX552S	Strike Jamb w/ Strike Plate & Shim	(1)	Cut to Size	81.50	106.11	115.95
K1	SCX651	Continuous Hinge Rail	(1)	Cut to Size	73.68	85.63	115.52
K2	SCX649	Continuous Hinge Jamb	(1)	Cut to Size	72.24	83.13	98.07
L	SCX506	Snap-in Filler	(2)	Cut to Size	34.79	41.39	45.53
M	SC3700	3" Handle w/Vinyl (N) & Strike Plate	(1)	Each	40.10	49.27	60.56
O	SCV451-38	Clear Bottom Sweep	(1)	Cut to Size	4.52	-	-
P	SCV225	Horizontal Glazing Vinyl (3/16" Glass)	(4)	Per Ft.	1.12	-	-
Q	SCV226	Vertical Glazing Vinyl (3/16" Glass)	(4)	Per Ft.	1.02	-	-
R	BAS-NP	Basco Name Plate	(1)	Each	1.10	-	-
	PPCLC02	3/16" Classic Door/Panel Parts Pak		Each	28.37	36.28	45.10
	SC4030	Magnet for Strike Jamb		Each	19.99	-	-
	SCV257	8" Vinyl for Door Handle for 3/16"		Each	1.12	-	-
	SCV308	8" Vinyl for Door Handle for 1/4"		Each	1.12	-	-
	SCX543*	Curb Filler		Cut to Size	59.00	69.00	88.00
	SCX553*	1/2" Wall Filler		Cut to Size	43.00	53.00	72.00
	SCX590*	1" Wall Filler - Wall Jamb		Cut to Size	68.00	77.00	96.00

Please specify taper if needed and add $45.00 (SCTAPERCHARGE).

Finish Selections (Code)

Chrome (SV)	Brushed Nickel (BN), Oil Rubbed Bronze (OR)	Bronze (BR), Satin Nickel (SN), White (WP), Matte Black (WI)

Neo Configurations

Neo Angle Swing Door

Semi-Frameless Classic - Legacy Pivot Model (161/761)

To insure correct fit when ordering cut to size parts, please indicate complete original unit number.

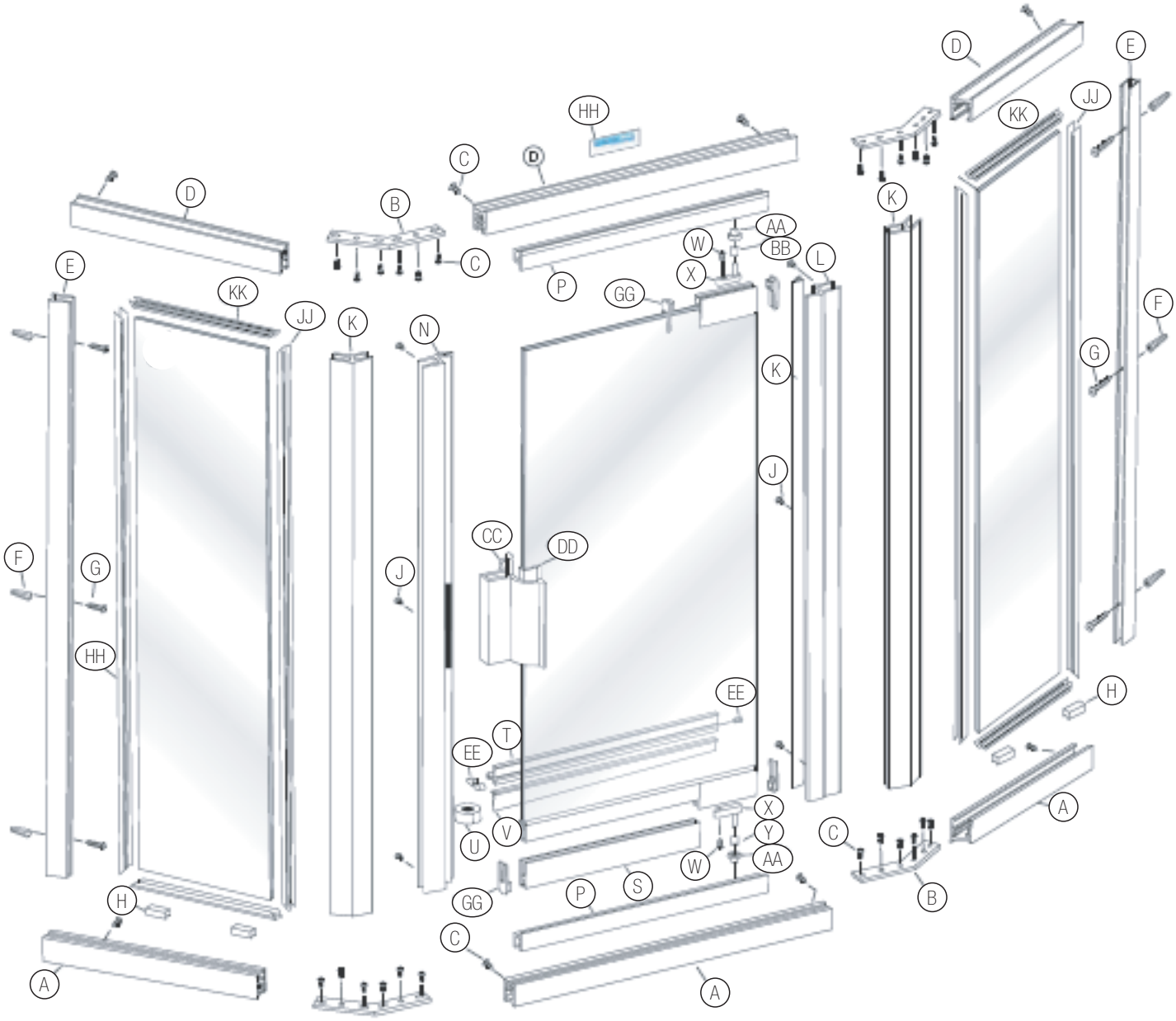

Notes

PPARM02 Parts Pak Includes: Letters C, F, G, H, U, W, X, Y, AA, BB, EE, GG
Fillers for out of plumb conditions:
SC553* for walls (vertical). SC543* for threshold (horizontal).

Neo Angle Swing Door

Semi-Frameless Classic - Legacy Pivot Model (161/761)

161/761 Pivot Hinge Parts Listing

Part Letter	Part Number	Description	Qty/Unit	Length/Each	Chrome *(SV)*	Brushed Nickel *(BN)*, Oil Rubbed Bronze *(OR)*	All other finishes *(see below)*
A	SCX505B	Curb	(3)	Cut to Size	64.35	72.91	90.18
B	SC4124	135° Anchor Plate	(4)	Each	6.60	-	-
C	SCR02	#8 x 1/4" Truss Head Screw	(48)	Each	0.43	0.43	-
D	SCX505	Header	(3)	Cut to Size	57.35	67.13	85.60
D	SCX508	Wall Jamb	(2)	Cut to Size	53.24	69.16	82.11
F	SC4106	Plastic Wall Anchor	(6)	Each	0.29	-	-
G	SCR10	#8 x 1 1/2" Truss Head Screw	(6)	Each	0.43	0.43	-
H	SCV221	Plastic Setting Block	(4)	Each	0.72	-	-
K	SCX512	135° Post	(2)	Cut to Size	72.35	87.89	96.97
L	SCV314-84	Pivot Jamb Vinyl	(1)	Each	6.00	-	-
M	SCX552P	Pivot Jamb w/ SCV314	(1)	Cut to Size	68.97	86.94	108.90
N	SCX552S	Strike Jamb w/ Strike Plate & Shim	(1)	Cut to Size	81.50	106.11	115.95
P	SCX506	Snap-in Filler	(2)	Cut to Size	34.79	41.39	45.53
S	SCX558	Bottom Rail	(1)	Cut to Size	39.45	55.03	60.54
T	SCX589	Drip Rail	(1)	Cut to Size	33.73	40.03	44.03
U	SC4248	Two Faced Tape	(1)	Each	3.89	-	-
V	SCV284	Tapered Drip Vinyl (37" pc.)	(1)	Each	3.51	-	-
W	SC5080	Square Head Set Screw	(2)	Each	1.22	-	-
X	SC4252	Pivot Block with Pin	(2 of ea)	Each	11.12	-	-
Y	SC4115	Nylon Spacer	(1)	Each	3.06	-	-
AA	SC4160	Nylon Washer	(2)	Each	0.88	-	-
BB	SC8196	Security Washer	(1)	Each	0.47	-	-
CC	SC3700	3" Handle w/Vinyl (DD) & Strike Plate	(1)	Each	40.10	49.27	60.56
EE	SC4000	Drip Plug	(1)	Each	0.47	-	-
FF	SCR11	#6 x 3/8" Truss Head Screw	(1)	Each	0.43	-	-
GG	SC4040	Rail End Cap	(4)	Each	1.90	-	-
HH	SC4531	Basco Decal	(1)	Each	1.02	-	-
JJ	SCV226	Vertical Glazing Vinyl (3/16" Glass)	(8)	Per Ft.	1.02	-	-
KK	SCV225	Horizontal Glazing Vinyl (3/16" Glass)	(4)	Per Ft.	1.12	-	-
	PPARM02	Parts Pak		Each	28.37	36.28	45.10
	SCX543*	Curb Filler		Cut to Size	59.00	69.00	88.00
	SCX553*	1/2" Wall Filler		Cut to Size	43.00	53.00	72.00

***Please specify taper if needed and add $45.00 (SCTAPERCHARGE). ** 3 1/2" Hole-to-Hole Handle dimension.**

Finish Selections (Code)

Chrome (SV)	Brushed Nickel (BN), Oil Rubbed Bronze (OR)	Bronze (BR), Satin Nickel (SN), White (WP), Matte Black (WI)

Neo Angle Swing Door

Framed Deluxe - Legacy Pivot Model (160/760)

To insure correct fit when ordering cut to size parts, please indicate complete original unit number.

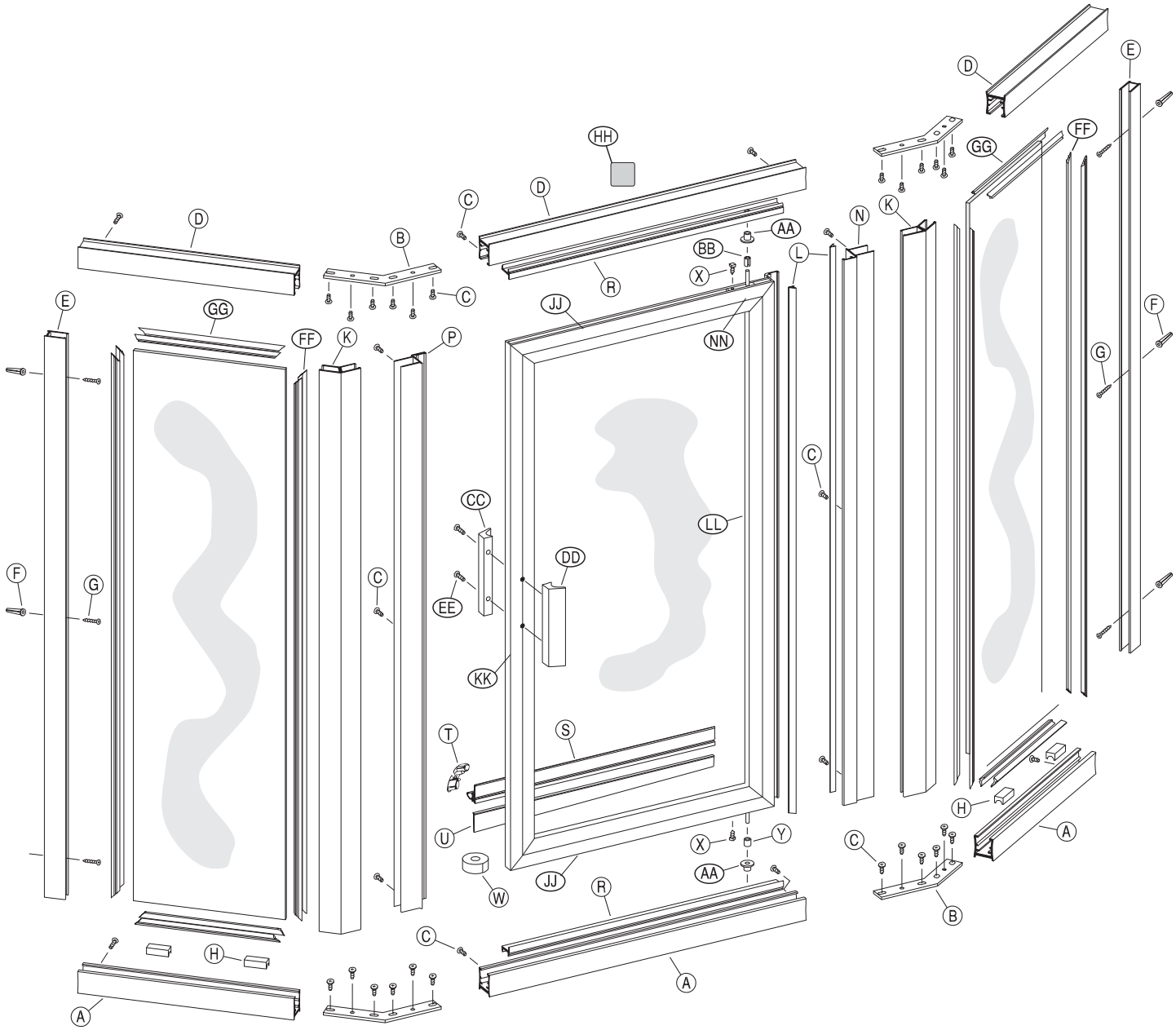

Notes

PPSOP02 Parts Pak Includes: Letters C, F, G, T, W, X, Y, AA, BB, CC, DD, EE
Fillers for out of plumb conditions:
SC553* for walls (vertical). SC543* for threshold (horizontal).

Neo Angle Swing Door

Framed Deluxe - Legacy Pivot Model (160/760)

160/760 Pivot Hinge Parts Listing

Part Letter	Part Number	Description	Qty/Unit	Length/Each	Chrome *(SV)*	Brushed Nickel *(BN)*, Oil Rubbed Bronze *(OR)*	All other finishes *(see below)*
A	SCX505B	Curb	(3)	Cut to Size	64.35	72.91	90.18
B	SC4124	135° Anchor Plate	(4)	Each	6.60	-	-
C	SCR02	#8 x 1/4" Truss Head Screw	(26)	Each	0.43	0.43	-
D	SCX505	Header	(3)	Cut to Size	57.35	67.13	85.60
E	SCX508	Wall Jamb	(2)	Cut to Size	53.24	69.16	82.11
F	SC4106	Plastic Wall Anchor	(6)	Each	0.29	-	-
G	SCR10	#8 x 1 1/2" Truss Head Screw	(6)	Each	0.43	0.43	-
H	SCV221	Plastic Setting Block	(4)	Each	0.72	-	-
K	SCX512	135° Post	(2)	Cut to Size	72.35	87.89	96.97
L	SCV266	Pivot Jamb Vinyl/Pivot Rail Vinyl	(1)	Per Pc.	1.19	-	-
N	SCX533	Pivot Jamb w/SCV266 Vinyl	(1)	Cut to Size	66.55	82.28	95.59
P	SCX522	Strike Jamb w/SCV253 (Magnet)	(1)	Cut to Size	73.50	95.24	124.05
R	SCX506	Snap-in Filler	(2)	Cut to Size	34.79	41.39	45.53
S	SCX589	Drip Rail	(1)	Cut to Size	33.73	40.03	44.03
T	SC4000	Drip Plug	(1)	Each	0.47	-	-
U	SCV284	Tapered Drip Vinyl (37" pc.)	(1)	Each	3.51	-	-
W	SC4248	Two Faced Tape	(1)	Each	3.89	-	-
X	SC5080	Square Head Set Screw	(2)	Each	1.22	-	-
Y	SC4115	Nylon Spacer	(1)	Each	3.06	-	-
AA	SC4160	Nylon Washer	(2)	Each	0.88	-	-
BB	SC8196	Security Washer	(1)	Each	0.47	-	-
CC DD	SC3317**	5" Exterior & Interior Handle	(1 Set)	Each	24.86	39.18	46.27
EE	SCR06	#6 x 1 1/4" Handle Screw	(2)	Each	0.43	-	-
FF	SCV226	Vertical Glazing Vinyl (3/16" Glass)	(4)	Per Ft.	1.02	-	-
GG	SCV225	Horizontal Glazing Vinyl (3/16" Glass)	(4)	Per Ft.	1.12	-	-
HH	SC4531	Basco Decal	(1)	Each	1.02	-	-
JJ	SCX899	Top or Bottom Door Rail	(2)	Cut to Size	49.45	67.08	73.80
KK	SCX549	Strike Side Rail w/ Magnet (SCV253)	(1)	Cut to Size	76.71	91.52	107.68
LL	SCX582	Pivot Side Rail	(1)	Cut to Size	82.85	105.27	134.31
NN	SC4252	Pivot Block with Pin	(2 of ea)	Each	11.12	-	-
	PPSOP02	Parts Pak for 160 or 760		Each	35.78	45.95	52.28
	SCX543*	Curb Filler		Cut to Size	59.00	69.00	88.00
	SCX553*	1/2" Wall Filler		Cut to Size	43.00	53.00	72.00

***Please specify taper if needed and add $45.00 (SCTAPERCHARGE). ** 3 1/2" Hole-to-Hole Handle dimension.**

Finish Selections (Code)

Chrome (SV)	Brushed Nickel (BN), Oil Rubbed Bronze (OR)	Bronze (BR), Satin Nickel (SN), White (WP), Matte Black (WI)

Neo Angle Quick-N-Stall Swing Door

Framed Deluxe - Legacy Pivot Model (160QNS)

To insure correct fit when ordering cut to size parts, please indicate complete original unit number.

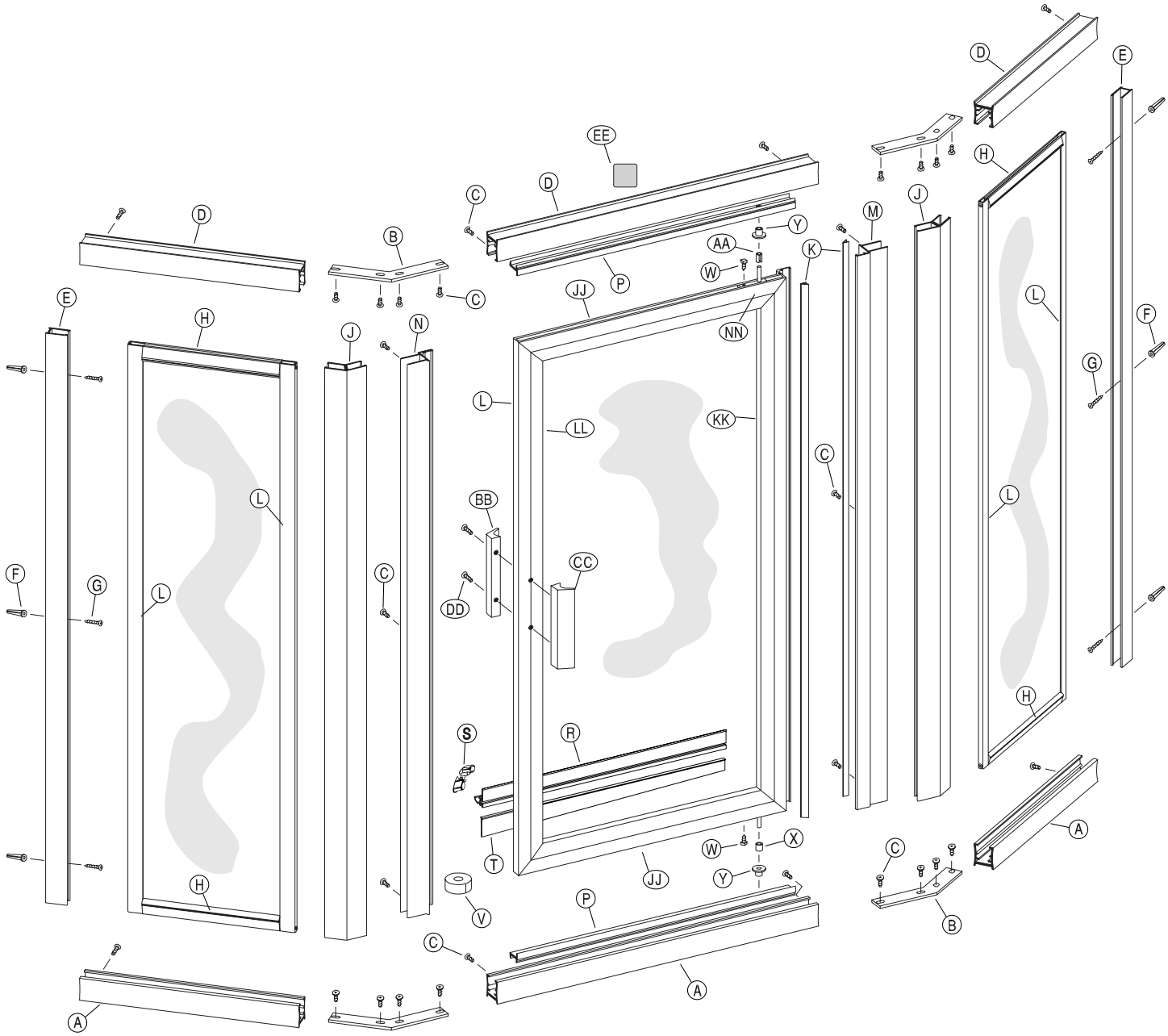

Notes

PPSOP02 Parts Pak Includes: Letters C, F, G, S, V, W, X, Y, AA, BB, CC, DD
Fillers for out of plumb conditions:
SC553* for walls (vertical). SC543* for threshold (horizontal).

Neo Angle Quick-N-Stall Swing Door

Framed Deluxe - Legacy Pivot Model (160QNS)

160QNS Pivot Hinge Parts Listing

Part Letter	Part Number	Description	Qty/Unit	Length/Each	Chrome *(SV)*	Brushed Nickel *(BN)*, Oil Rubbed Bronze *(OR)*	All other finishes *(see below)*
A	SCX505B	Curb *(Double Punched)*	(3)	Cut to Size	64.35	72.91	90.18
B	SC4124	135° Anchor Plate	(4)	Each	6.60	-	-
C	SCR02	#8 x 1/4" Truss Head Screw	(24)	Each	0.43	0.43	-
D	SCX505	Header	(3)	Cut to Size	57.35	67.13	85.60
E	SCX508	Wall Jamb	(2)	Cut to Size	53.24	69.16	82.11
F	SC4106	Plastic Wall Anchor	(6)	Each	0.29	-	-
G	SCR10	#8 x 1 1/2" Truss Head Screw	(6)	Each	0.43	0.43	-
H	SCV315	Panel Top and Bottom	(4)	Per Ft.	0.72		
J	SCX512	135° Post	(2)	Cut to Size	72.35	87.89	96.97
K	SCV266	Pivot Jamb Vinyl/Pivot Rail Vinyl	(7)	Per Pc.	1.19	-	-
L	SCX620	Panel Side Rail	(4)	Cut to Size	47.41	64.03	70.43
M	SCX533	Pivot Jamb w/SCV266 Vinyl	(1)	Cut to Size	66.55	82.28	95.59
N	SCX522	Strike Jamb w/SCV253 (Magnet)	(1)	Cut to Size	73.50	95.24	124.05
P	SCX506	Snap-in Filler	(2)	Cut to Size	34.79	41.39	45.53
R	SCX589	Drip Rail	(1)	Cut to Size	33.73	40.03	44.03
S	SC4000	Drip Plug	(1)	Each	0.47	-	-
T	SCV284	Tapered Drip Vinyl (37" pc.)	(1)	Each	3.51	-	-
V	SC4248	Two Faced Tape	(1)	Each	3.89	-	-
W	SC5080	Square Head Set Screw	(2)	Each	1.22	-	-
X	SC4115	Nylon Spacer	(1)	Each	3.06	-	-
Y	SC4160	Nylon Washer	(2)	Each	0.88	-	-
AA	SC8196	Security Washer	(1)	Each	0.47	-	-
BB CC	SC3317**	5" Exterior & Interior Handle	(1 Set)	Each	24.86	39.18	46.27
DD	SCR06	#6 x 1 1/4" Handle Screw	(2)	Each	0.43	-	-
EE	SC4531	Basco Decal	(1)	Each	1.02	-	-
JJ	SCX899	Top or Bottom Door Rail	(2)	Cut to Size	49.45	67.08	73.80
KK	SCX582	Pivot Side Rail	(1)	Cut to Size	82.85	105.27	134.31
LL	SCX549	Strike Side Rail w/ Magnet (SCV253)	(1)	Cut to Size	76.71	91.52	107.68
NN	SC4252	Pivot Block with Pin	(2 of ea)	Each	11.12	-	-
	PPSOP02	Parts Pak for 160 or 760		Each	35.78	45.95	52.28
	SCX543*	Curb Filler		Cut to Size	59.00	69.00	88.00
	SCX553*	1/2" Wall Filler		Cut to Size	43.00	53.00	72.00

***Please specify taper if needed and add $45.00 (SCTAPERCHARGE).**
**** 3 1/2" Hole-to-Hole Handle dimension.**

Finish Selections (Code)

Chrome (SV)	Brushed Nickel (BN), Oil Rubbed Bronze (OR)	Bronze (BR), Satin Nickel (SN), White (WP), Matte Black (WI)

SHOWER ENCLOSURES
7201 Snider Road
Mason, OH 45040
800.45-BASCO *(800.452.2726)*
800.989.1919 fax