Galvanized Tanks

Sizes from 12 to 900 gallons - 75 psi, non-ASME

Volume, Dimension and Weight Specifications

12 to 120 gallons

MODEL NUMBER	VOLUME (GALS)	DIMENSIONS IN INCHES					SHIP WEIGHT (LBS.)
		A	B	C	D	E	
PZ-12	12	26 1/2	24	12	5	13	27
PZ-21	21	26 7/8	24	16	5	13	45
PZ-32	32	38 3/4	36	16	8	17	52
PZ-42-T	42	51	48	16	12	26	71
PZ-42-S	42	33 5/8	30	20	8	17	71
PZ-82	82	63	60	20	12	33	114
PZ-120	120	64 1/2	60	24	12	33	154

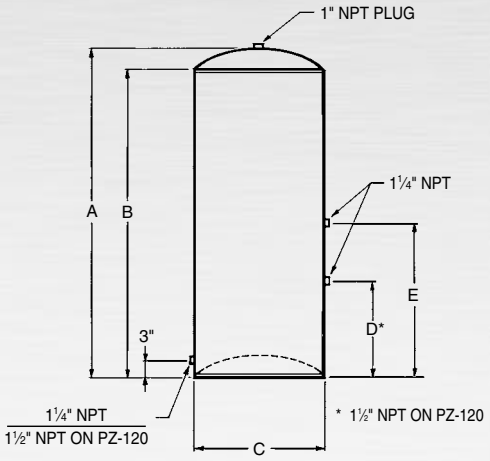

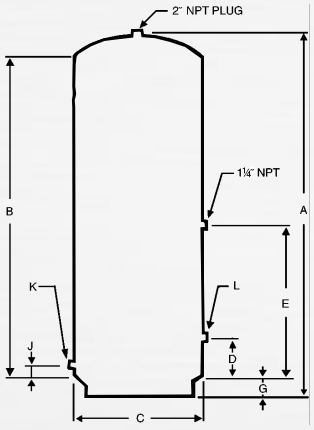

220 to 480 gallons

MODEL NUMBER	VOLUME (GALS)	DIMENSIONS IN INCHES									SHIP WEIGHT (LBS.)
		A	B	C	D	E	G	J	K	L	
PZ-220	220	78	66	30	6	32	6	2 1/2	2	2	303
PZ-315	315	79 1/2	66	36	6	32	7	2 1/2	2	2	416
PZ-480	480	87	72	42	6	32	7 1/2	2 1/2	2	3	640

WORKING PRESSURE - 75 psi
1/2" NPT "H" SPUDS NOT ON PZ-220 AND PZ-315.

525 to 900 gallons

MODEL NUMBER	VOLUME (GALS)	DIMENSIONS IN INCHES									SHIP WEIGHT (LBS.)
		A	B	C	D	E	F	G	H	J	
*PZU-525	525	131	114	36	6	56	2 1/2	2 1/2	4	2" NPT	685
*PZU-900	900	161	144	42	14	69	4	4	9	3" NPT	1040

*NOTE: PZU models are universal and can be installed horizontally or vertically.

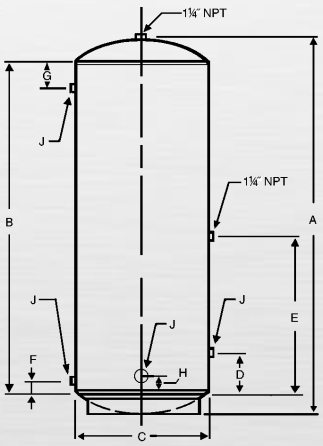

Certified to NSF/ANSI 61-G and 372

A. O. Smith reserves the right to make product changes or improvements at any time without notice.

WATER SYSTEMS
An A. O. Smith Company

©2020 A. O. Smith Water Systems | Printed in U.S.A

For more information on Galvanized Tanks, contact:
Water Systems - An A. O. Smith Company
125 Southeast Pkwy Franklin, TN 37064
800-365-4300 www.wstanks.com