MEGATEK®

Portable CD Player with Bluetooth

CB-M25BT

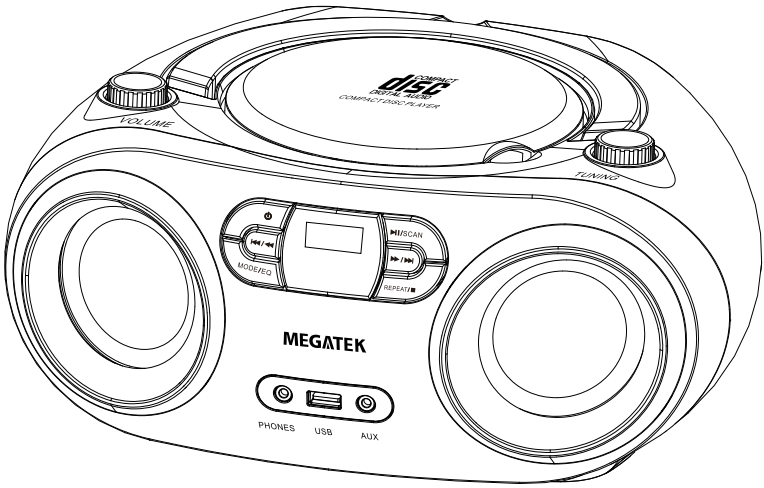

USER´S MANUAL

To assure the product to work in best status
Please read the user's manual carefully before operation and keep it well for future use

Contents

Welcome 01
Safety information 01
Features 03
Setting up your boombox 06
Disc (audio CD and MP3/WMA CD) notes 07
Using your boombox 08
Troubleshooting 14
Maintaining your boombox 15
Specifications 17
Legal notices 17
12 months warranty 18

Welcome

Congratulations on your purchase of a high-quality Megatek product. Your CB-M25BT is designed for reliable and trouble free performance, we wish you great satisfaction in using it.

Safety information

To prevent fire or shock hazard, do not plug the power cord into an extension cord, receptacle, or other outlet unless the blades can be fully inserted to prevent blade exposure. To prevent fire or shock hazard, do not expose this boombox to rain or moisture.

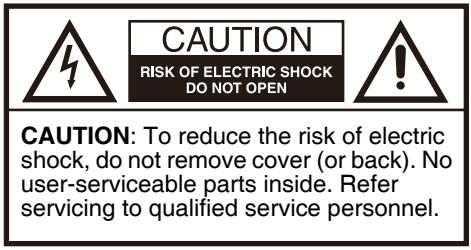



The lightning flash with arrowhead symbol within a triangle is intended to alert you to the presence of uninsulated dangerous voltage within your boombox's enclosure that may be of sufficient magnitude to constitute risk of electric shock to persons.

The exclamation point within a triangle is intended to alert you to the presence of important operating and maintenance (servicing) instructions in the literature accompanying your boombox.



Your boombox uses a Class 1 laser to read Compact Discs. Your boombox is equipped with safety switches to avoid exposure when the CD door is open and the safety interlocks are defeated. Invisible laser radiation is present when the CD door is open and the system's interlock has failed or been defeated. You should avoid direct exposure to the laser beam at all times. Do not attempt to defeat or bypass the safety switches.

WARNING: To reduce the risk of fire or electric shock, do not expose your boombox to rain or moisture.

WARNING: Any use of the controls or an adjustment to the procedures other than those specified herein may result in hazardous radiation.

CAUTION: Your boombox should not be exposed to water (dripping or splashing) and no objects filled with liquids, such as vases, should be placed on it.

Read instructions

Read all of the safety and operating instructions before you use your boombox.

Retain instructions

Retain the safety and operating instructions for future reference.

Follow warnings and instructions

Follow all warnings on your boombox and in the operating instructions. Follow all operating and use instructions.

Placement

When placing your boombox on a lacquered or natural finish, protect your furniture with a cloth or other protective material.

Avoid exposure to direct sunlight, temperature extremes, and moisture.

Ventilation

Slots and openings in the cabinet and the back or bottom are provided for ventilation, reliable operation, and protection from overheating. These openings must not be blocked or covered. Do not block the openings by placing your boombox on a bed, sofa, rug, or other similar surface.

Water and moisture

Do not use your boombox near water. For example, do not use it near a bath tub, wash bowl, kitchen sink, or laundry tub, in a wet basement, or near a swimming pool.

Do not let water splash or drip onto your boombox. Do not place objects containing liquids, such as a vase, on top of your boombox.

Disconnecting power

Unplug this apparatus during lightning storms or when unused for long periods of time.

The rating label of the boombox is located on the bottom.

Features

- Features Bluetooth, FM radio, CD player, USB player, and 3.5 mm auxiliary input for the ultimate playback flexibility
- Blue backlit display for input and status
- Powerful stereo speakers , along with a headphone jack for private listening
- 30 preset stations for FM radio
- CD player plays CD-R/RW media
- Can be powered by AC or 4 UM-2 ("C") batteries (not included)
- Compact form factor allows for easy transportation and fits in tight spaces
- Battery playtime:
  CD player: up to 2 hours
  FM radio/USB player/Aux input: up to 10 hours

NOTES: Playtime varies with volume, music contents, and capacity of your batteries etc.

Package contents:

- Boombox
- AC Cord
- User's Manual
- Quick Start Guide
- 3.5mm AUX Cable

Front panel

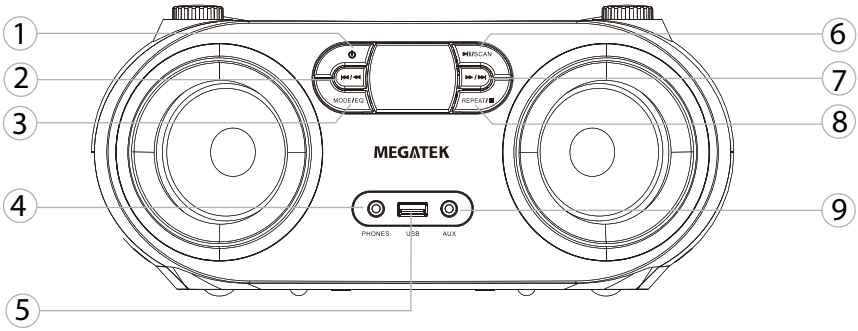

#	ITEM	DESCRIPTION
1	⏻ Standby/ON button	Press to turn on your boombox. Press again to return your boombox to standby mode.
2	⏮/◀◀ (previous/fast reverse) button	In radio mode, press to skip to the previous lower preset station, or press and hold to tune to the previous lower station. In CD or USB mode, press to skip to the previous track, or press and hold to search backward. In Bluetooth mode, press to skip to the previous track.
3	MODE/EQ (mode/equalization) button	Press to cycle through the sound sources (**CD>USB>AUX>BT>RADIO**). Press and hold to select a specific sound field (equalization). Selections include **Classic**, **Rock**, **Pop**, **Jazz**, **and Flat**.
4	Headphone jack	Connect headphones to this jack to listen to radio/playback through your headphones.
5	USB port	Connect a USB flash drive to this port to play files on the device.
6	⏯/SCAN (play/pause/scan) button	Press to begin CD, USB, or Bluetooth playback. Press again to pause playback. In radio mode, press to search FM stations from low to high. The searched stations are saved automatically as presets.
7	▶▶/⏭ (next/fast forward) button	In radio mode, press to skip to the next higher preset station, or press and hold to tune to the next higher station. In CD or USB mode, press to skip to the next track, or press and hold to search forward. In Bluetooth mode, press to skip to the next track.
8	REPEAT/■ (repeat/stop) button	In CD or USB mode, press once to repeat the current song, press twice to repeat all tracks, press a third time to play all tracks in random order, press a fourth time to cancel Repeat mode, or press and hold to stop playback.
9	AUX IN jack	Connect an external audio device to this jack.

Top panel

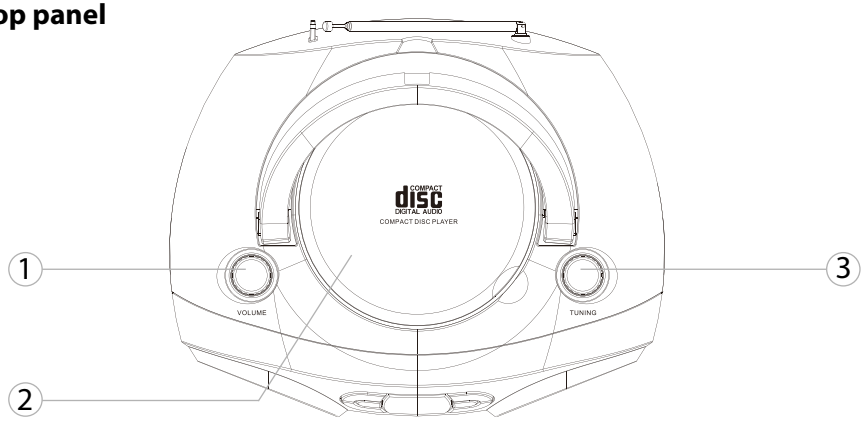

#	ITEM	DESCRIPTION
1	**VOLUME** knob	Turn clockwise to raise the volume or counterclockwise to lower the volume.
2	CD lid	Open the CD lid to place the CD in the disc compartment, label side up, close it to begin playback.
3	**TUNING** knob	Turn clockwise to tune the FM radio to a higher frequency or counterclockwise to a lower frequency.

Back panel

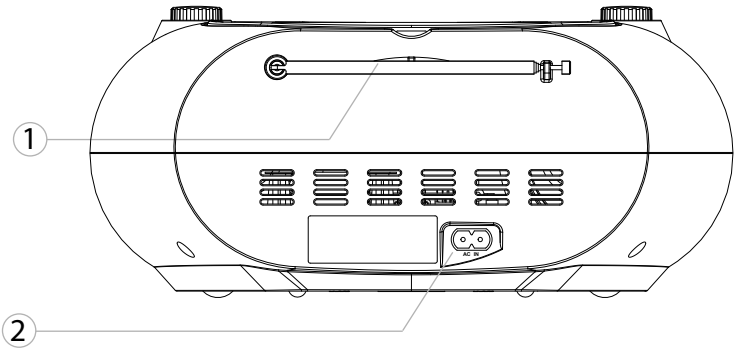

#	ITEM	DESCRIPTION
1	FM antenna	Provides an improved FM signal.
2	**AC IN** jack	Connect the AC cord (included) to this jack to operate your boombox on AC power.

Setting up your boombox

Connecting the AC cord

1. Make sure that your local AC power source matches the voltage shown on the plate located on the bottom of the boombox.
2. Insert the small connector at the end of the AC cord into the **AC IN** jack on the back of your boombox.
3. Plug the AC cord into a wall power outlet.

NOTES:
Unplug the AC cord when not in use.
The batteries are automatically bypassed when the AC cord is used.
- Power Electrical Specs: 100-240V ~ 50/60 Hz

Installing the batteries

1. Turn your boombox over, then open and remove the door to the battery compartment.
2. Insert four (4) UM-2 ("C") size alkaline batteries into the battery compartment. Make sure that you match the + and – symbols on the batteries with the + and – symbols in the battery compartment.
3. Reinstall and close the battery compartment door and return your boombox to the upright position.

NOTES:
- Alkaline batteries are recommended, for they support longer playtime than carbon zinc batteries.
- The AC cord must be disconnected from both the AC IN jack on the back of your boombox and the AC power outlet in order for your boombox to operate on battery power.

CAUTIONS:
Follow these precautions when using batteries in this device:
- Use only the size and type of batteries specified.
- Make sure that you follow the correct polarity as indicated in the battery compartment when installing batteries. Reversed batteries may cause damage to your boombox.
- Do not mix different types of batteries together or semi-used batteries with fresh ones.
- If your boombox is not to be used for a long period of time, remove the batteries to prevent damage or injury from possible battery leakage.
- Do not try to recharge batteries not intended to be recharged, because they can overheat and rupture. (Follow battery manufacturer's directions.)
- Do not throw batteries into a fire. Dispose of used batteries as hazardous waste.

Disc (Audio CD and MP3/WMA CD) Notes

Precautions for Playback

Compact discs (CDs) with the following logo on the label surface can be used. Do not use discs designed for purposes other than audio, such as CD-ROMs for PC use. Abnormal noise could damage the unit and/or speakers.







- The CD player supports CD-R and CD-RW discs.
  Note that some discs may not playback because of the disc characteristics, scratches, contamination or the recording state. A disc recorded with an audio CD recorder will not playback unless it is finalized.

Never use discs that have a special shape (such as hearts or octagons). These types of discs could damage the unit.



CD Playback with Copy-control Function

Some audio CDs with copy-control function do not comply with official CD standards. These are special discs and cannot be played with the unit.

Playback of MP3/WMA Discs

MP3/WMA files recorded on a CD-R/CD-RW can be played with the unit.

- Use discs which have been recorded following the ISO 9660 Level 2 file system. (The supported directory depth is eight levels, the same as ISO 9660 Level 1)
- Discs must be closed (finalized).
- Only MP3/WMA files with the extension ".mp3" or ". wma"are supported.
- MP3 files recorded using MPEG 1 audio layer 3 at sampling frequencies of 32/44.1/48 kHz and a bit rate of 32 -320 kbps are supported.
- WMA files recorded using MPEG 1 audio layer 3 at sampling frequencies of 11.025/22.05/44.1 kHz and a bit rate of 32 -192 kbps are supported.

NOTES:

- A disc recorded with a recorder or personal computer may not play in some cases. (Cause: Disc's characteristics, damaged or dirty disc, dirt on player's lens, dew condensation, etc.)
- A disc recorded on a personal computer might not play depending on the application settings or environment. Record the disc in a format supported by the unit.
- A disc with insufficient storage capacity may not playback properly.
- Files are played back in the same order as they are recorded on the disc.

Using your boombox

Basic operatons

Turning on/off the unit

Press ⏻ button to turn on the unit. Press the button again to return it to Standby mode.

> **NOTES:** Please wait while the unit will take 2-3 seconds to turn on. The display will light up when it is fully turned on.

Selecting the sound source

Press **MODE/EQ** button repeatedly to cycle through the sound sources (**CD>USB>AUX>BT>RADIO)**.
Stop cycling when the unit displays your desired input source.

> **TIPS:** Next time you switch on the boombox, it returns to the last selected source, unless its power supply has been cut off. In the case that the power supply has been cut off, it returns to RADIO source.

Adjusting the volume

Turn the **VOLUME** knob clockwise to raise the volume or counterclockwise to lower the volume.

> **TIPS:** The unit will save volume adjustment, unless the power supply has been cut off. In the case that the power supply has been cut off, it will reset the volume to original factory settings.

Using headphones

You can connect a pair of stereo headphones (ø3.5 mm, 1/8-inch phone plug) to the unit PHONES jack for private listening.

> **NOTES:**
> - Always turn down the volume before connecting your headphones.
> - While the headphones plug is inserted in the PHONES jack, the speakers are turned off.
> - The PHONES jack can be used as stereo audio output, by connecting it to the stereo audio input of your external audio system.

Selecting sound effect (EQ) presets

Press and hold **MODE/EQ** button repeatedly to select your desired sound effect (EQ) preset. Selections include **Classic, Rock, Pop, Jazz, and Flat.**

Using repeat mode

1 Press **REPEAT** while in playback to cycle through the repeat modes (**Repeat current track, Repeat all, Random**).
The following appears on the display:
- **ONE** —Repeat current track
- **ALL** —Repeat all tracks
- **RAM**—Random playback

2 To cancel repeat mode, press **REPEAT** until the **OFF** icon appears on the display.

NOTE: Repeat function is applicable to **CD/USB** modes only.

Playing the radio

1 Press ⏻ (Standby/ON) to turn on the boombox.
2 Press **MODE** button repeatedly to select **RADIO** mode .
3 Turn TUNING dial clockwise or counter clockwise to tune the radio to a higher or lower frequency.
4 Press and hold ⏭ (next) or ⏮ (previous) for two seconds to automatically tune to the next or previous station.
5 Adjust the volume to a comfortable level by turning VOLUME dial clockwise or counter clockwise
6 Press ⏻ (Standby/ON) to turn off the boombox.

Improving reception

- Fully extend the FM antenna. You may have to reposition the antenna for best reception.

NOTES: Radio reception is affected by distance, physical obstacles and other broadcast signals.

Using auto presets

1 Press ⏻ (Standby/ON) to turn on the boombox.
2 Press **MODE** button repeatedly to select **RADIO** mode.
3 To automatically scan for stations from low to high, press ⏯/SCAN. The searched stations are automatically saved as presets.
4 To select a preset station, press ⏭ (next) or ⏮ (previous) repeatedly until you reach the station you want.

NOTES:
- Up to 30 stations can be preset and presets are stored in frequency order.
- Depending on your location, a preset may be stored with no station, and you'll hear only noise when you select it.

Using manual presets

1 Press **MODE** button repeatedly to select **RADIO** mode.
2 Press and hold ⏭ (next) button repeatedly to search your desired station from low to high, or ⏮ (previous) button from high to low, the frequency of the searched station will display.
3 Press REPEAT/■ button, the unit will display the number of a default preset for the searched station.
4 Or you can short press ⏭ (next) or ⏮ (previous) button to select your desired preset for it.
5 Press REPEAT/■ button again to save the searched station to the selected preset, the unit will display its frequency and play it automatically.

Playing CDs

You can play standard and 3" audio CDs, CD-Rs, and CD-RWs.

CAUTION: Do not try to play DVDs, VCDs, or data CDs. You may damage your unit.

1. Press ⏻ (Standby/ON) to turn on the boombox.
2. Press **MODE** button repeatedly to select **CD** mode.
3. Hold the ⏏ area of the CD lid to open it.
4. Insert a CD, label side up.
5. Push down the CD lid to close it. Playback begins automatically and stops when finished.
6. Press and hold ■ (stop) to stop the CD before it is finished. The total number of tracks appears on the display.

NOTES:
- If a CD is inserted incorrectly, is dirty, or is damaged, or is not present at all, NO appears on the display.
- To prevent damage to the CD, never open the CD door while the CD is rotating and never touch the lens.
- Do not use the carrying handle when playing a CD. The CD player should only be used on a steady surface.

Pausing CD playback

1. Press ▶❙❙ (play/pause). Playback stops but the CD continues to spin and the elapsed time of the current track blinks on the display.
2. Press ▶❙❙ (play/pause) again to resume normal CD playback.

Skipping or searching a CD track

1. During playback, press ▶▶❙ (next) or ❙◀◀ (previous) to skip to the next or previous track, respectively.
2. Press and hold ▶▶❙ (next) or ❙◀◀ (previous) to quickly search the current track forward or backward, respectively.

Playing USB flash drives

MP3/WMA files recorded on a USB flash drive can be played with the unit.

1. Press ⏻ (Standby/ON) to turn on the boombox.
2. Press **MODE** button repeatedly to select **USB** mode till "~~USB~~" appears on the display.
3. Connect the USB flash drive to the USB port. Make sure that you insert your USB drive all the way into the USB port.
4. Press ▶❙❙/SCAN to begin/pause playback.
5. Press and hold REPEAT/■ to stop playback, and the number of the total tracks will appear on the display.

NOTES:
- Not all USB flash drives are supported.
- Supports USB flash drives of a maximum capacity of up to 128GB.
- FAT16/FAT32 file systems are supported (NTFS not supported).
- Supports MP3/WMA music files only.
- USB hubs are not supported.
- Do not connect the unit's USB port to a USB port on your computer.
- The USB flash drives will only fit in one direction.
- Music files are played back in the same order as they are saved in the USB flash drive. However, playback may change if the files or folders in the USB flashdrive are deleted or renamed on a computer, etc.

Listening to an external audio device

1. Make sure that the boombox is turned off.
2. Plug one end of the 3.5 mm AUX cable (included) into the **AUX IN** jack in the front of your boombox.
3. Plug the other end of the cable into the **Line-out** jack on the audio device, such as an iPod, smartphone, or other MP3 player.
4. Press ⏻ (Standby/ON) to turn on the boombox.
5. Press **MODE** button one or more times until " **AUX"**appears on the display.
6. Use the controls on the audio device to control playback.
7. Use the volume controls on both the unit and the external audio device, to adjust the ultimate volume to a comfortable level.

NOTES:
- If the volume level of your external audio device is substantially low, the volume adjustment on the unit may not be sufficient. In such a case, raise the volume level on the external audio device.
- If the input level is raised excessively, the sound may distort. If this occurs, adjust the input level appropriately.

Listening to a Bluetooth sound source

Before you can use your boombox with a Bluetooth device, you need to pair your device to the boombox. After your boombox is plugged in and turned on, do the following:

NOTES:
- Your boombox must be turned on to make a Bluetooth connection.
- Place the Bluetooth device within 33 ft. (10 m) of your boombox.
- Bluetooth is used as a convenient connection to your sound source.

Pairing your devices

1. Select **Bluetooth** as the input source by pressing the **MODE** button one or more times until "**bt**" appears on the display.
2. Navigate to your device's Bluetooth settings, turn on Bluetooth, then search for available devices. For additional information on pairing your device, see your device's documentation.

3 On your Bluetooth device, select "Megatek CB-M25BT" from the device list.
Repeat steps 1-2 if "Megatek CB-M25BT" is not displayed.

4 If a PIN code is requested, enter "0000".

5 When the Bluetooth connection has been established, a tone will sound.

NOTES:

- Your boombox can only be connected and play content from one device at a time.
- When you turn on your boombox, it automatically connects to the last connected device if that device is in range. To connect to a different paired device, turn off Bluetooth or unpair from the currently paired device and manually connect to the other paired device.

Important: Make sure that the device you connect and select as your sound source is outputting sound to the boombox. See your device's user manual for more information.

Disconnecting your devices

- Turn off the Bluetooth function on your device.

Reconnecting to a paired device

When you select "bt" mode, your boombox automatically connects to a previously paired device. If it fails to connect, please check the following:

Your boombox loses the Bluetooth connection if you…	**To reconnect...**
Turn it off.	Turn on your boombox. Your boombox searches for the last connected Bluetooth device and reconnects.
Move the Bluetooth device out of range.	Move your Bluetooth device within 33 ft. (10 m) of your boombox.
Turn off your Bluetooth device.	Turn on your Bluetooth device, then make sure that Bluetooth is on.
Turn off Bluetooth on your Bluetooth device.	Turn on Bluetooth on your Bluetooth device.
Connect your Bluetooth device to another Bluetooth device.	Disconnect your Bluetooth device from the other Bluetooth device, then set your device to pairing mode. Select "Megatek CB-M25BT" on your Bluetooth device.
Change your boombox's input source	Change the boombox's input source back to Bluetooth.

NOTE: If a device does not automatically reconnect, you may need to reselect "Megatek CB-M25BT" on your Bluetooth device.

Connecting to a different device

1. On your Bluetooth device, turn off the Bluetooth function or unpair the boombox in your Bluetooth device list. The boombox can now be connected to another Bluetooth device.
2. Follow the section Pairing your devices on page 11 to connect a new device.

Receiving a phone call while playing music

- When you receive a call while playing music through your phone, the music stops automatically.
- When you hang up, depending on the setting of your phone, the current track may resume playback.

Pair a Secondary CB-M25BT via TWS

You can pair with a secondary CB-M25BT (to be purchased separately) via its built-in Wireless Stereo Pairing (TWS) technology, to enjoy true wireless stereo sound effects with left and right sound channels separated. The two CB-M25BTs will work as one wireless stereo speaker system with one Bluetooth pairing ID only.

1. Press ⏻ (Standby/ON) to turn on the first CB-M25BT, and select Bluetooth mode.
2. Repeat step 1 for the secondary CB-M25BT, and ensure it is not connected to any Bluetooth device.
3. Double press the "⏯/SCAN" button of the first boombox to pair the other via TWS. The pressed CB-M25BT will beep, and start searching for the other to pair via TWS, a prompt tone will sound once they are paired with each other. Once paired, the two CB-M25BTs will work as one wireless stereo speaker system, with the double-pressed one as left sound channel, and the other as right sound channel.
4. Follow the instructions on page 11 and 12 to use the TWS paired players as one Bluetooth speaker system to enjoy wireless streaming music.
5. Double press "⏯/SCAN" button on either boombox, you can disconnect their TWS pairing, and use them separately.

NOTES: In Wireless Stereo Pairing (TWS) mode, operating either of the two units will operate the other the same. For example, turning off either of the two units will turn off the other.

Troubleshooting

CAUTION: Do not try to repair the boombox yourself. Doing so will invalidate your warranty.

Problem	Solution
Your boombox will not turn on.	• Unplug your boombox for a few moments, then plug it back in. • Make sure that the AC outlet is working by plugging another device into it.
The CD player will not play.	• Make sure that you have put a CD in the CD compartment • Make sure that the CD is inserted label side up. • Try a different CD. • Make sure that the CD player is not paused. • Make sure that the CD mode is selected. • Make sure that you are using a compatible CD. Your boombox can play standard and 3" audio CDs, CD-Rs, and CD-RWs.
A CD skips while playing.	• Wipe the CD with a cloth to clean it. See Cleaning discs on page 16. • Try a different CD. • Make sure that the CD is not warped, scratched, or damaged. • Make sure that your boombox is not being affected by vibration or shock. Move the boombox if necessary. • Make sure that you are using a compatible CD. Your boombox can play standard and 3" audio CDs, CD-Rs, and CD-RWs.
I hear noise or distorted sound on FM radio broadcasts.	• Extend the FM antenna. • Rotate your boombox until the best reception is obtained. • Try turning off electrical appliances near your boombox, such as hair dryers, vacuum cleaners, or fluorescent lights.
I don't hear any sound.	• Increase the volume. • Plug in the AC power cord and press ⏻ (Standby/ON) to turn on your boombox. • Make sure that you have installed fresh batteries and that they are installed correctly. • Make sure that you have selected the correct source. • If you are in AUX mode, make sure the volume has not been muted on your playback device.
The sound seems very low.	• If you are using AUX mode, make sure that the volume is turned up on both your audio source and your boombox.
A USB drive will not play.	• Disconnect the USB drive and insert it back to the USB port all the way in. • Make sure your USB drive is not formatted in NTFS.

Problem	Solution
My boombox won't connect to my Bluetooth device.	• Shorten the distance between your boombox and your Bluetooth device. • Turn your devices off, then on. Re-pair your boombox and your Bluetooth device. • Make sure that your boombox is not paired to another Bluetooth device. • Make sure that your boombox and Bluetooth device are both in pairing mode. • Make sure that your Bluetooth device is not paired to any other device. • Make sure that you have selected "Bluetooth device." on your Bluetooth device.
My Bluetooth device keeps unpairing.	• Shorten the distance between your boombox and your Bluetooth device. • If the battery on your Bluetooth device is low, recharge the battery.
"Megatek CB-M25BT" does not appear on my Bluetooth device.	• Shorten the distance between your boombox and your Bluetooth device. • Put your boombox into pairing mode, then refresh your list of Bluetooth devices. For more information, see the documentation that came with your Bluetooth device. • Make sure that your Bluetooth device is visible to other devices. For more information, see the documentation that came with your Bluetooth device.

Maintaining your boombox

Care and handling of discs

Handling discs

Do not touch the playback side of the disc. Hold the disc by the edges so that fingerprints do not get on the surface. Never stick paper or tape on the disc.



Storing discs

After playing, store the disc in its case. Do not expose the disc to direct sunlight or sources of heat and never leave it in a parked car exposed to direct sunlight.

Cleaning discs

Fingerprints and dust on the disc can cause poor sound quality and distortion. Before playing, clean the disc with a clean cloth. Wipe the disc from the center out.



Do not use strong solvents such as alcohol, benzine, thinner, commercially available cleaners, or anti-static spray intended for older vinyl records.

Cleaning the CD lens

If your CD lens gets dirty it can cause poor sound quality. To clean the lens you will need to purchase a CD lens cleaner which can maintain the output sound quality of your system. For instructions on cleaning the CD lens, refer to the literature accompanying the lens cleaner.

Cleaning your boombox

To prevent fire or shock hazard, disconnect your boombox from the AC power source when cleaning.

The finish on your boombox may be cleaned with a dust cloth and cared for as other furniture. Use caution when cleaning and wiping the plastic parts.

Mild soap and a damp cloth may be used on the front panel.

Specifications

AC input	100-240V~ 50/60 Hz
Power requirement	10 VAC, 1.0 A
Radio frequency	FM: 87.5-108.0 MHz
Dimensions (HxWxD)	5.3 x 11.8 x 9.4 in. (13.5 x 30.0 x 24.0 cm)
Power cord length	3.9 ft. (1.2 m)

Legal notices

FCC Statement

This device complies with Part 15 of the FCC Rules. Operation is subject to the following two conditions: (1) this device may not cause harmful interference, and (2) this device must accept any interference received, including interference that may cause undesired operation.

FCC Caution

Changes or modifications not expressly approved by the party responsible for compliance could void the user's authority to operate this equipment. This equipment has been tested and found to comply with the limits for a Class B digital device, pursuant to Part 15 of the FCC Rules. These limits are designed to provide reasonable protection against harmful interference in a residential installation. This equipment generates, uses, and can radiate radio frequency energy and, if not installed and used in accordance with the instructions, maybe cause harmful interference to radio communications.

However, there is no guarantee that interference will not occur in a particular installation. If this equipment does cause harmful interference to radio or television reception, which can be determined by turning the equipment off and on, the user is encouraged to try to correct the interference by one or more of the following measures:

- Reorient or relocate the receiving antenna.
- Increase the separation between the equipment and receiver.
- Connect the equipment into an outlet on a circuit different from that to which the receiver is connected.
- Consult the dealer or an experienced radio/TV technician for help.

12 months warranty

Thank you for choosing Megatek.

Megatek Electronics warrants your new product to be free from defects in materials and workmanship for a period of twelve (12) months, from the date of receiving. This warranty is in addition to your rights under Amazon's return and refund policies which apply to your purchase.

Megatek will provide you with your choice of a full refund or exchange (where possible) for this product if it becomes defective within the warranty period. Megatek will bear the reasonable expense of claiming the warranty. This warranty will no longer apply where the defect is a result of alteration, accident, misuse, abuse, or neglect.

Please contact our Customer Service with your order ID and description of the problem, for warranty claim or any difficulties with your product:

Email: service@megatekelec.com

Amazon Buyer-Seller Messages: Go to Your Orders then find your order in the list, click **Megatek Electronics** link below the product title, click the Ask a Question button.

Phone: +86 579-8275-5605

Always there to support you

Get support at:
www.megatekelec.com

Question?
Contact Megatek:
service@megatekelec.com