Commercial Split Heat Pumps

10 Ton **7.5 Ton**

RPCY Series

Cooling Efficiencies up to: 11.0 EER / 14.1 IEER / 3.4 COP
Nominal Sizes: 7.5 & 10 Tons [26.4 & 35.2 kW]
Cooling Capacities: 90.0k Btu/h to 120.0k Btu/h [26.4 & 35.2 kW]
Refrigerant Type: R-454B
Designed for use with matching RHCYP models

ISO 9001:2015

c UL us LISTED

AHRI CERTIFIED™ www.ahridirectory.org
Unitary Large HP
AHRI Standard 340/360
Certification applies only when the complete system is listed with AHRI.

TABLE OF CONTENTS

Unit Features and Benefits.....3-4
Model Number Identification 5
Selection Procedure 6
General Data 7-9
Electrical Data 10
A2L Refrigerant Installation Safety Data 11
Gross Performance Data 12-15
Dimensional Data 16-17
Piping Recommendation 18-19
Guide Specifications 20-21
Limited Warranty 22

RPCY STANDARD FEATURES INCLUDE:

- Factory charged with nitrogen for shipping
- Ready to be charged with R-454B refrigerant in the field after installation
- Wired and run tested
- Scroll compressors with internal line break overload and high pressure protection
- High and Low Pressure switches provide additional system protection
- Forkable base rails on 10 Ton for easy handling and lifting
- Cooling operation up to 125°F ambient
- Tube and Fin condenser and evaporator coils
- Single-piece control door
- 7.5 and 10 Ton includes a single Two-Stage scroll compressor

ACCESSORIES

ACCESSORY DESCRIPTION	MODEL NUMBER	SIZE USED ON
Low Ambient Control	RXAD-A08	ALL

WHY USE AN AIR COOLED REMOTE HEAT PUMP SYSTEM?

- The size ranges offered by Sure Comfort® allow you to mix or match components to meet actual job requirements, thus eliminating the need to use oversized or undersized equipment. Equipment sized to meet the actual load will provide better operating economy, better humidity control, and longer equipment life.
- With an air cooled system, you have no water or sewer connections to make, and no troublesome and costly water treatment problems.
- Since the Remote Condensing Heat Pump unit is located outside the building, and the low profile air handling unit can be installed in the drop ceiling or in the conditioned space, you will not need a separate equipment room which takes up valuable building space.
- Remote mounting of the already quiet heat pump unit keeps the compressor and condenser fan noise outside, and the vertical discharge fans carry the sound up and away from the surrounding area.
- Because of the simple design of the Remote Condensing Heat Pump unit, installation is quick and simple, and very little maintenance is required.
- RPCY Commercial Split heat pump models are designed for use with matching RHCYP air handlers, which feature a patent-pending separable design that makes transport through and installation in tight spaces easier.

GENERAL INSTALLATION

The Remote Condensing Heat Pump unit must be installed outdoors. It should be located as near as possible to the indoor section to keep connecting refrigerant tubing lengths to a minimum. The unit must be installed to allow a free air flow to the outdoor coils.

If several units are installed adjacent to each other, care must be taken to avoid recirculation of air from one remote heat pump to another. In all installations, adequate space must be provided for installation and servicing.

The outdoor unit must not be connected to any duct work. Do not locate unit under a roof drip; if necessary, install gutters, etc., to prevent water run-off from hitting the unit. To prevent air recirculation, it is recommended that the unit not be installed under an overhang, but if necessary **allow a minimum of 60 inches [1524 mm] above the unit for air discharge.**

SLAB INSTALLATION

Remote Condensing Heat Pump units should be set on a solid level foundation. When installed at ground level, the unit should be placed on a 6 inch [152.4 mm] cement slab. If the pad is formed at the installation site, do not pour the pad tight against the structure, otherwise vibration will be transmitted from the unit through the pad.

ROOFTOP INSTALLATION

If rooftop installation is required, make certain that the building construction is adequate for the weight of the unit. (Refer to the General Data tables.) Before placing the unit on the roof, make certain that the nylon rigging slings are of sufficient length to maintain equilibrium of the unit when lifting. Under no circumstances should the unit be lifted by only one corner for rooftop installation.

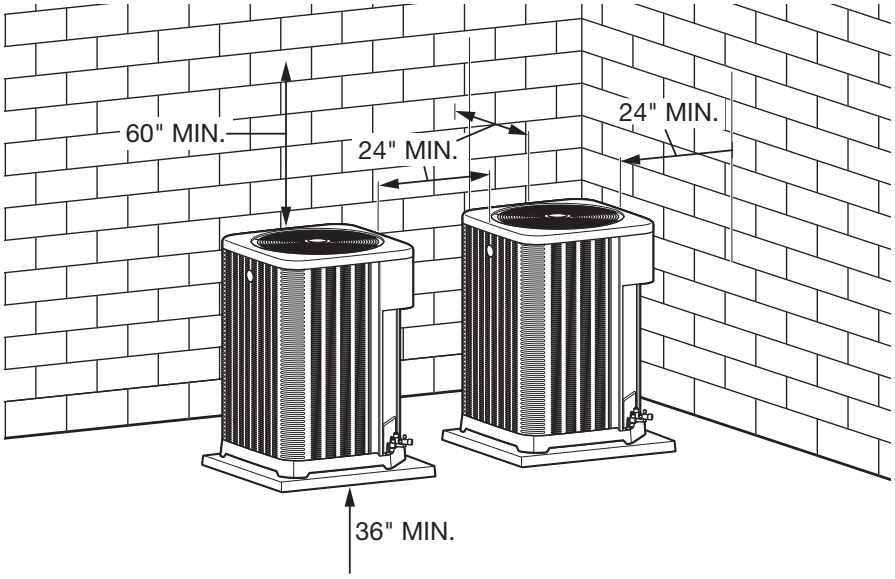

[ ] Designates Metric Conversions

R	P	C	Y	2	090	C	A	Z
1	2	3	4	5	678	9	10	11

1—Brand
R = Sure Comfort

2—Unit Type
P = Heat Pump

3—Cabinet Type
C = Commercial

4—Refrigerant
Y = R-454B

5—Cooling Configuration
2 = 2-Stage Cooling

6,7,8—Capacity
090 = 7.5 Ton
120 = 10 Ton

9—Voltage
C = 208/230 V, 3 PH, 60 Hz
D = 460 V, 3 PH, 60 Hz
Y = 575 V, 3 PH, 60 Hz

10—Minor Series
A = 1st Design

11—Compressor
Z = Scroll Compressor

COMMERCIAL SPLIT HEAT PUMP MODEL MATCH-UPS

OUTDOOR UNIT MODEL NUMBER	INDOOR AIR HANDLER MODEL NUMBER
RPCY2090	RHCYP2090
RPCY2120	RHCYP2120

SELECTION PROCEDURE

To select an RPCY Remote Condensing unit to meet a job requirement, follow this procedure.

1. DETERMINE COOLING AND HEATING REQUIREMENTS AND SPECIFIC OPERATING CONDITIONS FROM PLANS AND SPECS.

Example:	Total cooling capacity—	84,000 Btu/h [24.61 kW]
	Sensible cooling capacity—	68,000 Btu/h [19.92 kW]
	Heating capacity—	120,000 Btu/h [35.16 kW]
	*Condenser Entering Air—	95°F [35°C] DB
	*Evaporator Mixed Air Entering	78°F [26°C] DB; 65°F [18°C] WB
	*Indoor Air Flow (vertical)	3000 CFM [1416 L/s]
	*External Static Pressure	.5 in. WG
	Available Power	240 V, 3 PH

2. SELECT UNIT TO MEET COOLING REQUIREMENTS.

Since total cooling is within the range of a nominal 7.5 ton [26.4 kW] unit, enter cooling performance table at 95°F [35°C] DB condenser inlet air. Interpolate between 63°F [2°C] and 67°F [19°C] to determine total and sensible capacity and power input for 65°F [18°C] WB evaporator inlet air at 3200 CFM [1510 L/s] indoor air flow (table basis):

Total Capacity = 85,150 Btu/h [25.0 kW]
Sensible Capacity = 73,850 Btu/h [23.0 kW]
Power Input (Compressor and Cond. Fans) = 6,750 Watts

Use formula in note ① on the cooling performance table to determine sensible capacity at 78°F [26°C] DB evaporator entering air:

Sensible Capacity = 67,250 Btu/h [19.7 kW]

3. CORRECT CAPACITIES OF STEP 2 FOR ACTUAL AIR FLOW.

Select factors from airflow correction table at 3000 CFM [1416 L/s] and apply to data obtained in step 2 to obtain gross capacity:

Total Capacity = 85,150 x .99 = 84,299 Btu/h [24.7 kW]
Sensible Capacity = 73,850 x .97 = 71,634 Btu/h [21.0 kW]
Power Input = 6,750 x 1.00 = 6,750 Watts

These are Gross Capacities, not corrected for blower motor heat or power.

4. DETERMINE BLOWER SPEED AND WATTS TO MEET SYSTEM DESIGN.

In the “Commercial Air Handler Specification Sheet” follow the bold line example on the “Blower Performance Curve – 10 ton (wet coil)”. Enter the graph at 3000 CFM [1416 L/s]. Determine which “number of turns” line is closest to the intersection of 0.5 IN [.12 kPa] static and 3000 CFM [1416 L/s]. In this case 4 turns is the closest. Continue following the 3000 CFM line to the next intersection of 4 turns. From this intersection draw a line to the right to determine the watts.

WATTS = 950

5. CALCULATE INDOOR BLOWER Btu/h HEAT EFFECT FROM MOTOR WATTS, STEP 4.

HEAT = 950 x 3.412 = 3,240 Btu/h

6. CALCULATE NET COOLING CAPACITIES, EQUAL TO GROSS CAPACITY, STEP 3, MINUS INDOOR BLOWER MOTOR HEAT.

Net Total Capacity = 84,299 – 3,240 = 81,059 Btu/h [23.76 kW]
Net Sensible Capacity = 71,634 – 3,240 = 68,394 Btu/h [20.00 kW]

7. CALCULATE UNIT INPUT AND JOB EER.

Total Power Input = 6,750 (step 3) + 950 (step 4) = 7,700 Watts

$$\text{EER} = \frac{\text{Net Total Btu/h [kW] (step 6)}}{\text{Power Input, Watts (above)}} = \frac{81{,}059}{7700} = 10.5$$

8. SELECT UNIT HEATING CAPACITY.

In the “Commercial Air Handler Specification Sheet” turn to the “electrical heater kit characteristics table,” find a heater kit that is compatible and has minimum of 120,000 Btu/h. The RXHE-DE020CA [20 kW] has a capacity of 114,000 Btu/h at 208/230 V.

***NOTE:** These operating conditions are typical of a commercial application in a 95°F/79°F [35°C/26°C] design area with indoor design of 76°F [24°C] DB and 50% RH and 10% ventilation air, with the unit mounted and centered on the zone it conditions by ducts.

[ ] Designates Metric Conversions

GENERAL DATA—RPCY2 MODELS—7.5 TONS

Model RPCY2 Series	090CAZ	090DAZ	090YAZ
Cooling Performance[A]			CONTINUED →
Gross Cooling Capacity Btu/h [kW]	90,000 [26.4]	90,000 [26.4]	90,000 [26.4]
Gross Heating Capacity Btu/h [kW]	90,000 [26.4]	90,000 [26.4]	90,000 [26.4]
EER	11.0	11.0	11.0
IEER[B]	14.1	14.1	14.1
Nominal CFM/AHRI Rated CFM [L/s]	3,000/2,875 [1,416/1,357]	3,000/2,875 [1,416/1,357]	3,000/2,875 [1,416/1,357]
AHRI Net Cooling Capacity Btu/h [kW]	85,500 [25.1]	85,500 [25.1]	85,500 [25.1]
Net Sensible Capacity Btu/h [kW]	62,215 [18.2]	62,215 [18.2]	62,215 [18.2]
Net Latent Capacity Btu/h [kW]	23,285 [6.8]	23,285 [6.8]	23,285 [6.8]
AHRI Net Heating Capacity Btu/h [kW]	85,500 [25.1]	85,500 [25.1]	85,500 [25.1]
Heating Performance (Heat Pumps)			
High Temp. Btu/h [kW] Rating @47°F	86,000 [25.2]	86,000 [25.2]	86,000 [25.2]
System Power kW/COP @47°F	7.41 /3.4	7.41 /3.4	7.41 /3.4
Low Temp. Btu/h [kW] Rating @17°F	55,000 [16.1]	55,000 [16.1]	55,000 [16.1]
System Power kW/COP @17°F	2.25	2.25	2.25
Compressor			
No./Stage/Type	1/2/Scroll	1/2/Scroll	1/2/Scroll
Outdoor Sound Rating (dB)[C]	86	86	86
Outdoor Coil - Fin Type	Louvered	Louvered	Louvered
Tube Type	Rifled	Rifled	Rifled
Tube Size in. [mm] OD	0.375 [9.5]	0.375 [9.5]	0.375 [9.5]
Face Area sq. ft. [sq. m]	32.8 [3.0]	32.8 [3.0]	32.8 [3.0]
Rows/FPI [FPcm]	2 / 22 [9]	2 / 22 [9]	2 / 22 [9]
Outdoor Fan - Type	Propeller	Propeller	Propeller
No. Blades/Diameter in. [mm]	4/24 [609.6]	4/24 [609.6]	4/24 [609.6]
Drive Type/No. Speeds	ECM/1	ECM/1	PSC/1
CFM [L/s]	5,700 [2,690]	5,700 [2,690]	5,700 [2,690]
No. Motors/HP	1 at 1/2HP	1 at 3/4HP	1 at 1/2HP
Motor RPM	1,150	1,150	1,150
Refrigerant Charge Oz. [g]	328.5 [9,313]	328.5 [9,313]	328.5 [9,313]
Weights			
Net Weight lbs. [kg]	428 [194.1]	428 [194.1]	428 [194.1]
Ship Weight lbs. [kg]	448 [203.2]	448 [203.2]	448 [203.2]

NOTES:

A. Cooling Performance is rated at 95°F ambient, 80°F entering dry bulb, 67°F entering wet bulb. Gross capacity does not include the effect of fan motor heat. AHRI capacity is net and includes the effect of fan motor heat. Units are suitable for operation to 20% of nominal cfm. Units are certified in accordance with the Unitary Air Conditioner Equipment certification program, which is based on AHRI Standard 340/360.

B. EER and Integrated Efficiency Ratio (IEER) is rated at AHRI conditions in accordance with AHRI Standard 340/360.

C. Outdoor Sound Rating shown is tested in accordance with AHRI Standard 270.

[ ] Designates Metric Conversions

GENERAL DATA—RPCY2 MODELS—10 TONS

Model RPCY2 Series	120CAZ	120DAZ	120YAZ
Cooling Performance[A]			
Gross Cooling Capacity Btu/h [kW]	120,000 [35.2]	120,000 [35.2]	120,000 [35.2]
Gross Heating Capacity Btu/h [kW]	120,000 [35.2]	120,000 [35.2]	120,000 [35.2]
EER	11.0	11.0	11.0
IEER[B]	14.1	14.1	14.1
Nominal CFM/AHRI Rated CFM [L/s]	4,000/4,050 [1,888/1,911]	4,000/4,050 [1,888/1,911]	4,000/4,050 [1,888/1,911]
AHRI Net Cooling Capacity Btu/h [kW]	114,000 [33.4]	114,000 [33.4]	114,000 [33.4]
Net Sensible Capacity Btu/h [kW]	84,000 [24.6]	84,000 [24.6]	84,000 [24.6]
Net Latent Capacity Btu/h [kW]	30,000 [8.8]	30,000 [8.8]	30,000 [8.8]
AHRI Net Heating Capacity Btu/h [kW]	114,000 [33.4]	114,000 [33.4]	114,000 [33.4]
Heating Performance (Heat Pumps)			
High Temp. Btu/h [kW] Rating @47°F	108,000 [31.7]	108,000 [31.7]	108,000 [31.7]
System Power kW/COP @47°F	9.47 / 3.4	9.47 / 3.4	9.47 / 3.4
Low Temp. Btu/h [kW] Rating @17°F	57,000 [16.7]	57,000 [16.7]	57,000 [16.7]
System Power kW/COP @17°F	7.82 / 2.25	7.82 / 2.25	7.82 / 2.25
Compressor			
No./Stage/Type	1/2/Scroll	1/2/Scroll	1/2/Scroll
Outdoor Sound Rating (dB)[C]	88	88	88
Outdoor Coil - Fin Type	Louvered	Louvered	Louvered
Tube Type	Rifled	Rifled	Rifled
Tube Size in. [mm] OD	0.375 [9.5]	0.375 [9.5]	0.375 [9.5]
Face Area sq. ft. [sq. m]	16.4 [1.5]	16.4 [1.5]	16.4 [1.5]
Rows/FPI [FPcm]	2 / 22 [9]	2 / 22 [9]	2 / 22 [9]
Outdoor Fan - Type	Propeller	Propeller	Propeller
No. Blades/Diameter in. [mm]	4/26 [660]	4/26 [660]	4/26 [660]
Drive Type/No. Speeds	ECM/1	ECM/1	PSC/1
CFM [L/s]	11,400 [5,380]	11,400 [5,380]	11,400 [5,380]
No. Motors/HP	2 at 1/2HP	2 at 3/4 HP	2 at 1/2HP
Motor RPM	900	900	900
Refrigerant Charge Oz. [g]	460 [13,041]	460 [13,041]	460 [13,041]
Weights			
Net Weight lbs. [kg]	642 [291]	642 [291]	642 [291]
Ship Weight lbs. [kg]	662 [300]	662 [300]	662 [300]

NOTES:

A. Cooling Performance is rated at 95°F ambient, 80°F entering dry bulb, 67°F entering wet bulb. Gross capacity does not include the effect of fan motor heat. AHRI capacity is net and includes the effect of fan motor heat. Units are suitable for operation to 20% of nominal cfm. Units are certified in accordance with the Unitary Air Conditioner Equipment certification program, which is based on AHRI Standard 340/360.

B. EER and Integrated Efficiency Ratio (IEER) is rated at AHRI conditions in accordance with AHRI Standard 340/360.

C. Outdoor Sound Rating shown is tested in accordance with AHRI Standard 270.

[ ] Designates Metric Conversions

UNIT DIMENSIONS

Model Number	SHIPPING						OPERATING					
	H (Height)		L (Length)		W (Width)		H (Height)		L (Length)		W (Width)	
	Inches	mm	Inches	mm	Inches	mm	Inches	mm	Inches	mm	Inches	mm
RPCY2090	50-4/5	1291	44-7/10	1135	33-1/10	841	48-4/5	1240	42-7/10	1084	31-1/10	791
RPCY2120	45	1143	75-1/2	1918	41	1041	44	1117	74- 17/63	1886	40	1016

ELECTRICAL DATA

ELECTRICAL DATA – RPCY2 SERIES				
		090CAZ	**090DAZ**	**090YAZ**
OD Unit Information	Unit Operating Voltage Range	187-253	414-506	541-610
	Volts	208/230	460	575
	Minimum Circuit Ampacity	39/39	17	13
	Minimum Overcurrent Protection Device Size	45	20	15
	Maximum Overcurrent Protection Device Size	60	25	20
Compressor Motor	No.	1	1	1
	Volts	208/230	460	575
	Phase	3	3	3
	Amps (RLA), Comp. 1	26.3	11	9.2
	Amps (LRA), Comp. 1	178.5	95.3	65
Condenser Motor	No.	1	1	1
	Volts	208/230	460	575
	Phase	1	1	1
	HP	1/2	3/4	1/2
	Amps (FLA, each)	5.2	3	1
	Amps (LRA, each)	—	—	2.2

ELECTRICAL DATA – RPCY2 SERIES				
		120CAZ	**120DAZ**	**120YAZ**
OD Unit Information	Unit Operating Voltage Range	187-253	414-506	541-610
	Volts	208/230	460	575
	Minimum Circuit Ampacity	44/44	24	17
	Minimum Overcurrent Protection Device Size	60	30	20
	Maximum Overcurrent Protection Device Size	70	35	25
Compressor Motor	No.	1	1	1
	Volts	208/230	460	575
	Phase	3	3	3
	Amps (RLA), Comp. 1	26.5	14	12
	Amps (LRA), Comp. 1	255	123	94
Condenser Motor	No.	1	1	1
	Volts	208/230	460	575
	Phase	1	1	1
	HP	1/2	3/4	1/2
	Amps (FLA, each)	5.2	3	1
	Amps (LRA, each)	—	—	2.2

A2L REFRIGERANT INSTALLATION SAFETY DATA

QMIN AT RATING PLATE CHARGE WEIGHT [0'–200' 1/2" LINE SET]						
RPCY2		090 [0']	090 [50']	090 [100']	090 [150']	090 [200']
Refrigerant Chart Weight (oz)		328.5	378.5	428.5	478.5	528.5
Minimum Total Room Area, TAmin (ft²)		605.5	697.7	789.8	882.0	974.2
Minimum Circulation Airflow, Qmin (CFM)		1093.0	1259.0	1425.0	1592.0	1758.0
INSTALLED ALTITUDE (FT ABOVE SEA LEVEL)	ALTITUDE ADJUSTMENT FACTOR	MINIMUM TOTAL CONDITIONED ROOM AREA, TAMIN (SQ FT)				
0	1.000	606	698	790	882	974
1000	1.025	621	715	809	904	998
2000	1.051	636	733	830	927	1024
3000	1.078	653	752	852	951	1050
4000	1.107	670	772	874	977	1079
5000	1.138	689	794	899	1003	1108
6000	1.170	708	816	924	1032	1140
6500	1.187	719	828	937	1047	1156

QMIN AT RATING PLATE CHARGE WEIGHT [0'–200' 5/8" LINE SET]						
RPCY2		120 [0']	120 [50']	120 [100']	120 [150']	120 [200']
Refrigerant Chart Weight (oz)		460.0	535.0	610.0	685.0	760.0
Minimum Total Room Area, TAmin (ft²)		847.9	940.1	1032.2	1124.4	1216.6
Minimum Circulation Airflow, Qmin (CFM)		1530.0	1696.0	1863.0	2029.0	2195.0
INSTALLED ALTITUDE (FT ABOVE SEA LEVEL)	ALTITUDE ADJUSTMENT FACTOR	MINIMUM TOTAL CONDITIONED ROOM AREA, TAMIN (SQ FT)				
0	1.000	848	940	1032	1124	1217
1000	1.025	869	963	1058	1152	1247
2000	1.051	891	988	1085	1182	1278
3000	1.078	914	1014	1113	1212	1312
4000	1.107	939	1041	1143	1245	1347
5000	1.138	965	1069	1174	1279	1384
6000	1.170	992	1100	1208	1315	1423
6500	1.187	1006	1116	1225	1334	1444

[ ] Designates Metric Conversions

COOLING PERFORMANCE DATA—RPCY2090 + RHCYP2090

			ENTERING INDOOR AIR @ 80°F [26.7°C] dbE								
	wbE		71°F [21.7°C]			67°F [19.4°C]			63°F [17.2°C]		
	CFM [L/s]		3200 [1510]	2875 [1357]	2300 [1085]	3200 [1510]	2875 [1357]	2300 [1085]	3200 [1510]	2875 [1357]	2300 [1085]
	DR ①		0.05	0.09	0.12	0.05	0.09	0.12	0.05	0.09	0.12
OUTDOOR DRY BULB TEMPERATURE °F [°C]	75 [23.9]	Total kBtu/h [kW]	97.2 [28.5]	95.2 [27.9]	91.8 [26.9]	88.2 [25.8]	86.5 [25.4]	83.3 [24.4]	79.3 [23.2]	77.7 [22.8]	74.8 [21.9]
		Sens kBtu/h [kW]	53.7 [15.7]	51.1 [15.0]	46.3 [13.6]	64.7 [19.0]	61.5 [18.0]	55.7 [16.3]	75.7 [22.2]	71.9 [21.1]	65.2 [19.1]
		Power	6.0	5.9	5.8	5.9	5.8	5.7	5.7	5.7	5.6
	80 [26.7]	Total kBtu/h [kW]	96.9 [28.4]	95.0 [27.8]	91.5 [26.8]	87.9 [25.8]	86.2 [25.3]	83.0 [24.3]	79.0 [23.2]	77.4 [22.7]	74.6 [21.9]
		Sens kBtu/h [kW]	54.2 [15.9]	51.5 [15.1]	46.7 [13.7]	65.2 [19.1]	61.9 [18.1]	56.1 [16.4]	76.1 [22.3]	72.3 [21.2]	65.6 [19.2]
		Power	6.5	6.4	6.3	6.4	6.3	6.2	6.3	6.2	6.1
	85 [29.4]	Total kBtu/h [kW]	96.6 [28.3]	94.7 [27.8]	91.2 [26.7]	87.7 [25.7]	85.9 [25.2]	82.8 [24.3]	78.7 [23.1]	77.1 [22.6]	74.3 [21.8]
		Sens kBtu/h [kW]	54.6 [16.0]	51.9 [15.2]	47.0 [13.8]	65.6 [19.2]	62.3 [18.3]	56.5 [16.6]	76.6 [22.5]	72.7 [21.3]	65.9 [19.3]
		Power	7.0	7.0	6.9	6.9	6.9	6.8	6.8	6.8	6.6
	90 [32.2]	Total kBtu/h [kW]	96.3 [28.2]	94.4 [27.7]	91.0 [26.7]	87.4 [25.6]	85.6 [25.1]	82.5 [24.2]	78.4 [23.0]	76.8 [22.5]	74.0 [21.7]
		Sens kBtu/h [kW]	55.0 [16.1]	52.3 [15.3]	47.4 [13.9]	66.0 [19.3]	62.7 [18.4]	56.9 [16.7]	77.0 [22.6]	73.1 [21.4]	66.3 [19.4]
		Power	7.6	7.5	7.4	7.5	7.4	7.3	7.4	7.3	7.2
	95 [35]	Total kBtu/h [kW]	96.1 [28.2]	94.1 [27.6]	90.7 [26.6]	87.1 [25.5]	85.3 [25.0]	82.2 [24.1]	78.1 [22.9]	76.6 [22.5]	73.8 [21.6]
		Sens kBtu/h [kW]	55.5 [16.3]	52.7 [15.4]	47.8 [14.0]	66.5 [19.5]	63.1 [18.5]	57.2 [16.8]	77.4 [22.7]	73.5 [21.5]	66.7 [19.5]
		Power	8.1	8.0	7.9	8.0	7.9	7.8	7.9	7.8	7.7
	100 [37.8]	Total kBtu/h [kW]	95.8 [28.1]	93.8 [27.5]	90.4 [26.5]	86.8 [25.4]	85.1 [24.9]	82.0 [24.0]	77.8 [22.8]	76.3 [22.4]	73.5 [21.5]
		Sens kBtu/h [kW]	55.9 [16.4]	53.1 [15.6]	48.2 [14.1]	66.9 [19.6]	63.5 [18.6]	57.6 [16.9]	77.8 [22.8]	74.0 [21.7]	67.1 [19.7]
		Power	8.7	8.6	8.4	8.6	8.5	8.3	8.4	8.4	8.2
	105 [40.6]	Total kBtu/h [kW]	95.5 [28.0]	93.6 [27.4]	90.2 [26.4]	86.5 [25.4]	84.8 [24.9]	81.7 [23.9]	77.6 [22.7]	76.0 [22.3]	73.2 [21.5]
		Sens kBtu/h [kW]	56.3 [16.5]	53.5 [15.7]	48.5 [14.2]	67.3 [19.7]	63.9 [18.7]	58.0 [17.0]	77.6 [22.7]	74.4 [21.8]	67.4 [19.8]
		Power	9.2	9.1	9.0	9.1	9.0	8.9	9.0	8.9	8.7
	110 [43.3]	Total kBtu/h [kW]	95.2 [27.9]	93.3 [27.3]	89.9 [26.3]	86.2 [25.3]	84.5 [24.8]	81.4 [23.9]	77.3 [22.7]	75.7 [22.2]	73.0 [21.4]
		Sens kBtu/h [kW]	56.8 [16.6]	53.9 [15.8]	48.9 [14.3]	67.8 [19.9]	64.4 [18.9]	58.3 [17.1]	77.3 [22.7]	74.8 [21.9]	67.8 [19.9]
		Power	9.7	9.6	9.5	9.6	9.6	9.4	9.5	9.4	9.3
	115 [46.1]	Total kBtu/h [kW]	94.9 [27.8]	93.0 [27.3]	89.6 [26.3]	86.0 [25.2]	84.2 [24.7]	81.2 [23.8]	77.0 [22.6]	75.4 [22.1]	72.7 [21.3]
		Sens kBtu/h [kW]	57.2 [16.8]	54.3 [15.9]	49.3 [14.4]	68.2 [20.0]	64.8 [19.0]	58.7 [17.2]	77.0 [22.6]	75.2 [22.0]	68.2 [20.0]
		Power	10.3	10.2	10.0	10.2	10.1	9.9	10.1	10.0	9.8
	120 [48.9]	Total kBtu/h [kW]	94.6 [27.7]	92.7 [27.2]	89.4 [26.2]	85.7 [25.1]	83.9 [24.6]	80.9 [23.7]	76.7 [22.5]	75.2 [22.0]	72.4 [21.2]
		Sens kBtu/h [kW]	57.6 [16.9]	54.8 [16.1]	49.6 [14.5]	68.6 [20.1]	65.2 [19.1]	59.1 [17.3]	76.7 [22.5]	75.2 [22.0]	68.5 [20.1]
		Power	10.8	10.7	10.5	10.7	10.6	10.4	10.6	10.5	10.3
	125 [51.7]	Total kBtu/h [kW]	94.4 [27.7]	92.5 [27.1]	89.1 [26.1]	85.4 [25.0]	83.7 [24.5]	80.6 [23.6]	76.4 [22.4]	74.9 [22.0]	72.2 [21.2]
		Sens kBtu/h [kW]	58.1 [17.0]	55.2 [16.2]	50.0 [14.7]	69.0 [20.2]	65.6 [19.2]	59.5 [17.4]	76.4 [22.4]	74.9 [22.0]	68.9 [20.2]
		Power	11.4	11.3	11.1	11.3	11.2	11.0	11.1	11.0	10.8

DR —Depression ratio
dbE —Entering air dry bulb
wbE—Entering air wet bulb

Total —Total capacity x 1000 Btu/h
Sens —Sensible capacity x 1000 Btu/h
Power —kW input

NOTES:
① When the entering air dry bulb is other than 80°F [27°C], adjust the sensible capacity from the table by adding [1.10 x CFM x (1 – DR) x (dbE – 80)].

[ ] Designates Metric Conversions

COOLING PERFORMANCE DATA—RPCY2120 + RHCYP2120

ENTERING INDOOR AIR @ 80°F [26.7°C] dbE											
wbE			71°F [21.7°C]			67°F [19.4°C]			63°F [17.2°C]		
CFM [L/s]			4425 [2088]	4000 [1888]	3200 [1510]	4425 [2088]	4000 [1888]	3200 [1510]	4425 [2088]	4000 [1888]	3200 [1510]
DR ①			0.05	0.09	0.12	0.05	0.09	0.12	0.05	0.09	0.12
OUTDOOR DRY BULB TEMPERATURE °F [°C]	75 [23.9]	Total kBtu/h [kW]	129.1 [37.8]	126.7 [37.1]	122.1 [35.8]	121.0 [35.5]	118.7 [34.8]	114.4 [33.5]	112.9 [33.1]	110.7 [32.4]	106.7 [31.3]
		Sens kBtu/h [kW]	77.5 [22.7]	73.8 [21.6]	66.9 [19.6]	91.3 [26.8]	87.0 [25.5]	78.9 [23.1]	105.1 [30.8]	100.1 [29.3]	90.8 [26.6]
		Power	7.2	7.2	7.0	7.1	7.1	6.9	7.0	7.0	6.9
	80 [26.7]	Total kBtu/h [kW]	128.9 [37.8]	126.4 [37.0]	121.8 [35.7]	120.8 [35.4]	118.5 [34.7]	114.2 [33.5]	112.6 [33.0]	110.5 [32.4]	106.5 [31.2]
		Sens kBtu/h [kW]	77.8 [22.8]	74.1 [21.7]	67.2 [19.7]	91.6 [26.8]	87.3 [25.6]	79.1 [23.2]	105.4 [30.9]	100.4 [29.4]	91.0 [26.7]
		Power	7.9	7.8	7.7	7.8	7.7	7.6	7.7	7.6	7.5
	85 [29.4]	Total kBtu/h [kW]	128.6 [37.7]	126.2 [37.0]	121.6 [35.6]	120.5 [35.3]	118.2 [34.6]	113.9 [33.4]	112.4 [32.9]	110.3 [32.3]	106.3 [31.2]
		Sens kBtu/h [kW]	78.1 [22.9]	74.4 [21.8]	67.5 [19.8]	91.9 [26.9]	87.5 [25.6]	79.4 [23.3]	105.7 [31.0]	100.7 [29.5]	91.3 [26.8]
		Power	8.5	8.4	8.3	8.4	8.3	8.2	8.3	8.2	8.1
	90 [32.2]	Total kBtu/h [kW]	128.4 [37.6]	126.0 [36.9]	121.4 [35.6]	120.3 [35.3]	118.0 [34.6]	113.7 [33.3]	112.2 [32.9]	110.0 [32.2]	106.0 [31.1]
		Sens kBtu/h [kW]	78.4 [23.0]	74.7 [21.9]	67.7 [19.8]	92.2 [27.0]	87.8 [25.7]	79.6 [23.3]	106.0 [31.1]	101.0 [29.6]	91.5 [26.8]
		Power	9.1	9.1	8.9	9.1	9.0	8.8	9.0	8.9	8.7
	95 [35]	Total kBtu/h [kW]	128.1 [37.5]	125.7 [36.8]	121.1 [35.5]	120.0 [35.2]	117.8 [34.5]	113.5 [33.3]	111.9 [32.8]	109.8 [32.2]	105.8 [31.0]
		Sens kBtu/h [kW]	78.7 [23.1]	75.0 [22.0]	68.0 [19.9]	92.5 [27.1]	88.1 [25.8]	79.9 [23.4]	106.3 [31.2]	101.3 [29.7]	91.8 [26.9]
		Power	9.8	9.7	9.5	9.7	9.6	9.4	9.6	9.5	9.4
	100 [37.8]	Total kBtu/h [kW]	127.9 [37.5]	125.5 [36.8]	120.9 [35.4]	119.8 [35.1]	117.5 [34.4]	113.3 [33.2]	111.7 [32.7]	109.6 [32.1]	105.6 [30.9]
		Sens kBtu/h [kW]	79.0 [23.2]	75.3 [22.1]	68.2 [20.0]	92.8 [27.2]	88.4 [25.9]	80.1 [23.5]	106.6 [31.2]	101.5 [29.7]	92.1 [27.0]
		Power	10.5	10.4	10.2	10.4	10.3	10.1	10.3	10.2	10.0
	105 [40.6]	Total kBtu/h [kW]	127.7 [37.4]	125.3 [36.7]	120.7 [35.4]	119.6 [35.1]	117.3 [34.4]	113.0 [33.1]	111.4 [32.6]	109.3 [32.0]	105.4 [30.9]
		Sens kBtu/h [kW]	79.3 [23.2]	75.5 [22.1]	68.5 [20.1]	93.1 [27.3]	88.7 [26.0]	80.4 [23.6]	106.9 [31.3]	101.8 [29.8]	92.3 [27.1]
		Power	11.1	11.0	10.8	11.0	10.9	10.7	10.9	10.8	10.6
	110 [43.3]	Total kBtu/h [kW]	127.4 [37.3]	125.0 [36.6]	120.5 [35.3]	119.3 [35.0]	117.1 [34.3]	112.8 [33.1]	111.2 [32.6]	109.1 [32.0]	105.1 [30.8]
		Sens kBtu/h [kW]	79.6 [23.3]	75.8 [22.2]	68.7 [20.1]	93.4 [27.4]	89.0 [26.1]	80.7 [23.7]	107.2 [31.4]	102.1 [29.9]	92.6 [27.1]
		Power	11.8	11.7	11.5	11.7	11.6	11.4	11.6	11.5	11.3
	115 [46.1]	Total kBtu/h [kW]	127.2 [37.3]	124.8 [36.6]	120.2 [35.2]	119.1 [34.9]	116.8 [34.2]	112.6 [33.0]	111.0 [32.5]	108.9 [31.9]	104.9 [30.7]
		Sens kBtu/h [kW]	79.9 [23.4]	76.1 [22.3]	69.0 [20.2]	93.7 [27.5]	89.2 [26.1]	80.9 [23.7]	107.5 [31.5]	102.4 [30.0]	92.8 [27.2]
		Power	12.5	12.3	12.1	12.4	12.3	12.0	12.3	12.2	12.0
	120 [48.9]	Total kBtu/h [kW]	127.0 [37.2]	124.5 [36.5]	120.0 [35.2]	118.8 [34.8]	116.6 [34.2]	112.3 [32.9]	110.7 [32.4]	108.6 [31.8]	104.7 [30.7]
		Sens kBtu/h [kW]	80.2 [23.5]	76.4 [22.4]	69.3 [20.3]	94.0 [27.5]	89.5 [26.2]	81.2 [23.8]	107.8 [31.6]	102.7 [30.1]	93.1 [27.3]
		Power	13.1	13.0	12.8	13.1	12.9	12.7	13.0	12.8	12.6
	125 [51.7]	Total kBtu/h [kW]	126.7 [37.1]	124.3 [36.4]	119.8 [35.1]	118.6 [34.8]	116.4 [34.1]	112.1 [32.9]	110.5 [32.4]	108.4 [31.8]	104.5 [30.6]
		Sens kBtu/h [kW]	80.5 [23.6]	76.7 [22.5]	69.5 [20.4]	94.3 [27.6]	89.8 [26.3]	81.4 [23.9]	108.1 [31.7]	103.0 [30.2]	93.3 [27.3]
		Power	13.8	13.7	13.5	13.7	13.6	13.4	13.6	13.5	13.3

DR —Depression ratio
dbE —Entering air dry bulb
wbE—Entering air wet bulb

Total —Total capacity x 1000 Btu/h
Sens —Sensible capacity x 1000 Btu/h
Power —kW input

NOTES:
① When the entering air dry bulb is other than 80°F [27°C], adjust the sensible capacity from the table by adding [1.10 x CFM x (1 – DR) x (dbE – 80)].

[ ] Designates Metric Conversions

HEATING PERFORMANCE DATA—RPCY2090 + RHCYP2090

IDB			60°F [15.6°C]			70°F [21.1°C]			80°F [26.7°C]		
CFM [L/s]			3350 [1581]	2875 [1357]	2425 [1144]	3350 [1581]	2875 [1357]	2425 [1144]	3350 [1581]	2875 [1357]	2425 [1144]
OUTDOOR DRY BULB TEMPERATURE °F [°C]	0 [-17.8]	Total kBtu/h [kW]	44.2 [13.0]	43.7 [12.8]	43.2 [12.7]	41.7 [12.2]	41.2 [12.1]	40.8 [12.0]	39.2 [11.5]	38.8 [11.4]	38.3 [11.2]
		Power	4.8	4.9	5.0	5.6	5.8	5.9	6.5	6.6	6.7
	5 [-15]	Total kBtu/h [kW]	49.4 [14.5]	48.8 [14.3]	48.3 [14.2]	46.9 [13.7]	46.3 [13.6]	45.8 [13.4]	44.4 [13.0]	43.9 [12.9]	43.4 [12.7]
		Power	4.9	5.1	5.2	5.8	5.9	6.0	6.6	6.8	6.9
	10 [-12.2]	Total kBtu/h [kW]	54.6 [16.0]	53.9 [15.8]	53.3 [15.6]	52.1 [15.3]	51.5 [15.1]	50.9 [14.9]	49.6 [14.5]	49.0 [14.4]	48.5 [14.2]
		Power	5.1	5.2	5.3	5.9	6.1	6.2	6.8	6.9	7.1
	15 [-9.4]	Total kBtu/h [kW]	59.8 [17.5]	59.1 [17.3]	58.4 [17.1]	57.3 [16.8]	56.6 [16.6]	56.0 [16.4]	54.8 [16.1]	54.2 [15.9]	53.5 [15.7]
		Power	5.3	5.4	5.5	6.1	6.2	6.3	6.9	7.1	7.2
	20 [-6.7]	Total kBtu/h [kW]	65.0 [19.1]	64.2 [18.8]	63.5 [18.6]	62.5 [18.3]	61.7 [18.1]	61.1 [17.9]	60.0 [17.6]	59.3 [17.4]	58.6 [17.2]
		Power	5.4	5.5	5.6	6.2	6.4	6.5	7.1	7.2	7.4
	25 [-3.9]	Total kBtu/h [kW]	70.1 [20.5]	69.3 [20.3]	68.6 [20.1]	67.7 [19.8]	66.9 [19.6]	66.1 [19.4]	65.2 [19.1]	64.4 [18.9]	63.7 [18.7]
		Power	5.6	5.7	5.8	6.4	6.5	6.7	7.2	7.4	7.5
	30 [-1.1]	Total kBtu/h [kW]	75.3 [22.1]	74.5 [21.8]	73.6 [21.6]	72.9 [21.4]	72.0 [21.1]	71.2 [20.9]	70.4 [20.6]	69.5 [20.4]	68.8 [20.2]
		Power	5.7	5.8	5.9	6.6	6.7	6.8	7.4	7.5	7.7
	35 [1.7]	Total kBtu/h [kW]	80.5 [23.6]	79.6 [23.3]	78.7 [23.1]	78.0 [22.9]	77.1 [22.6]	76.3 [22.4]	75.6 [22.2]	74.7 [21.9]	73.8 [21.6]
		Power	5.9	6.0	6.1	6.7	6.8	7.0	7.5	7.7	7.9
	40 [4.4]	Total kBtu/h [kW]	85.7 [25.1]	84.7 [24.8]	83.8 [24.6]	83.2 [24.4]	82.3 [24.1]	81.4 [23.9]	80.8 [23.7]	79.8 [23.4]	78.9 [23.1]
		Power	6.0	6.1	6.3	6.9	7.0	7.1	7.7	7.9	8.0
	45 [7.2]	Total kBtu/h [kW]	90.9 [26.6]	89.9 [26.3]	88.9 [26.1]	88.4 [25.9]	87.4 [25.6]	86.4 [25.3]	85.9 [25.2]	84.9 [24.9]	84.0 [24.6]
		Power	6.2	6.3	6.4	7.0	7.2	7.3	7.9	8.0	8.2
	50 [10]	Total kBtu/h [kW]	96.1 [28.2]	95.0 [27.8]	93.9 [27.5]	93.6 [27.4]	92.5 [27.1]	91.5 [26.8]	91.1 [26.7]	90.1 [26.4]	89.1 [26.1]
		Power	6.3	6.5	6.6	7.2	7.3	7.5	8.0	8.2	8.3

IDB—Indoor air dry bulb

[ ] Designates Metric Conversions

HEATING PERFORMANCE DATA—RPCY2120 + RHCYP2120

IDB			60°F [15.5°C]			70°F [21.1°C]			80°F [26.7°C]		
CFM [L/s]			3975 [1876]	4000 [1888]	2875 [1357]	3975 [1876]	4000 [1888]	2875 [1357]	3975 [1876]	4000 [1888]	2875 [1357]
OUTDOOR DRY BULB TEMPERATURE °F [°C]	0 [-17.8]	Total kBtu/h [kW]	43.9 [12.9]	44.0 [12.9]	43.1 [12.6]	40.4 [11.8]	40.4 [11.8]	39.6 [11.6]	36.9 [10.8]	36.9 [10.8]	36.2 [10.6]
		Power	6.8	6.8	7.0	7.5	7.5	7.8	8.3	8.3	8.6
	5 [-15]	Total kBtu/h [kW]	51.0 [14.9]	51.0 [14.9]	50.0 [14.7]	47.4 [13.9]	47.4 [13.9]	46.5 [13.6]	43.9 [12.9]	43.9 [12.9]	43.0 [12.6]
		Power	6.9	6.9	7.1	7.7	7.7	7.9	8.4	8.4	8.7
	10 [-12.2]	Total kBtu/h [kW]	58.0 [17.0]	58.0 [17.0]	56.8 [16.6]	54.4 [15.9]	54.5 [16.0]	53.4 [15.7]	50.9 [14.9]	50.9 [14.9]	49.9 [14.6]
		Power	7.0	7.0	7.3	7.8	7.8	8.1	8.5	8.5	8.8
	15 [-9.4]	Total kBtu/h [kW]	65.0 [19.1]	65.0 [19.1]	63.7 [18.7]	61.4 [18.0]	61.5 [18.0]	60.2 [17.6]	57.9 [17.0]	57.9 [17.0]	56.8 [16.6]
		Power	7.2	7.1	7.4	7.9	7.9	8.2	8.7	8.7	9.0
	20 [-6.7]	Total kBtu/h [kW]	72.0 [21.1]	72.0 [21.1]	70.6 [20.7]	68.4 [20.0]	68.5 [20.1]	67.1 [19.7]	64.9 [19.0]	64.9 [19.0]	63.6 [18.6]
		Power	7.3	7.3	7.5	8.1	8.0	8.3	8.8	8.8	9.1
	25 [-3.9]	Total kBtu/h [kW]	79.0 [23.2]	79.0 [23.2]	77.4 [22.7]	75.4 [22.1]	75.5 [22.1]	74.0 [21.7]	71.9 [21.1]	72.0 [21.1]	70.5 [20.7]
		Power	7.4	7.4	7.7	8.2	8.2	8.5	8.9	8.9	9.2
	30 [-1.1]	Total kBtu/h [kW]	86.0 [25.2]	86.0 [25.2]	84.3 [24.7]	82.5 [24.2]	82.5 [24.2]	80.8 [23.7]	78.9 [23.1]	79.0 [23.2]	77.4 [22.7]
		Power	7.5	7.5	7.8	8.3	8.3	8.6	9.1	9.1	9.4
	35 [1.7]	Total kBtu/h [kW]	93.0 [27.3]	93.0 [27.3]	91.2 [26.7]	89.5 [26.2]	89.5 [26.2]	87.7 [25.7]	85.9 [25.2]	86.0 [25.2]	84.2 [24.7]
		Power	7.7	7.7	7.9	8.4	8.4	8.7	9.2	9.2	9.5
	40 [4.4]	Total kBtu/h [kW]	100.0 [29.3]	100.0 [29.3]	98.0 [28.7]	96.5 [28.3]	96.5 [28.3]	94.6 [27.7]	92.9 [27.2]	93.0 [27.3]	91.1 [26.7]
		Power	7.8	7.8	8.1	8.6	8.6	8.9	9.3	9.3	9.6
	45 [7.2]	Total kBtu/h [kW]	107.0 [31.4]	107.0 [31.4]	104.9 [30.7]	103.5 [30.3]	103.5 [30.3]	101.4 [29.7]	99.9 [29.3]	100.0 [29.3]	98.0 [28.7]
		Power	7.9	7.9	8.2	8.7	8.7	9.0	9.5	9.4	9.8
	50 [10]	Total kBtu/h [kW]	114.0 [33.4]	114.1 [33.4]	111.8 [32.8]	110.5 [32.4]	110.5 [32.4]	108.3 [31.7]	106.9 [31.3]	107.0 [31.4]	104.8 [30.7]
		Power	8.1	8.1	8.3	8.8	8.8	9.1	9.6	9.6	9.9

IDB—Indoor air dry bulb

[ ] Designates Metric Conversions

UNIT DIMENSIONS AND WEIGHTS 7.5 TON

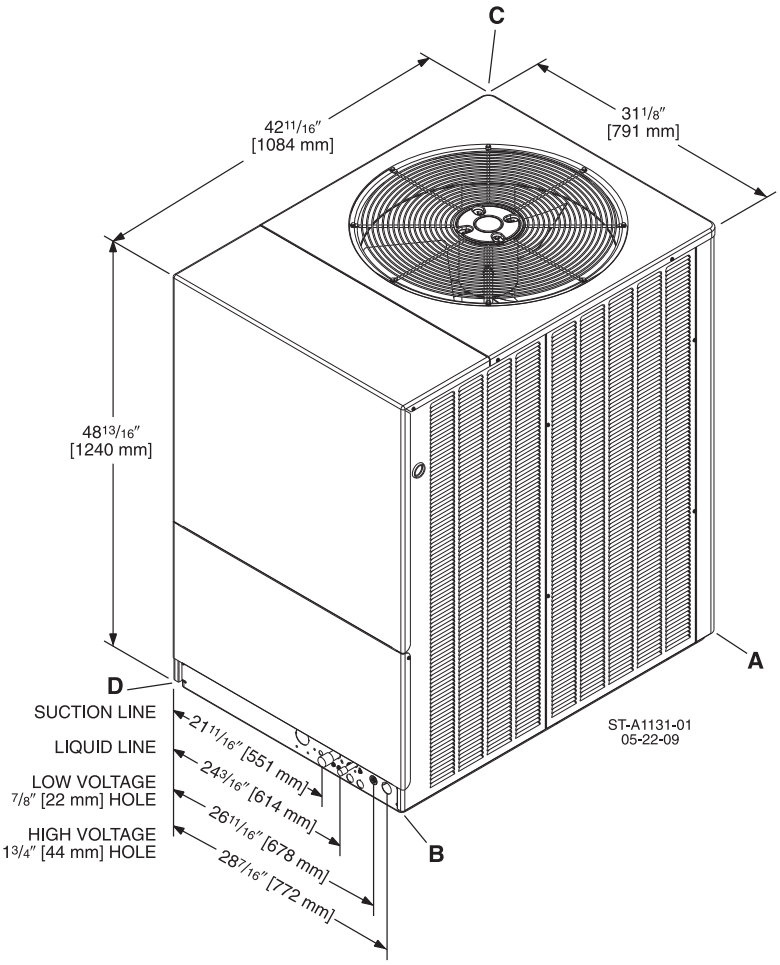

7.5 TON

MODEL	TOTAL WEIGHT LBS. [kg]	CORNER WEIGHTS, LBS. [kg]			
		A	B	C	D
RPCY2090	428 [194.1]	75 [34]	107 [49]	79 [36]	167 [78]

[ ] Designates Metric Conversions

UNIT DIMENSIONS AND WEIGHTS 10 TON

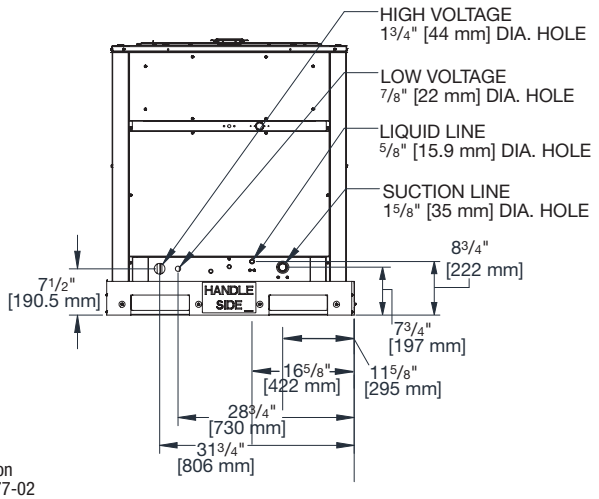

Illustration
ST-A1377-02

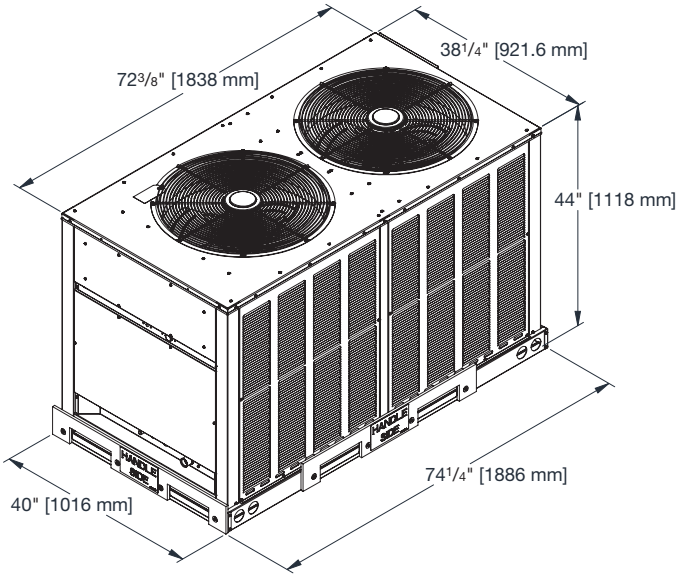

10 TON

MODEL	TOTAL WEIGHT LBS. [kg]	CORNER WEIGHTS, LBS. [kg]			
		A	B	C	D
RPCY2120	642 [291]	167 [76]	154 [70]	167 [76]	154 [70]

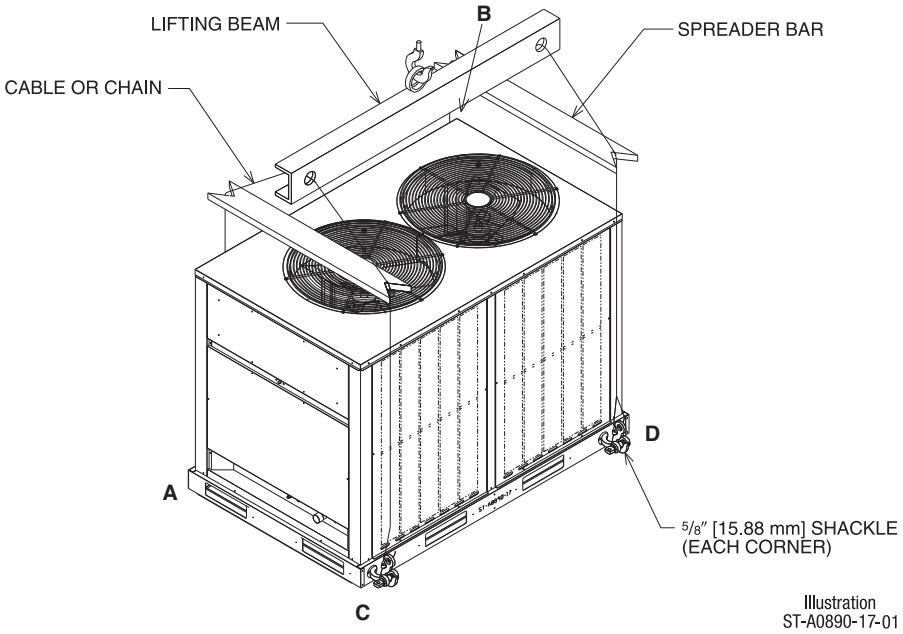

Illustration
ST-A0890-17-01

[ ] Designates Metric Conversions

TYPICAL REFRIGERANT PIPING RECOMMENDATIONS

General Notes:

1. Vertical risers not to exceed 100 feet [30.48 m].
2. Locate the remote condensing unit and indoor air handler as close together as possible to minimize piping runs.
3. Remote condensing units are shipped with a nitrogen holding charge. Evacuate remote condensing unit before charging with refrigerant.
4. Runs between remote condensing unit and indoor air handler are not to exceed 200 feet [60.96 m] linear length.
5. The minimum velocity line (1500 FPM) [7.5 m/s] is recommended.
6. With the outdoor unit located below the indoor air handler, all vertical vapor lines must not exceed 1-1/8" [28.58 mm] O.D.
7. For suction pressure drop (PSIG) [6.9 kPa], multiply percent (%) loss by 1.8.
8. Size vapor lines for no more than a 5 PSIG [34.5 kPa] pressure drop (2.54% capacity loss) which corresponds to approximately 2ºF [-16.7ºC] loss.
9. All vertical vapor lines, 3 feet [.91 m] or more in length, must have a short radius oil trap at the bottom of the riser.
10. All vertical vapor lines, 30 feet [9.14 m] or more in length, must have short radius oil traps every 15 to 20 feet [4.57 to 6.10 m] of run.

[ ] Designates Metric Conversions

INDOOR UNIT ABOVE OUTDOOR UNIT

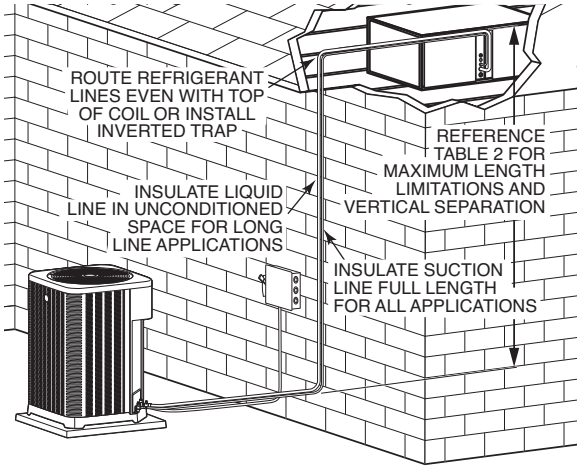

INDOOR UNIT BELOW OUTDOOR UNIT

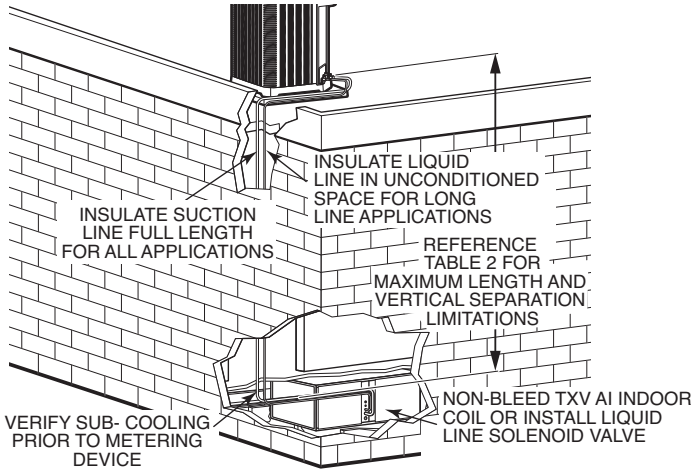

TYPICAL REFRIGERANT PIPING RECOMMENDATIONS (CONTINUED)

REQUIRED OZ. R-454B CHARGE PER FT. [m] OF TUBING

TUBE SIZE		LIQUID TUBE		VAPOR TUBE		TOTAL		INTERNAL VOLUME	
OD (IN)	OD (MM)	OZ / FT	KG/M	OZ / FT	KG/M	OZ / FT	KG/M	FT^3/FT	M^3/M
3/8	9.5	0.5	0.05	0.0	0.00	0.5	0.05	0.000555	0.000048
1/2	12.7	1.0	0.09	0.0	0.00	1.0	0.09	0.00108	0.0000929
5/8	15.9	1.5	0.14	0.1	0.00	1.6	0.15	0.00173	0.000149
3/4	19.1	2.2	0.21	0.1	0.01	2.3	0.21	0.00248	0.000214
7/8	22.2	3.1	0.29	0.1	0.01	3.2	0.30	0.003430	0.000296
1	25.4	4.0	0.37	0.1	0.01	4.2	0.39	0.004500	0.000389
1-1/8	28.6	5.2	0.49	0.2	0.02	5.4	0.50	0.00585	0.000503
1-1/4	31.8	6.5	0.60	0.2	0.02	6.7	0.62	0.00721	0.000623
1-3/8	34.9	7.3	0.68	0.2	0.02	7.6	0.70	0.008165445	0.000758595
1-1/2	38.1	9.4	0.87	0.3	0.03	9.7	0.90	0.0105	0.00091
1-5/8	41.3	11.2	1.04	0.4	0.03	11.6	1.08	0.0125	0.00108
2-1/8	54.0	19.5	1.82	0.6	0.06	20.2	1.88	0.0218	0.00188

Quantities based on 110°F liquid and 45°F vapor.

Guide Specifications RPCY2— 090-120

You may copy this document directly into your building specification. This specification is written to comply with the 2016 version of the "master format" as published by the Construction Specification Institute. www.csinet.org.

HP CONDENSING UNIT

HVAC Guide Specifications

Size Range: 7.5 & 10 Nominal Tons

1.01 Quality Assurance:

A. Unit shall be rated in accordance with AHRI Standard 340/360.
B. Unit construction shall comply with ANSI/ASHRAE 15 safety code latest revision and comply with NEC.
C. Unit shall be constructed in accordance with UL 60335-2-40 standard and shall carry the UL label.
D. Unit cabinet shall be capable of withstanding 500 hour salt spray exposure per ASTM® B117 (scribed specimen).
E. Air-cooled condenser coils for hermetic scroll compressor units shall be leak tested at 250 PSIG, and pressure tested at 450 PSIG.
F. Unit shall be subjected to run test on the assembly line.
G. Unit meets ASHRAE 90.1 2022 minimum efficiency requirements.

1.02 Manufacturer Qualifications

A. Unit shall be manufactured in a facility registered to ISO 9001:2015 manufacturing quality standard.

1.03 Installer Qualifications

A. The installer shall be trained to install and service equipment with A2L refrigerants.

1.04 Delivery, Storage, and Handling:

A. Unit shall be shipped as single package only, and shall be stored and handled according to unit manufacturer's recommendations.
B. Unit shall be stored and handled per manufacturer's recommendations.
C. Refer to the manufacturer's installation and operation manual for guidance on how to properly lift the unit:
D. Unit shall only be stored or positioned in the upright position.
E. Shall be able to stack three high from ground for storage.

1.05 Unit Cabinet:

A. Unit cabinet shall be constructed of galvanized steel and coated with a pre-painted baked enamel finish.
B. A heavy-gauge roll-formed perimeter base rail with forklift slots and lifting holes shall be provided to facilitate rigging.
    i. Unit cabinet exterior paint shall be pre-painted steel.
C. No base pan penetration, other than those authorized by the manufacturer, is permitted:
    i. Heavy-Gauge Base Pan and Base Rail 120:
        a. Unit shall have base rails on a minimum of 4 sides.
        b. Holes shall be provided in the base rails for rigging shackles to facilitate maneuvering and overhead rigging.
        c. Holes shall be provided in the base rail for moving the rooftop for fork truck.
        d. Base rail shall be a minimum of 14 gauge thickness.
    iii. Side Panel/Back Panel
        a. Top panel is removable for service access.
    iv. Electrical Connections
        a. All unit power wiring shall enter unit cabinet a single, factory-prepared, continuous raised flange opening in the base pan.
            1. Thru-the-base capability for 7.5T
                a. Electrical connections are located close to the ground for a neat-looking installation.
    v. Component access panels (standard):
        a. Cabinet panels shall be easily opened for servicing.
        b. Control box as well as the compressor and other refrigerant controls being accessible through access panels. Control box may be open without affecting the normal operation of the unit. Condenser fan motors are accessible by removing wire grilles.
        c. Fasteners shall be permanently attached.

1.06 Condenser Fans:

A. Condenser fans shall be direct driven PSC, propeller type, discharging air vertically upward.
B. Fan blades shall be balanced.
C. Condenser fan discharge openings shall be equipped with PVC-coated steel wire safety guards.
D. Condenser fan and motor shaft shall be corrosion resistant.
E. Condenser fan motors are accessible by removing wire grilles.

1.07 Refrigerant Components

A. The refrigerant circuit shall include the following control, safety, and maintenance features:
   i. Refrigerant filter drier.
   ii. Service gauge connections on suction and discharge lines.
   iii. External pressure gauge ports allows pressures to be checked on the side, without removing access panel.

1.08 Compressors:

A. Compressor shall be of the hermetic scroll type.
B. Compressor shall be mounted on rubber grommets.
C. Compressors shall include overload protection.
D. Compressors shall be equipped with a crankcase heater.
E. Compressor shall be equipped with internal high pressure and high temperature protection.

1.09 Condenser Coils

A. Standard Aluminum Fin - Copper Tube Coils:
   i. Condenser coils shall have aluminum lanced plate fins mechanically bonded to seamless internally grooved copper tubes with all joints brazed.
   ii. Condenser coils shall be leak tested to 250 PSIG, pressure tested to 450 PSIG, and qualified to UL 60335-2-40.

1.10 Controls and Safeties:

A. Minimum control functions shall include:
   i. Control wire terminal blocks.
   ii. Compressor lockout on auto-reset safety until reset from thermostat.
   iii. Minimum safety devices which are equipped with automatic reset (after resetting first at thermostat), shall include:
      a. High discharge pressure cutout.
      b. Low pressure cutout.
B. Turn off electric power at the fuse box or service panel before making any electrical connections.
C. The unit must be permanently grounded.
D. Components are not compatible between different refrigerants. Do not use R-410A service equipment or components on R-454B equipment. System or part failure could occur.

1.11 Operating Characteristics:

A. Standard unit shall be capable to operate up to 125.6°F (52°C) and down to 40°F (4°C).
B. Compressor with standard controls shall be capable of operation down to 50°F (10°C), ambient outdoor temperatures. Low ambient accessory kit is necessary if mechanically cooling at ambient temperatures to 0°F (-17.7°C).

1.12 Electrical Requirements:

A. Nominal unit electrical characteristics:
   i. Shall be 208/230V, 3 PH, 60 Hz. The unit shall be capable of satisfactory operation within voltage limits of 187V to 253V.
   ii. Shall be 460V, 3 PH, 60 Hz. The unit shall be capable of satisfactory operation within voltage limits of 414V to 506V.
   iii. Shall be 575V, 3 PH, 60 Hz. The unit shall be capable of satisfactory operation within voltage limits of 514V to 610V.
B. Unit control circuit shall contain a 24V transformer for unit control.
C. Main power supply voltage, phase, and frequency must match those required by the manufacturer.

1.13 Special Features:

A. Low-Ambient Temperature Control
   i. A low-ambient temperature control shall be available as a factory-installed option or as a field-installed accessory. This low-ambient control shall regulate the speed of the condenser-fan motors in response to the saturated condensing temperature of the unit. The control shall maintain correct condensing pressure opens at 250 PSIG and closes at 450 PSIG. Allows unit to operate to 0°F.
B. Condenser Coil Grille
   i. Grille shall add decorative appearance to unit and protect condenser coil from large objects and vandalism.

GENERAL TERMS OF LIMITED WARRANTY*

Sure Comfort® will furnish a replacement for any part of this product which fails in normal use and service within the applicable periods stated, in accordance with the terms of the limited warranty.

***For Complete Details of the Limited Warranty, Including Applicable Terms and Conditions, See Your Local Installer or Contact the Manufacturer for a Copy.**

Compressor
Commercial Applications .....Five (5) Years
Parts
Commercial Applications.....One (1) Year

Before proceeding with installation, refer to installation instructions packaged with each model, as well as complying with all Federal, State, Provincial, and Local codes, regulations, and practices.

© 2026 Rheem Manufacturing Company. Trademarks are property of their respective owners.

In keeping with its policy of continuous progress and product improvement, manufacturer reserves the right to make changes without notice.

5600 Old Greenwood Road
Fort Smith, Arkansas 72908 • SureComfort.com

125 Edgeware Road, Unit 1
Brampton, Ontario • L6Y 0P5 • SureComfort.ca

3/26 FORM NO. PSC-853 REV. 2