S-7200A

SINGLE NEEDLE DIRECT DRIVE
STRAIGHT LOCK STITCHER WITH THREAD TRIMMER

Thank you very much for buying a BROTHER sewing machine. Before using your new machine, please read the safety instructions below and the explanations given in the instruction manual.

With industrial sewing machines, it is normal to carry out work while positioned directly in front of moving parts such as the needle and thread take-up, and consequently there is always a danger of injury that can be caused by these parts. Follow the instructions from training personnel and instructors regarding safe and correct operation before operating the machine so that you will know how to use it correctly.

SAFETY INSTRUCTIONS

1. Safety indications and their meanings

This instruction manual and the indications and symbols that are used on the machine itself are provided in order to ensure safe operation of this machine and to prevent accidents and injury to yourself or other people.

Indications

⚠ **DANGER**	The instructions which follow this term indicate situations where failure to follow the instructions will almost certainly result in death or severe injury.
⚠ **CAUTION**	The instructions which follow this term indicate situations where failure to follow the instructions could cause injury when using the machine or physical damage to equipment and surroundings.

Symbols

. . . . . This symbol (△) indicates something that you should be careful of. The picture inside the triangle indicates the nature of the caution that must be taken.
(For example, the symbol at left means “beware of injury”.)

. . . . . This symbol (⃠) indicates something that you <u>must not</u> do.

. . . . . This symbol (●) indicates something that you <u>must</u> do. The picture inside the circle indicates the nature of the thing that must be done.
(For example, the symbol at left means “you must make the ground connection”.)

2. Notes on safety

DANGER

Wait at least 5 minutes after turning off the power switch and disconnecting the power cord from the wall outlet before opening the face plate of the control box. Touching areas where high voltages are present can result in severe injury.

CAUTION

Environmental requirements

Use the sewing machine in an area which is free from sources of strong electrical noise such as high-frequency welders.
Sources of strong electrical noise may cause problems with correct operation.

Any fluctuations in the power supply voltage should be within ±10% of the rated voltage for the machine.
Voltage fluctuations which are greater than this may cause problems with correct operation.

The power supply capacity should be greater than the requirements for the sewing machine's electrical consumption.
Insufficient power supply capacity may cause problems with correct operation.

The ambient temperature should be within the range of 5°C to 35°C during use.
Temperatures which are lower or higher than this may cause problems with correct operation.

The relative humidity should be within the range of 45% to 85% during use, and no dew formation should occur in any devices.
Excessively dry or humid environments and dew formation may cause problems with correct operation.

Avoid exposure to direct sunlight during use.
Exposure to direct sunlight may cause problems with correct operation.

In the event of an electrical storm, turn off the power and disconnect the power cord from the wall outlet.
Lightning may cause problems with correct operation.

Installation

Machine installation should only be carried out by a qualified technician.

Contact your Brother dealer or a qualified electrician for any electrical work that may need to be done.

The sewing machine weighs more than 50 kg. The installation should be carried out by two or more people.

Do not connent the power cord until installation is complete. The machine may operate if the treadle is depressed by mistake, which could result in injury.

Turn off the power switch before inserting or removing the plug, otherwise damage to the control box could result.

Be sure to connect the ground. If the ground connection is not secure, you run a high risk of receiving a serious electric shock, and problems with correct operation may also occur.

When securing the cords, do not bend the cords excessively or fasten them too hard with staples, otherwise there is the danger that fire or electric shocks could occur.

If using a work table which has casters, the casters should be secured in such a way so that they cannot move.

Use both hands to hold the machine head when tilting it back or returning it to its original position. If only one hand is used, the weight of the machine head may cause your hand to slip, and your hand may get caught.

Be sure to wear protective goggles and gloves when handling the lubricating oil and grease, so that they do not get into your eyes or onto your skin, otherwise inflammation can result.
Furthermore, do not drink the oil or eat the grease under any circumstances, as they can cause vomiting and diarrhea.
Keep the oil out of the reach of children.

CAUTION

Sewing

This sewing machine should only be used by operators who have received the necessary training in safe use beforehand.

The sewing machine should not be used for any applications other than sewing.

Be sure to wear protective goggles when using the machine.
If goggles are not worn, there is the danger that if a needle breaks, parts of the broken needle may enter your eyes and injury may result.

Turn off the power switch at the following times.
The machine may operate if the treadle is depressed by mistake, which could result in injury.

- When threading the needle
- When replacing the bobbin and needle
- When not using the machine and when leaving the machine unattended

If using a work table which has casters, the casters should be secured in such a way so that they cannot move.

Attach all safety devices before using the sewing machine. If the machine is used without these devices attached, injury may result.

Do not touch any of the moving parts or press any objects against the machine while sewing, as this may result in personal injury or damage to the machine.

Use both hands to hold the machine head when tilting it back or returning it to its original position. If only one hand is used, the weight of the machine head may cause your hand to slip, and your hand may get caught.

If an error occurs in machine, or if abnormal noises or smells are noticed, immediately turn off the power switch. Then contact your nearest Brother dealer or a qualified technician.

If the machine develops a problem, contact your nearest Brother dealer or a qualified technician.

Cleaning

Turn off the power switch before carrying out cleaning. The machine may operate if the treadle is depressed by mistake, which could result in injury.

Use both hands to hold the machine head when tilting it back or returning it to its original position. If only one hand is used, the weight of the machine head may cause your hand to slip, and your hand may get caught.

Be sure to wear protective goggles and gloves when handling the lubricating oil and grease, so that they do not get into your eyes or onto your skin, otherwise inflammation can result.
Furthermore, do not drink the oil or eat the grease under any circumstances, as they can cause vomiting and diarrhea.
Keep the oil out of the reach of children.

Use only the proper replacement parts as specified by Brother.

3.Warning labels

The following warning labels appear on the sewing machine.
Please follow the instructions on the labels at all times when using the machine. If the labels have been removed or are difficult to read, please contact your nearest Brother dealer.

1

	⚠ 危 険	⚠ 危 险	
	高電圧部分にふれて、大けがをすることがある。電源を切り、5分たってからカバーをはずすこと。	触摸高压电部分，会导致受伤。在切断电源5分钟后，再开启盖罩。	
⚠ DANGER	⚠ GEFAHR	⚠ DANGER	⚠ PELIGRO
Hazardous voltage will cause injury. Turn off main switch and wait 5minutes before opening this cover.	Hochspannung verletzungsgefahr! Bitte schalten sie den hauptschalter aus und warten sie 5 minuten, bevor sie diese abdeckung öffnen.	Un voltage non adapte provoque des blessures. Eteindre l'interrupteur et attendre 5 minutes avant d'ouvrir le capot.	Un voltaje inadecuado puede provocar las heridas.Apagar el interruptor principal y esperar 5 minutos antes de abrir esta cubierta.

2

⚠ 注 意

動く部分でけがをする。
安全保護装置をつけて、縫製作業をすること。電源を切ってから、糸通し、ボビンや針の交換、掃除や調整をすること。

⚠ CAUTION

Moving parts may cause injury. Operate with safety devices. Turn off main switch before threading, changing bobbin and needle, cleaning etc.

3 Be sure to connect the ground. If the ground connection is not secure, you run a high risk of receiving a serious electric shock, and problems with correct operation may also occur.

Safety devices:
(A) Finger guard
(B) Thread take-up cover

4 Direction of operation

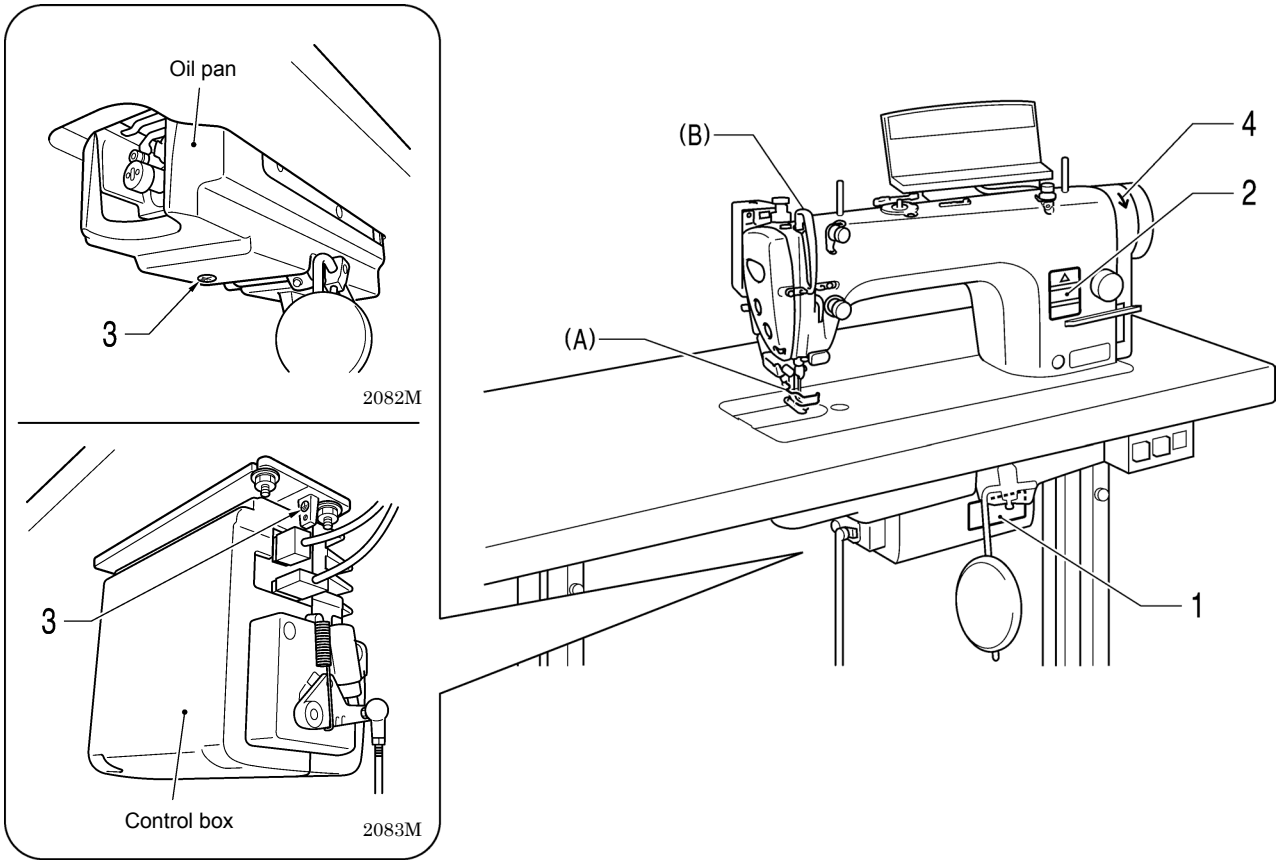

2084M

CONTENTS

1. NAMES OF MAJOR PARTS..... 1

2. MACHINE SPECIFICATIONS..... 2

3. INSTALLATION 3

3-1. Table processing diagram..... 4
3-2. Installation..... 4
3-3. Lubrication (-40[], 43[] specifications) 8
3-4. Connecting the cords 9
3-4-1. Opening the control box cover..... 9
3-4-2. Connecting the cords 9
3-5. Test operation (Operating the treadle)..... 12

4. PREPARATION BEFORE SEWING.... 13

4-1. Installing the needle 13
4-2. Removing the bobbin case..... 13
4-3. Winding the lower thread 14
4-4. Installing the bobbin case..... 14
4-5. Threading the upper thread..... 15
4-6. Adjusting the stitch length 15
4-7. Using the thread wiper 16
4-8. Using the knee lifter 16

5. USING THE OPERATION PANEL (BASIC OPERATIONS)..... 17

5-1. Names and functions 17
5-2. Sewing start and end backtack stitches 19
5-3. Sewing fixed stitches..... 20
5-4. Sewing name labels..... 21
5-5. Sewing pleat presser stitches 22
5-6. Using the lower thread counter 23

6. USING THE OPERATION PANEL (ADVANCED OPERATIONS)..... 24

6-1. Names and functions 24
6-2. Adjusting the needle up stop position 25
6-3. LOCK key..... 25
6-4. Resetting all settings to their defaults..... 25

7. SEWING 26

7-1. Sewing.....26
7-2. Backtacking 26
7-3. Sewing condensed stitches 27

8. THREAD TENSION 28

8-1. Adjusting the thread tension 28
8-2. Adjusting the presser foot pressure 29
8-3. Adjusting the trailing length after thread trimming.....29

9. CLEANING 30

9-1. Daily cleaning procedures 30
9-2. Applying grease (When “GREASEUP” appears).....33

10. TROUBLESHOOTING 35

10-1. Sewing.....35
10-2. Error code displays.....39

1. NAMES OF MAJOR PARTS

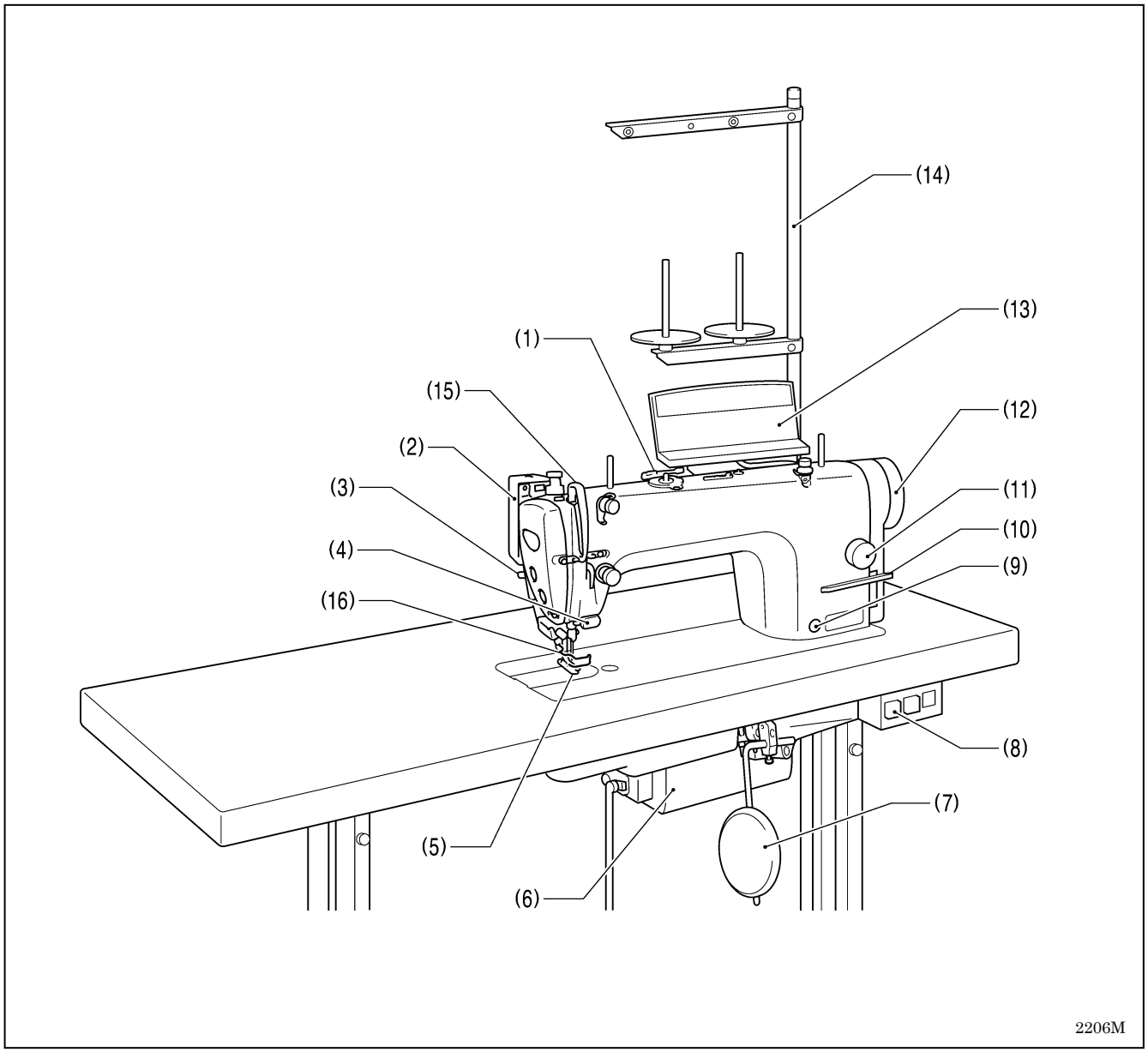

(1) Bobbin winder
(2) Thread wiper
(3) Lifting lever
(4) Quick reverse (Actuator)
(5) Presser foot
(6) Control box
(7) Knee lifter assembly
(8) Power switch
(9) Oil gauge window (-40[], 43[] specifications)
(10) Reverse lever
(11) Stitch length dial
(12) Machine pulley
(13) Operation panel
(14) Cotton stand

Safety devices
(15) Thread take-up cover
(16) Finger guard

2. MACHINE SPECIFICATIONS

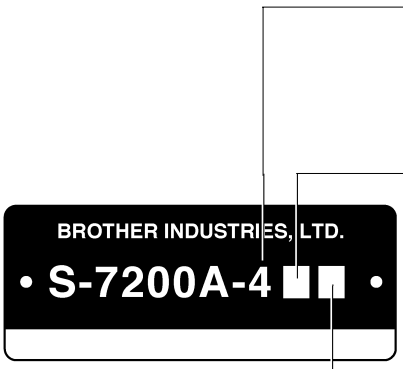

	4
Quick reverse	○
Thread wiper	○

	0	3	5
Lubrication type	Minimum lubrication	Semi dry	Complete dry

	S	3	5
Use	For light-weight and difficult-to-sew materials	For medium-weight materials	For heavy-weight materials

		-43S -45S	-453	-403 -433	-405
Max. sewing speed		4,000 rpm		5,000 rpm*	4,500 rpm*
Start backtacking and continuous backtacking speed		220–1,800 rpm			
End backtacking speed		1,800 rpm			
Max. stitch length		4.2 mm	5 mm		
Presser foot height	Lifting lever	6 mm			
	Knee lifter	16 mm			
Feed dog height		0.8 mm			1.2 mm
Needle (DB×1, DP×5)		NS #9–#11	#11–#18		#19–#22
Motor		AC servo motor (4-pole, 450W)			
Control circuit		Microprocessor			

*…When sewing at speeds of 4,000 rpm or higher, set the stitch length to 4.2 mm or less.

Rotary hook

-43S	-403 -433	-405	-45S -453
Lubricated / for light materials	Lubricated / for medium materials	Lubricated / for heavy materials	Rotary hook RP (lubrication-free rotary hook)

Lubricating oil

	-40[]	-43[]	-45[]
Rotary hook	High-speed spindle	High-speed spindle	–
Needle bar		Special Brother grease	Special Brother grease

3. INSTALLATION

⚠ CAUTION

- Machine installation should only be carried out by a qualified technician.
- Contact your Brother dealer or a qualified electrician for any electrical work that may need to be done.
- The sewing machine weighs more than 50 kg. The installation should be carried out by two or more people.
- Do not connect the power cord until installation is complete. The machine may operate if the treadle is depressed by mistake, which could result in injury.
- Use both hands to hold the machine head when tilting it back or returning it to its original position. If only one hand is used, the weight of the machine head may cause your hand to slip, and your hand may get caught.

About the machine set-up location

- Do not set up this sewing machine near other equipment such as televisions, radios or cordless telephones, otherwise such equipment may be affected by electronic interference from the sewing machine.
- The sewing machine should be plugged directly into an AC wall outlet. Operation problems may result if extension cords are used.

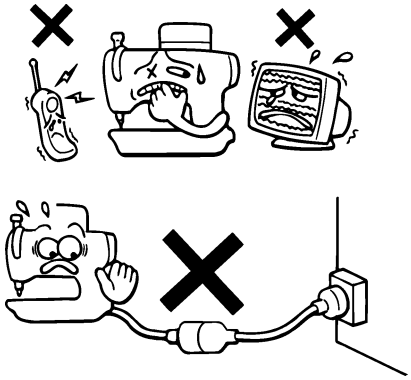

2086M

Carrying the machine

- The machine should be carried by the arm by two people as shown in the illustration.
  - * Hold the motor cover (A) by hand also so that the pulley does not rotate.

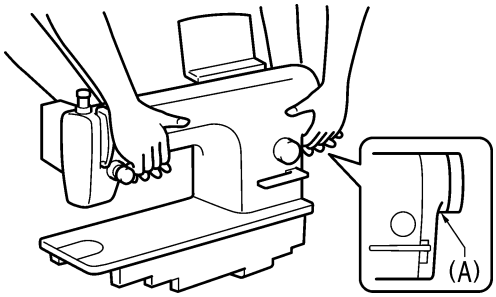

2087M

Tilting back the machine head

- Hold section (B) with your foot so that the table does not move, and then push the arm with both hands to tilt back the machine head.

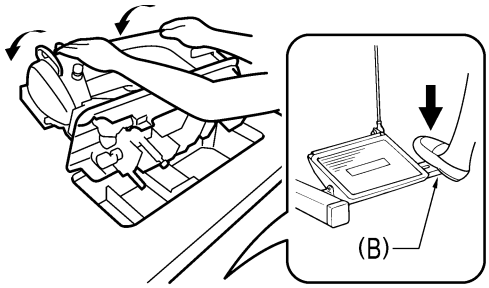

2088M

Returning the machine head to the upright position

1. Clear away any tools, etc. which may be near the table holes.
2. While holding the face plate with your left hand, gently return the machine head to the upright position with your right hand.

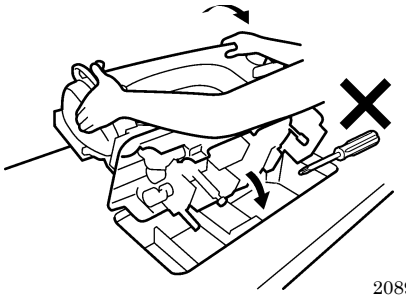

2089M

3-1. Table processing diagram

- The top of the table should be 40 mm in thickness and should be strong enough to hold the weight and with-stand the vibration of the sewing machine.
- Drill holes as indicated in the illustration below.

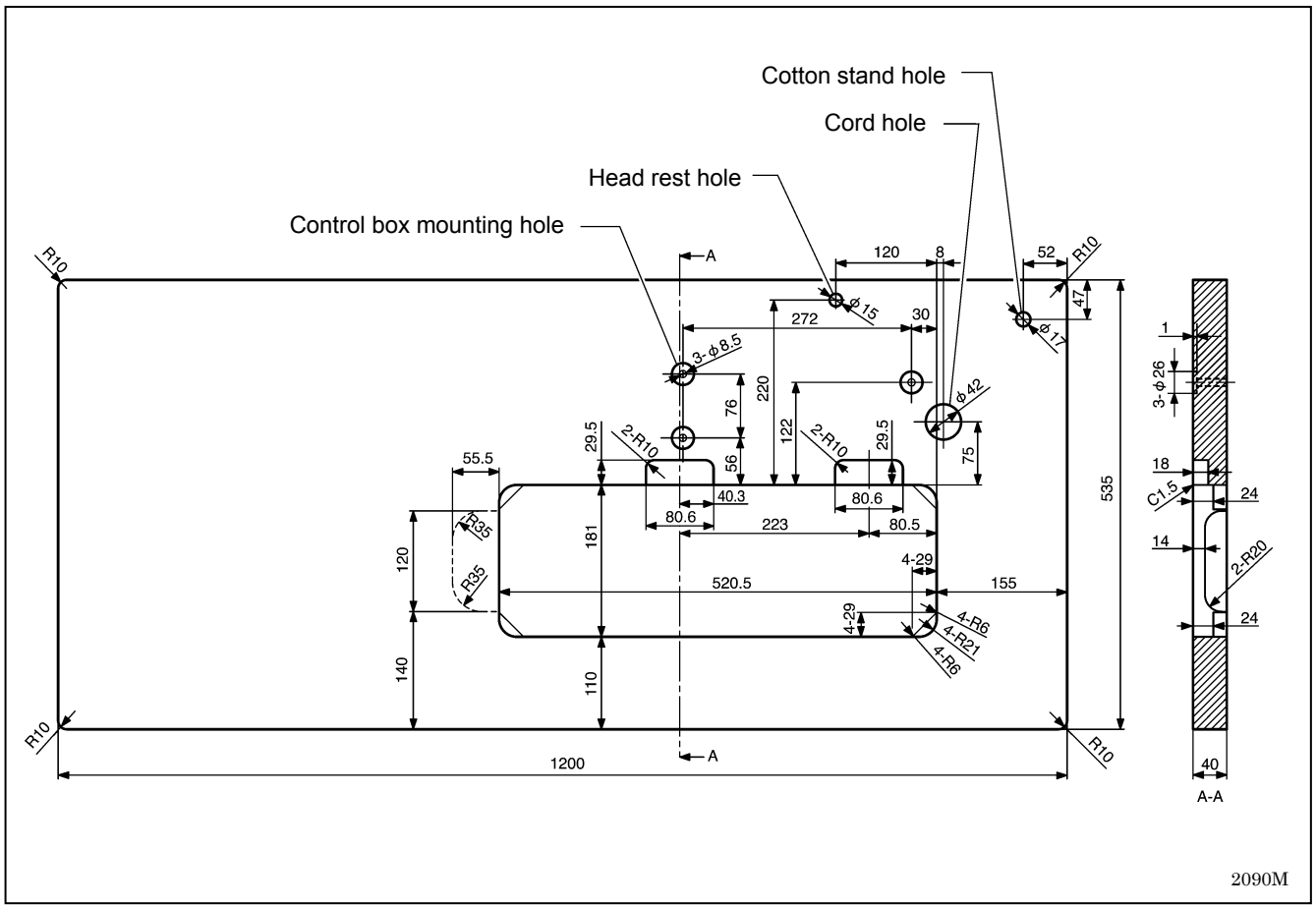

3-2. Installation

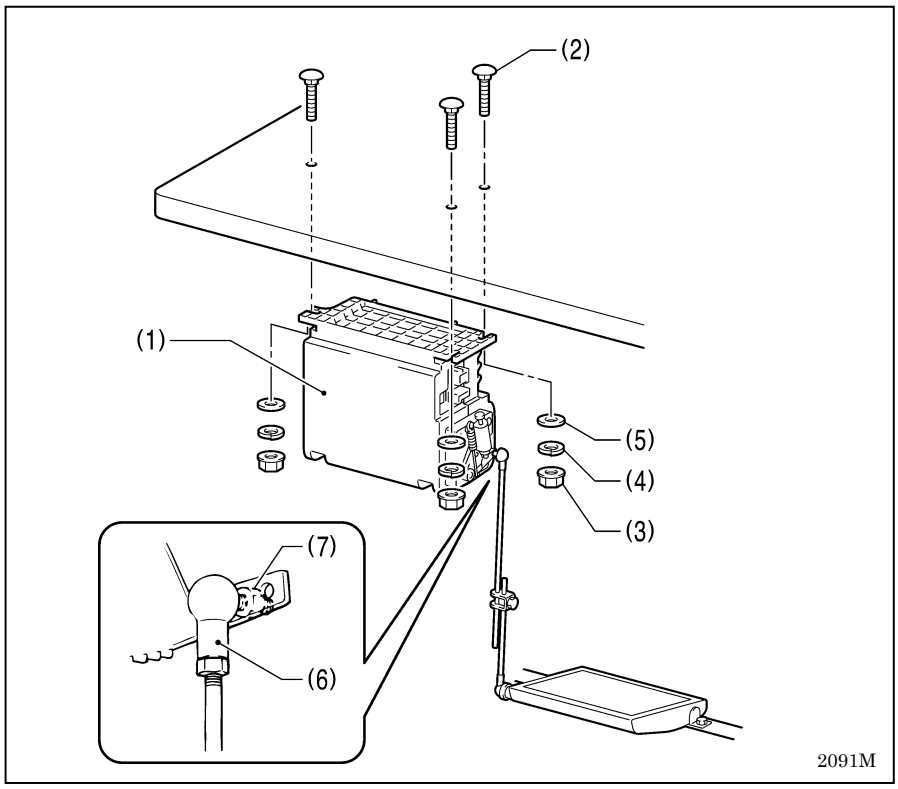

1. Control box

(1) Control box
(2) Bolts [3 pcs]
(3) Nuts [3 pcs]
(4) Spring washers [3 pcs]
(5) Washers [3 pcs]

2. Connecting rod

(6) Connecting rod
(7) Nut

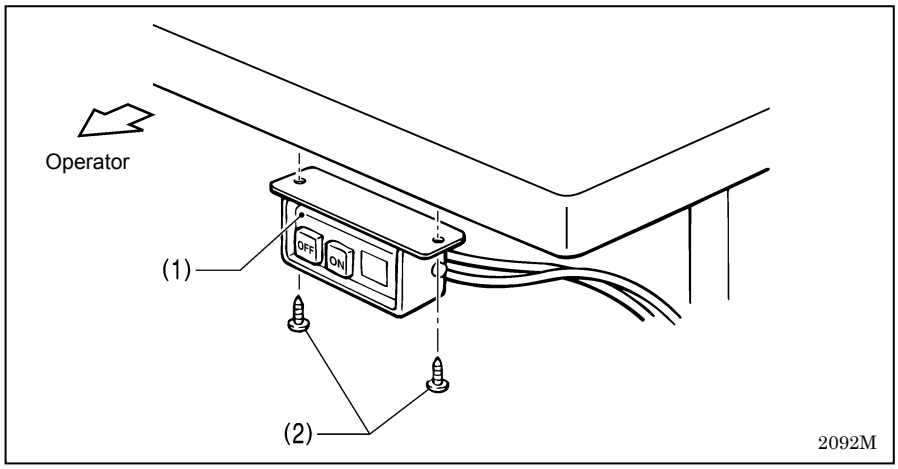

3. Power switch

(1) Power switch
(2) Screws [2 pcs]

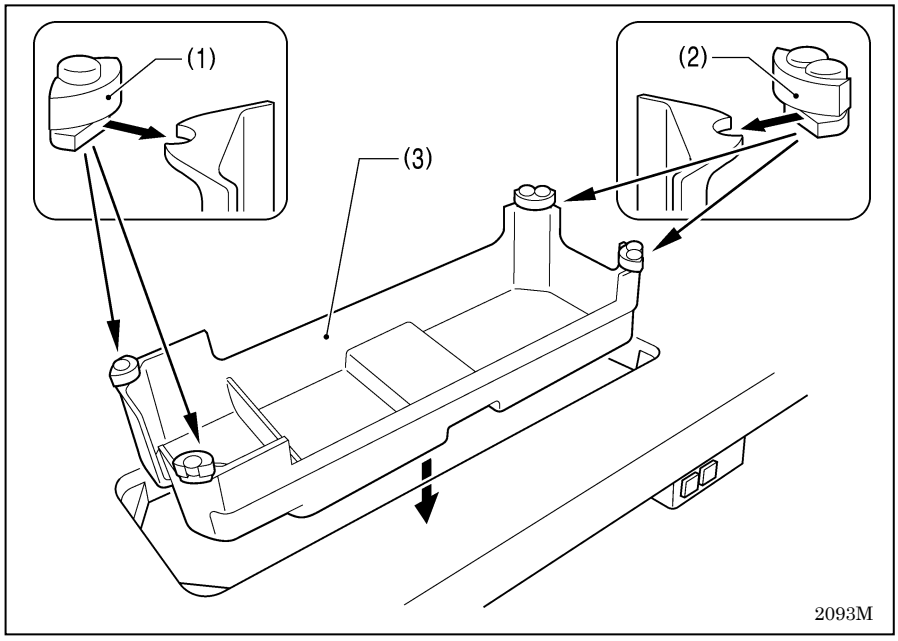

4. Oil pan

(1) Head cushions (left) [2 pcs]
(2) Head cushions (right) [2 pcs]
(3) Oil pan

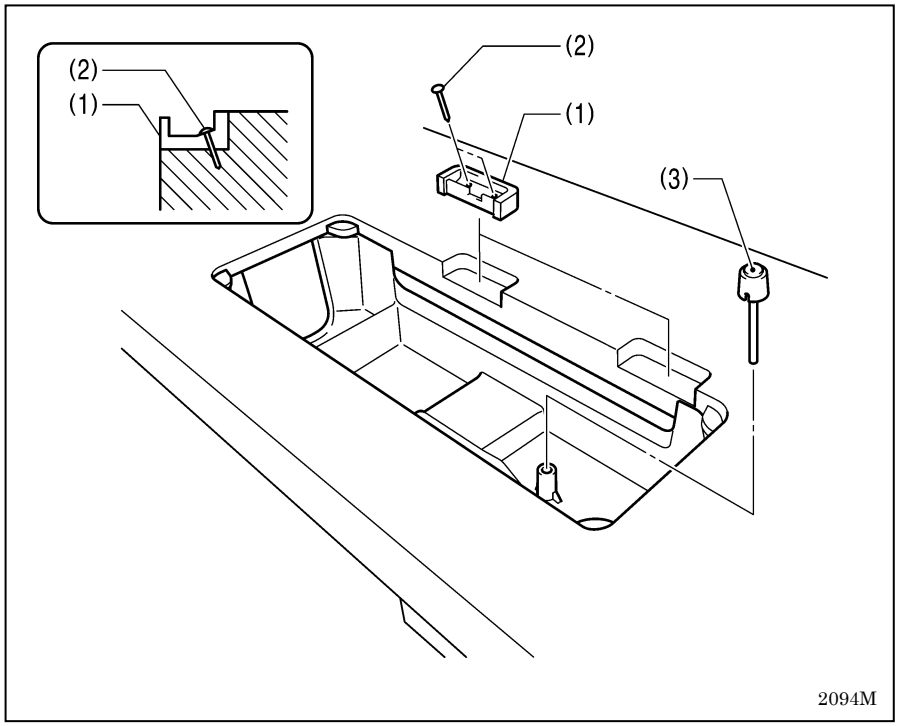

5. Rubber cushions

(1) Rubber cushions [2 pcs]
(2) Nails [4 pcs]

6. Knee lifter complying bar

(3) Knee lifter complying bar

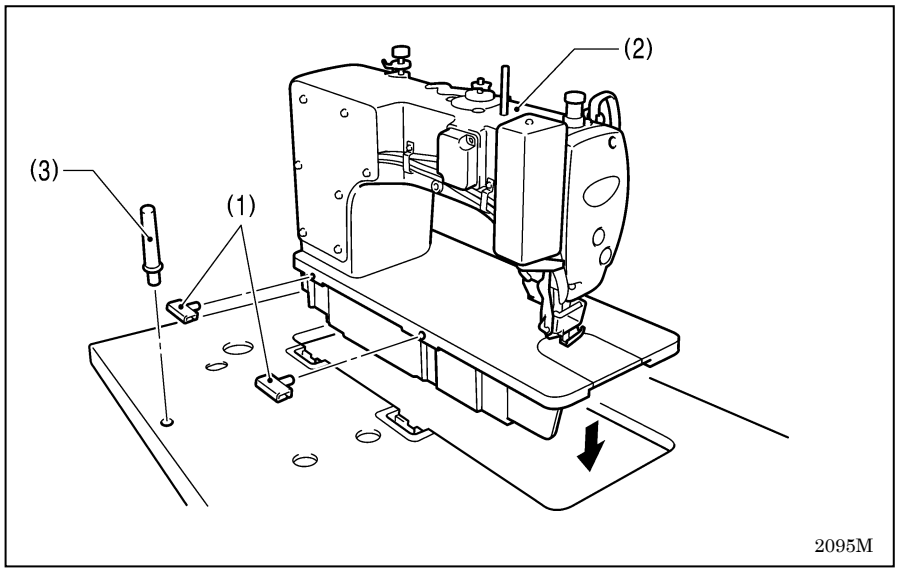

7. Machine head

(1) Hinges [2 pcs]
(2) Machine head
(3) Head rest

NOTE:
Tap the head rest (3) securely into the table hole. If the head rest (3) is not pushed in as far as it will go, the machine head will not be sufficiently stable when it is tilted back.

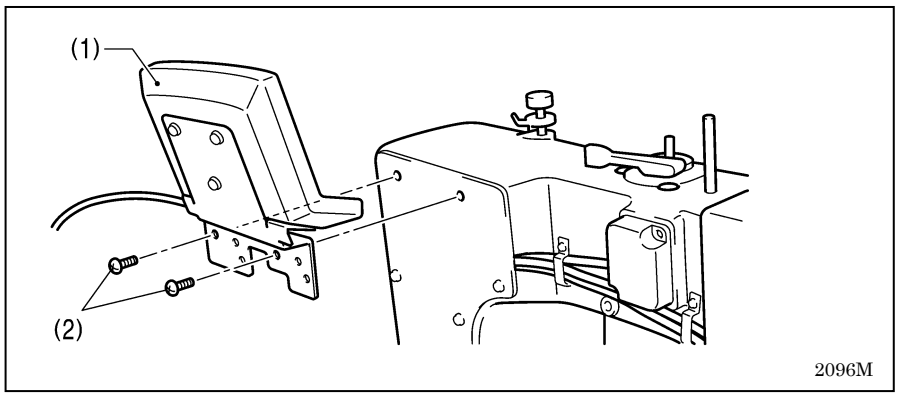

8. Operation panel

(1) Operation panel
(2) Screws [2 pcs]
(Use for tightening rear cover)

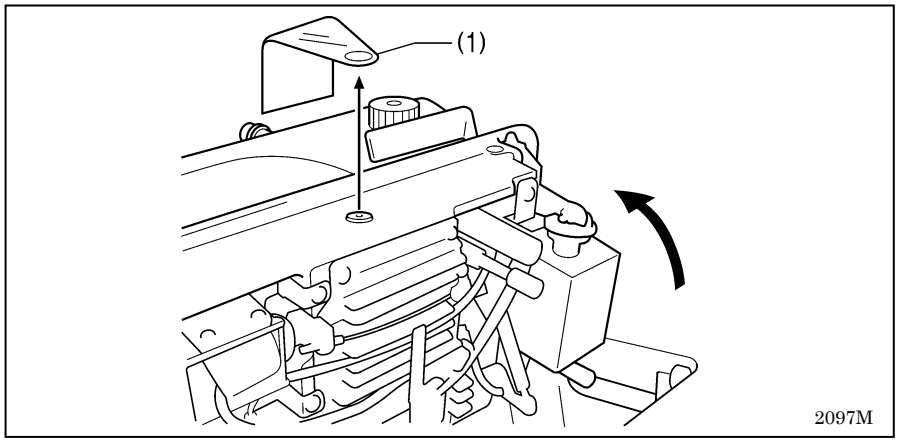

9. Sticker (Remove)

(1) Sticker

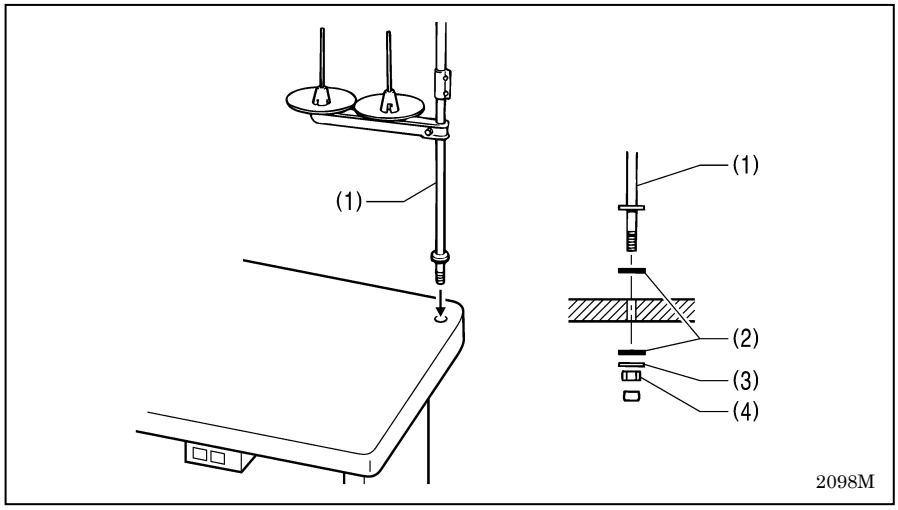

10. Cotton stand

(1) Cotton stand

NOTE:
Securely tighten the nut (4) so that the two rubber cushions (2) and the washer (3) are securely clamped and so that the cotton stand (1) does not move.

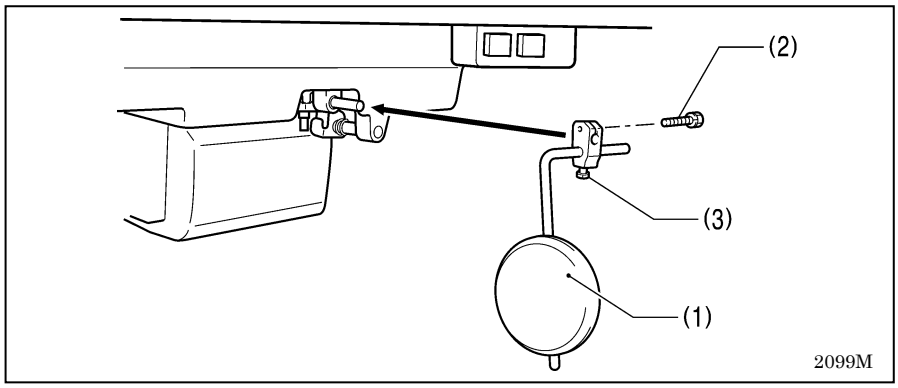

11. Knee lifter plate

(1) Knee lifter plate
(2) Bolt

* Loosen the bolt (3) and move the knee lifter plate (1) to a position where it is easy to use.

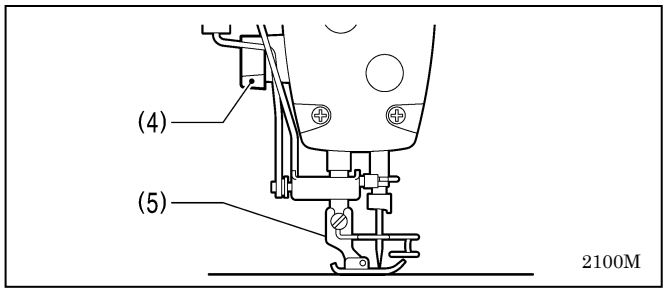

<Knee lifter adjustment>

1. Turn the machine pulley so that the feed dog is below the top of the needle plate.
2. Lower the presser foot (5) by using the lifting lever (4).

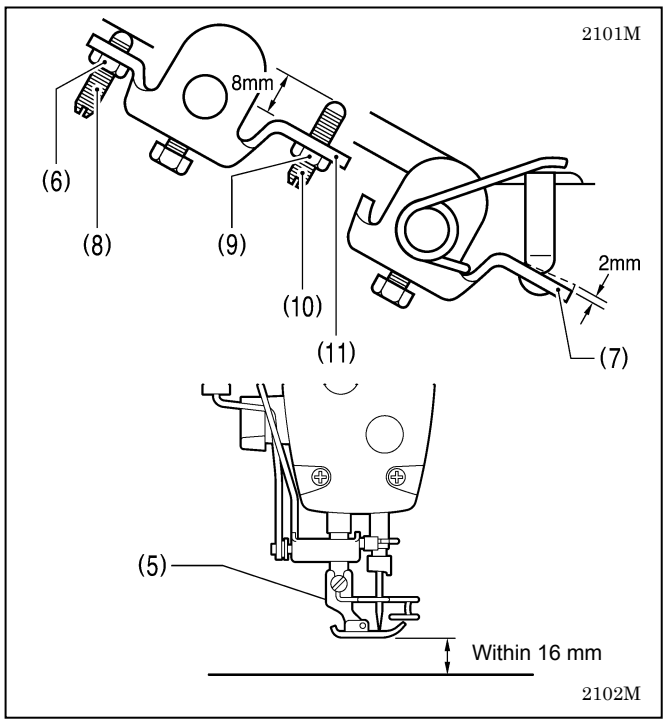

3. Loosen the nut (6).
4. Turn the screw (8) to adjust so that the amount of play in the knee lifter (7) is approximately 2 mm when the knee lifter plate (1) is gently pressed.
5. Securely tighten the nut (6).
6. Loosen the nut (9).
7. Turn the screw (10) until the distance between the end of the screw (10) and the knee lifter (11) is approximately 8 mm.
8. Turn the adjusting screw (10) to adjust so that the presser foot (5) is at the desired position within a distance of 16 mm of the needle plate when the knee liter plate (1) is fully pressed.
9. After adjustment is completed, securely tighten the nut (9).

3-3. Lubrication (-40[], 43[] specifications)

* If the sewing machine is -45[] specifications, it is a complete dry type machine, and so no lubrication is necessary.

⚠ CAUTION

- Do not connect the power cord until lubrication has been completed, otherwise the machine may operate if the treadle is depressed by mistake, which could result in injury.
- Be sure to wear protective goggles and gloves when handling the lubricating oil and grease, so that they do not get into your eyes or onto your skin, otherwise inflammation can result.
  Furthermore, do not drink the oil or eat the grease under any circumstances, as they can cause vomiting and diarrhea.
  Keep the oil out of the reach of children.

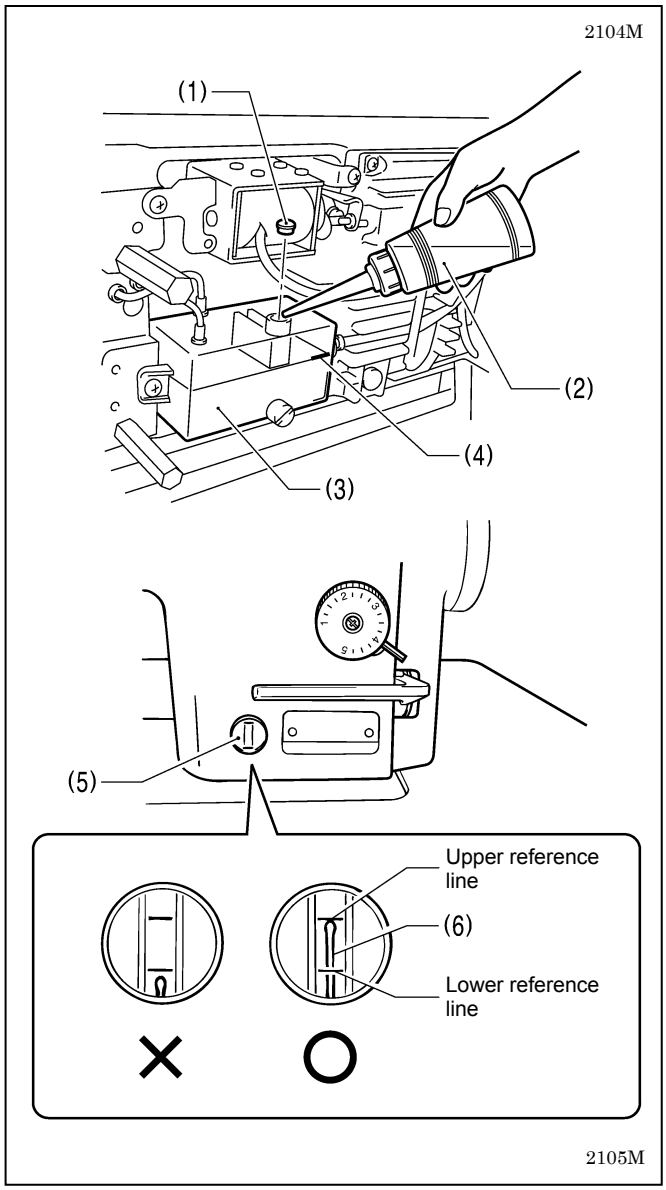

- The sewing machine should always be lubricated and the oil supply replenished before it is used for the first time, and also after long periods of non-use.
- Use only the lubricating oil (Nisseki Mitsubishi Sewing Lube 10N; VG10) specified by Brother.

1. Tilt back the machine head.
2. Remove the rubber cap (1), and pour 150 ml of lubricating oil from the accessory oil bottle (2) into the oil tank (3).
   (Use the reference line (4) as a guide when pouring.)
3. Replace the rubber cap (1).
4. Return the machine head to its original position.
5. Check that the oil gauge (6) comes to the upper reference line in the oil gauge window (5).

* Be sure to add more oil if the oil gauge (6) is below the lower reference line.

3-4. Connecting the cords

DANGER

Wait at least 5 minutes after turning off the power switch and disconnecting the power cord from the wall outlet before opening the face plate of the control box. Touching areas where high voltages are present can result in severe injury.

CAUTION

Contact your Brother dealer or a qualified electrician for any electrical work that may need to be done.

Do not connect the power cord until all cords have been connected.
The machine may operate if the treadle is depressed by mistake, which could result in injury.

Be sure to connect the ground. If the ground connection is not secure, you run a high risk of receiving a serious electric shock, and problems with correct operation may also occur.

3-4-1. Opening the control box cover

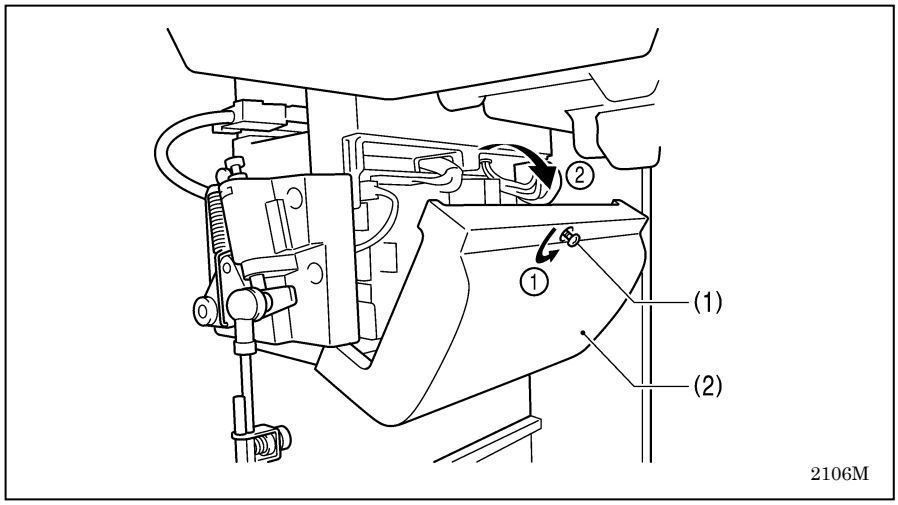

(1) Screw
(2) Cover

3-4-2. Connecting the cords

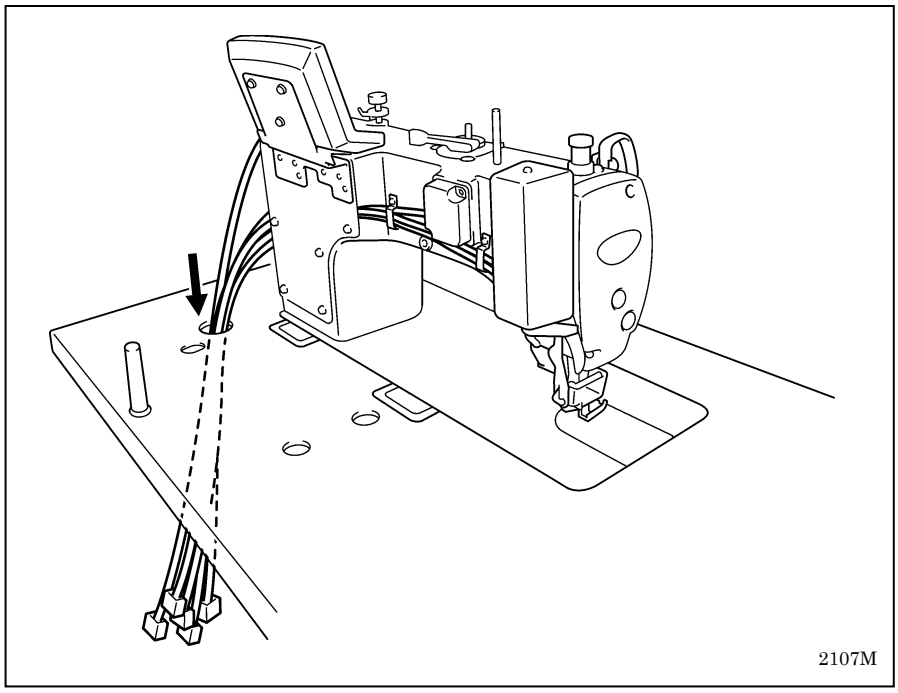

1. Sewing machine cords

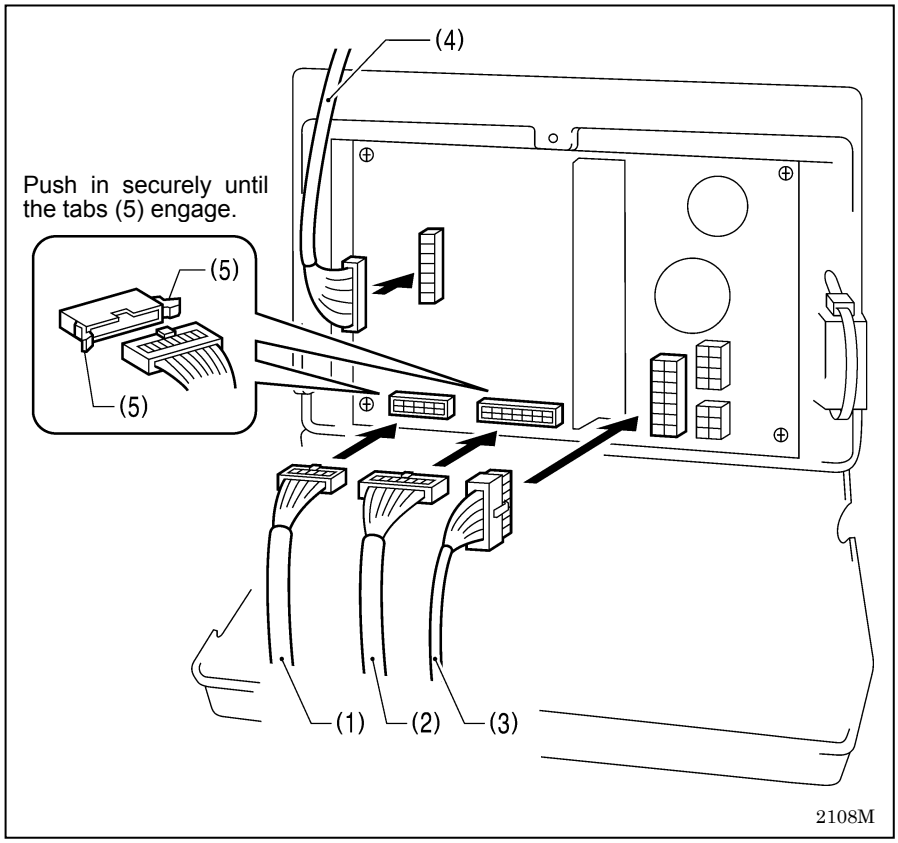

(1) 10-pin operating panel connector
(2) 14-pin encoder connector
(3) 14-pin machine connector
(4) 7-pin head detector unit connector

Refer to the following page for the 4-pin motor connector.

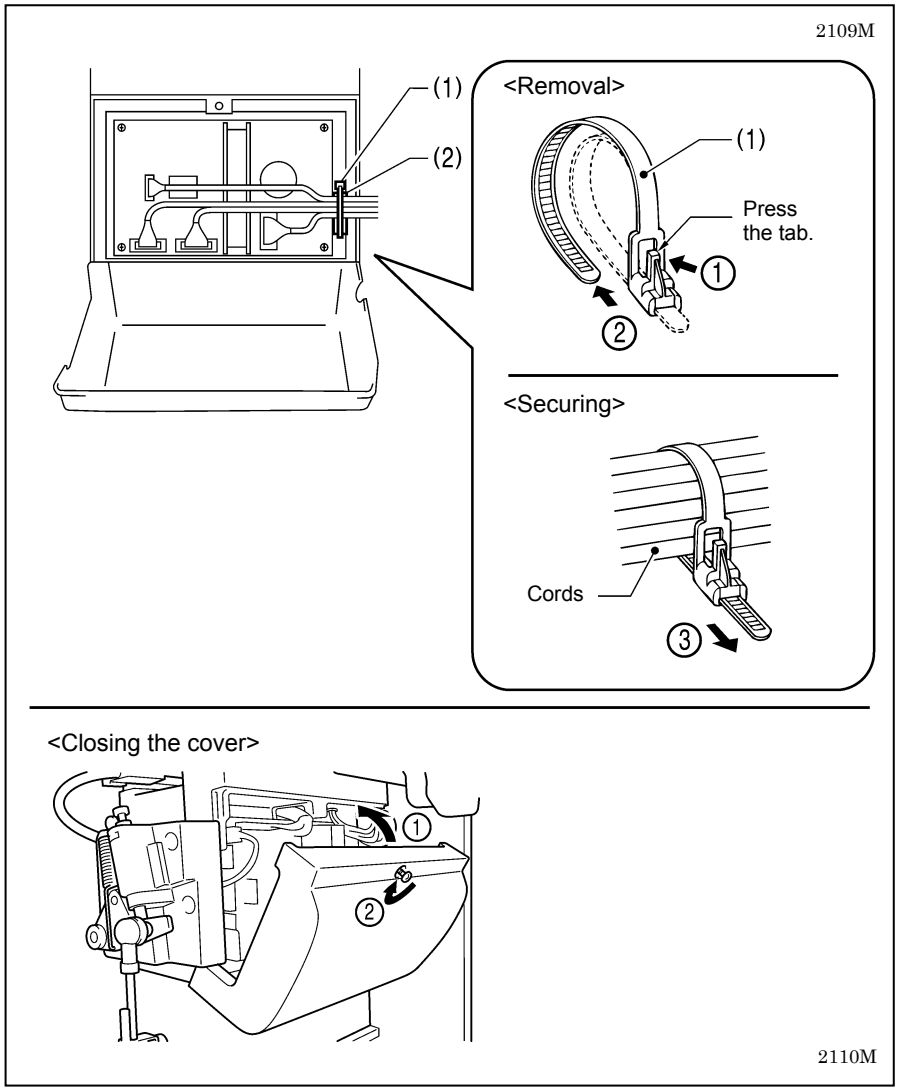

2. Repeat cable tie

(1) Repeat cable tie

NOTE:

- Bind the cords in such a way that the connector does not get pulled out.
- All cords that come out from the control box should be secured to the cord holder (2) using the repeat cable tie (1), otherwise vibration from the sewing machine may cause the cords to become disconnected, which can cause problems with the operation of the control box.

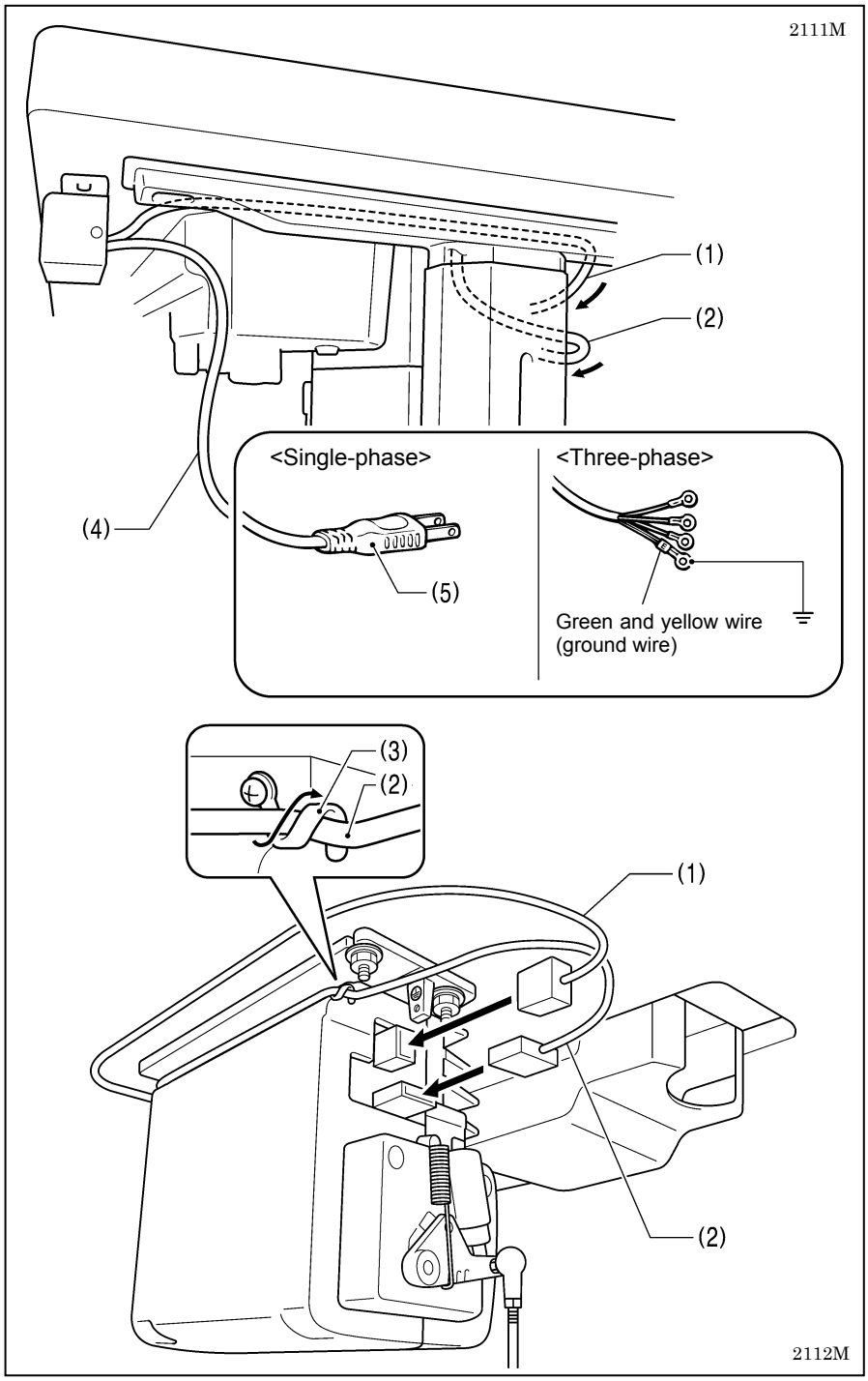

3. Other cords

(1) 6-pin power supply connector
(2) 4-pin motor connector
(3) Wire clip
(4) Power cord

<For single-phase specifications>
Insert the power cord plug (5) into a wall outlet.

<For three-phase specifications>
1. Attach an appropriate plug to the power cord (4). (The green and yellow wire is the ground wire.)
2. Insert the plug into a properly-grounded AC power supply.

NOTE:
Do not use extension cords, otherwise machine operation problems may result.

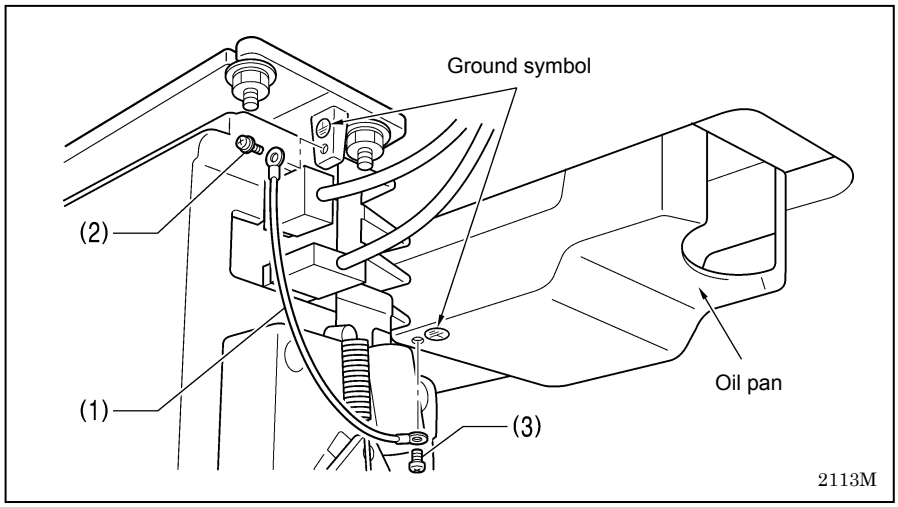

4. Ground wire

(1) Ground wire
(2) Screw [With washer]
(3) Screw

3-5. Test operation (Operating the treadle)

⚠ CAUTION

Do not touch any of the moving parts or press any objects against the machine while sewing, as this may result in personal injury or damage to the machine.

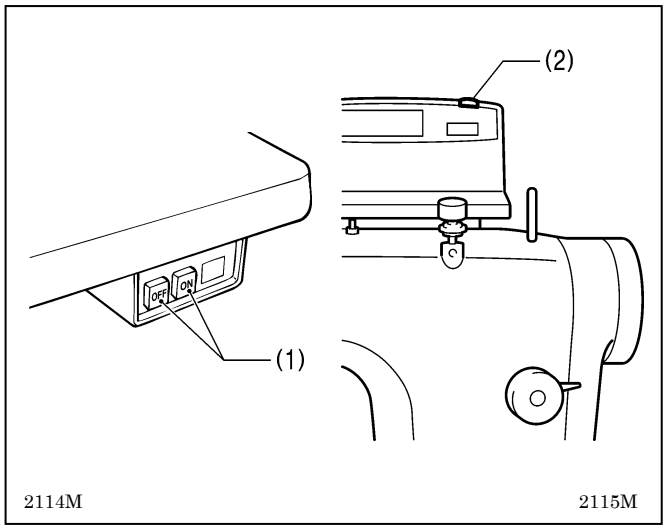

<Turning on the power>

Press the ON power switch (1).
The power indicator (2) will illuminate.

NOTE: When turning the power switch on for the first time

The treadle and the operation panel will not operate for approximately four seconds after the power switch is turned on.
After approximately four seconds, “iniT rPM” (initialization) will appear in the operation panel. After “iniT rPM” appears, treadle operation will then be possible. (The operation panel will change to the stitch number display.)
This message will not appear the second and subsequent times that the power switch is turned on.

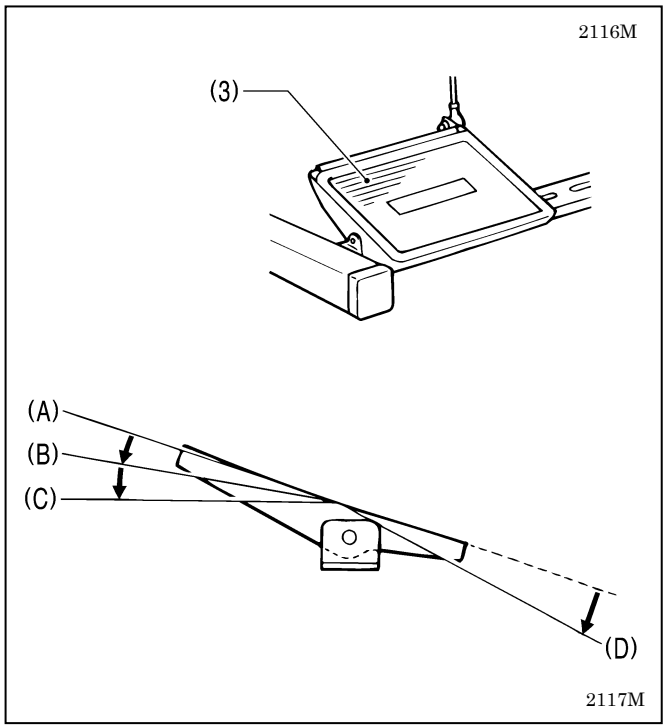

<Test operation>

1. Check that the machine sews at low speed when the treadle (3) is gently pressed to position (B).
2. Then check that it sews at high speed when the treadle (3) is gently pressed to position (C).
3. After pressing the treadle (3) forward, check that the needle is lowered to the top of the needle plate when the treadle (3) is returned to the neutral position (A). (when needle down stopping has been set.)
4. If the treadle (3) is pressed to position (D), thread trimming is carried out and the needle then rises above the needle plate and stops.

4. PREPARATION BEFORE SEWING

4-1. Installing the needle

⚠ CAUTION

Turn off the power switch before installing the needle.
The machine may operate if the treadle is depressed by mistake, which could result in injury.

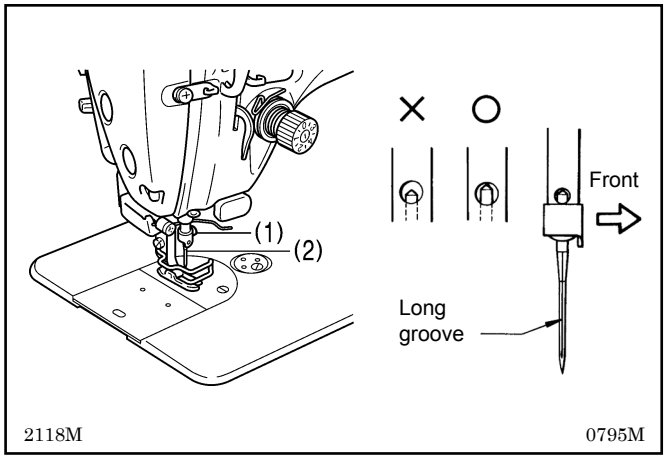

1. Turn the machine pulley to move the needle bar to its highest position.
2. Loosen the screw (1).
3. Insert the needle (2) in a straight line as far as it will go, making sure that the long groove on the needle is at the left, and then securely tighten the screw (1).

4-2. Removing the bobbin case

⚠ CAUTION

Turn off the power switch before removing the bobbin case.
The machine may operate if the treadle is depressed by mistake, which could result in injury.

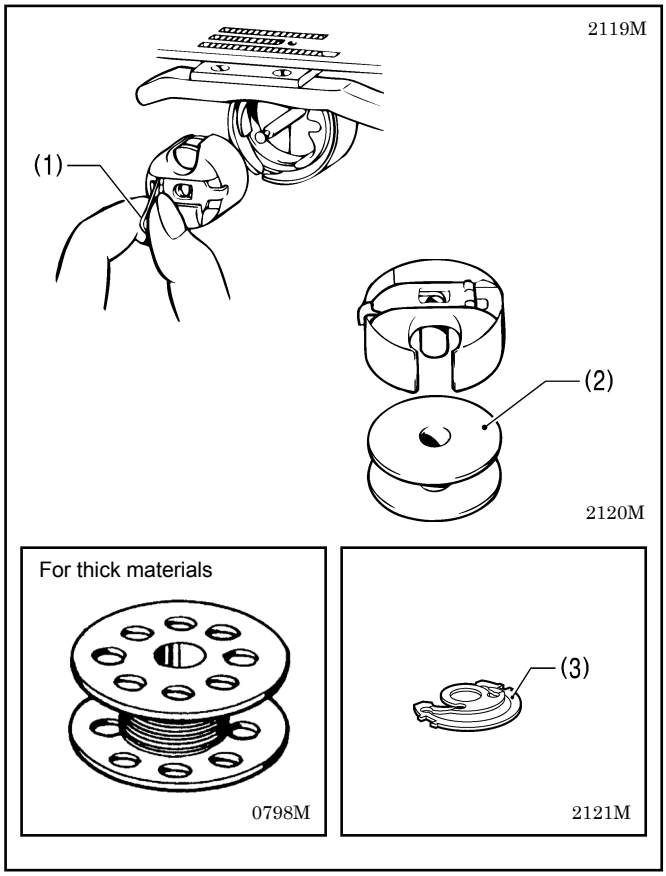

1. Turn the machine pulley to raise the needle until it is above the needle plate.
2. Pull the latch (1) of the bobbin case upward and then remove the bobbin case.
3. The bobbin (2) will come out when the latch (1) is released.

- There is an anti-spin spring (3) inside the bobbin case. The anti-spin spring (3) prevents the bobbin from racing at times such as during thread trimming.
- Use bobbins (2) made of light alloy as specified by BROTHER.

4-3. Winding the lower thread

⚠ CAUTION

Do not touch any of the moving parts or press any objects against the machine while winding the lower thread, as this may result in personal injury or damage to the machine.

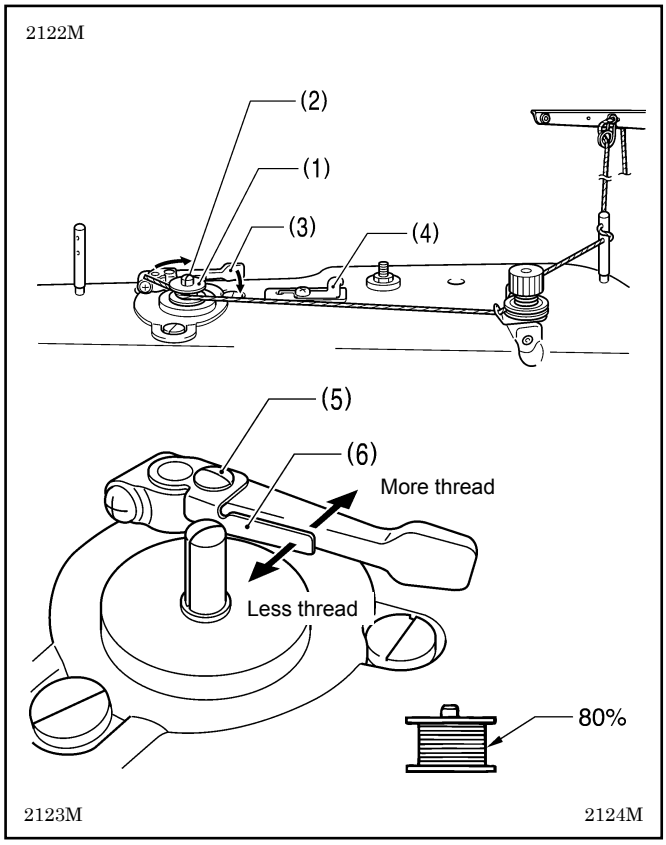

1. Turn on the power switch.
2. Place the bobbin (1) onto the bobbin winder shaft (2).
3. Wind the thread several times around the bobbin (1) in the direction indicated by the arrow.
4. Push the bobbin presser arm (3) toward the bobbin(1).
5. Raise the presser foot with the lifting lever.
6. Depress the treadle. Lower thread winding will then start.
7. Once winding of the lower thread is completed, the bobbin presser arm (3) will return automatically.
8. After the thread has been wound on, remove the bobbin and cut the thread with the knife (4).

* Loosen the screw (5) and move the bobbin presser (6) to adjust the amount of thread wound onto the bobbin.

NOTE:
The amount of thread wound onto the bobbin should be a maximum of 80 % of the bobbin capacity.

4-4. Installing the bobbin case

⚠ CAUTION

Turn off the power switch before installing the bobbin case.
The machine may operate if the treadle is depressed by mistake, which could result in injury.

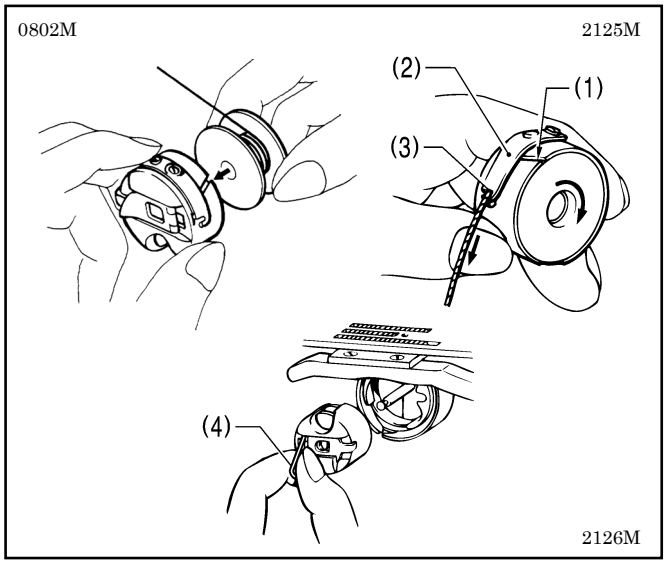

1. Turn the machine pulley to raise the needle until it is above the needle plate.
2. While holding the bobbin so that the thread winds to the right, insert the bobbin into the bobbin case.
3. Pass the thread through the slot (1) and under the tension spring (2), and then pull it out from the thread guide (3).
4. Check that the bobbin turns clockwise when the thread is pulled.
5. Hold the latch (4) on the bobbin case and insert the bobbin case into the rotary hook.

4-5. Threading the upper thread

⚠ CAUTION

Turn off the power switch before threading the upper thread.
The machine may operate if the treadle is depressed by mistake, which could result in injury.

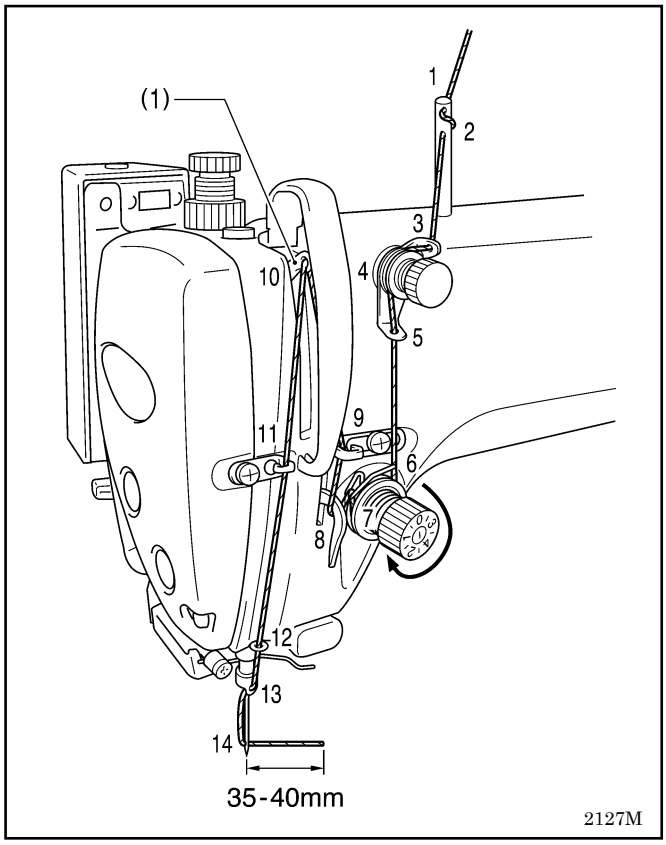

Turn the machine pulley and raise the thread take-up (1) before threading the upper thread.
This will make threading easier and it will prevent the thread from coming out at the sewing start.

4-6. Adjusting the stitch length

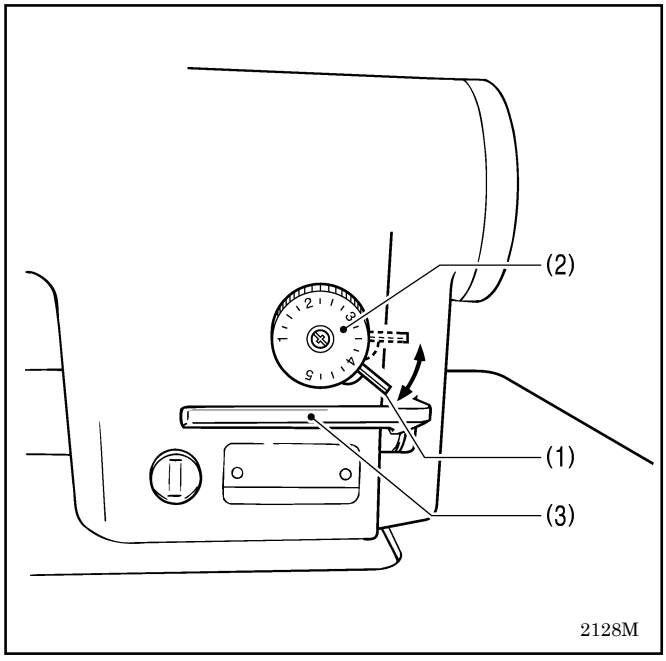

1. Push the dial lock lever (1) up until it clicks to release the lock.
2. Turn the stitch length dial (2) clockwise or counter-clockwise so that the desired stitch length is at the uppermost position on the dial.
   - The larger the number, the longer the stitch length will be.
     (The numbers on the dial are for use as a guide. The length of the finished stitches may vary depending on the type and thickness of material being sewn. Adjust while looking at the finished stitches.)
   - When turning the stitch length dial (2) from a larger setting to a smaller setting, it will be easier to turn the dial if the reverse lever (3) is pushed to the halfway-down position.
3. Push the dial lock lever (1) down firmly to lock it.

* Check that the stitch length dial (2) does not rotate.

4-7. Using the thread wiper

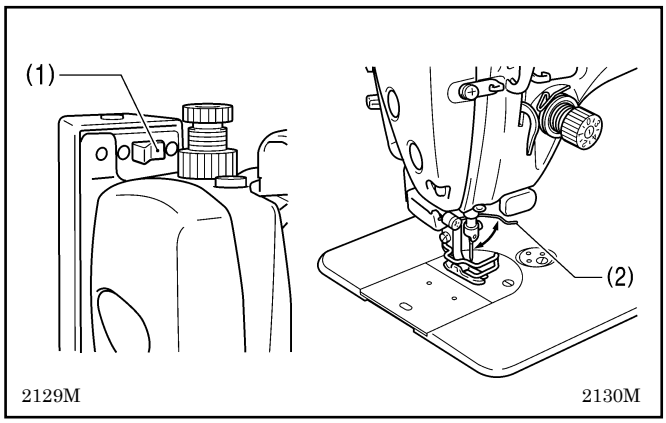

Press the thread wiper switch (1) to the ⊡ side. If this is done, the thread wiper (2) will operate after the thread is trimmed.

2209M

4-8. Using the knee lifter

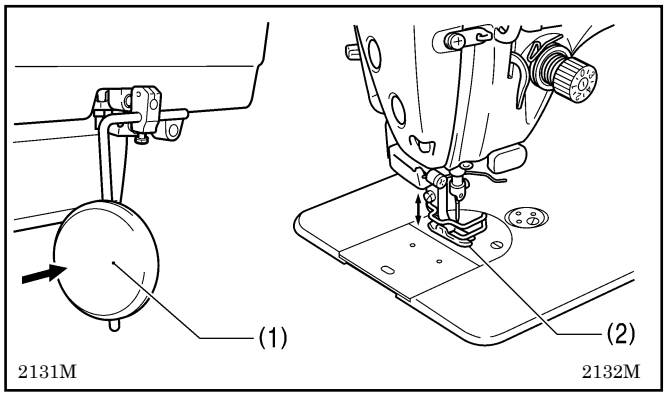

The presser foot (2) can be raised by pressing the knee lifter plate (1).

5. USING THE OPERATION PANEL (BASIC OPERATIONS)

5-1. Names and functions

- The operation panel keys cannot be operated while sewing is in progress.
  Select the keys and set the number of stitches before starting sewing.
- In the case of keys with indicators, the indicator illuminates when that function is operating, and the indicator switches off when the key is pressed once more.

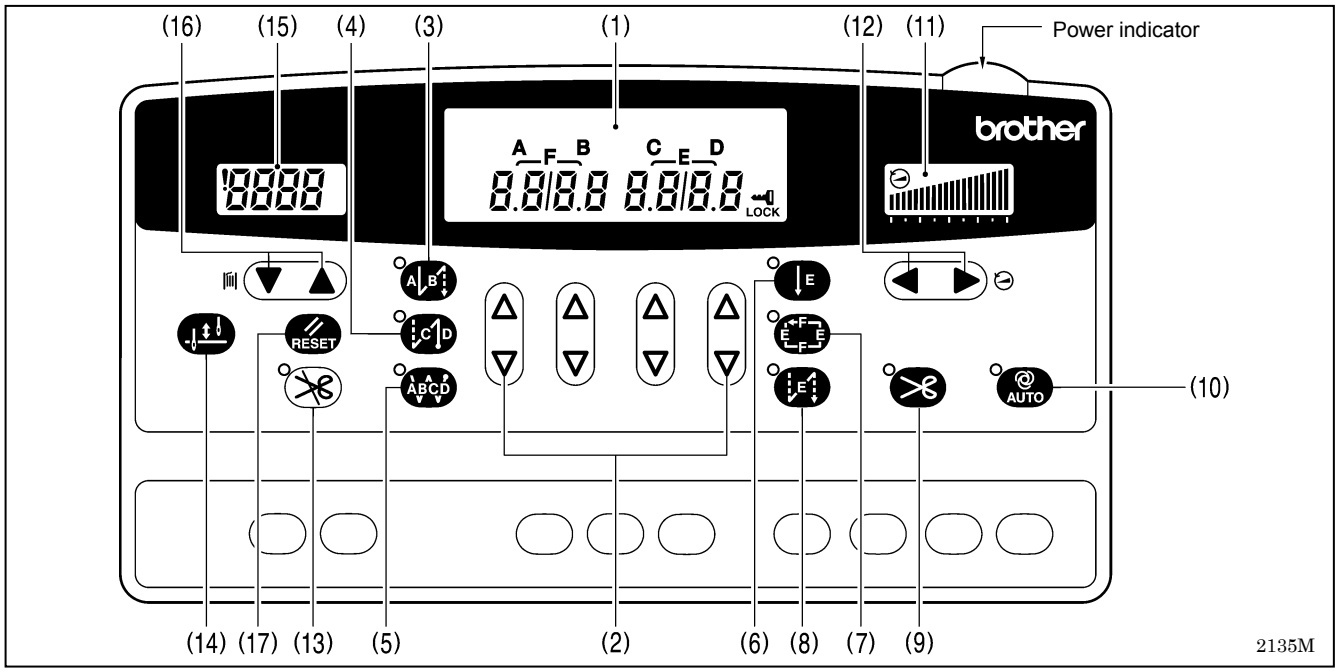

The power indicator illuminates when the power is turned on.

(1) Main display

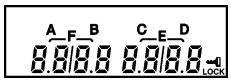

- In start backtack display, AB illuminates and the number of stitches for A and B are displayed.
- In end backtack display, CD illuminates and the number of stitches for C and D are displayed.
- In continuous backtack display, ABCD illuminates and the number of stitches for A, B, C and D are displayed.
- In fixed stitch display, E or F illuminates and the number of stitches for E or F are displayed.

2136M

(2) Setting keys

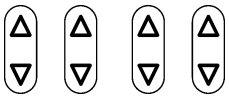

These keys are used to set the number of backtack stitches for A, B, C and D and the number of fixed stitches for E and F.

- When the △ key is pressed, the setting increases from 0 up to 99.
- When the ▽ key is pressed, the setting decreases from 99 down to 0.

2137M 2138M 2139M

(3) Start backtack key

When this key is pressed so that the indicator illuminates, the number of start backtack stitches (0−99) in the A and B stitch number displays is sewn.

2140M

(4) End backtack key

When this key is pressed so that the indicator illuminates, the number of end backtack stitches (0−99) in the C and D stitch number displays is sewn. When the treadle is depressed backward, the end backtack stitches are sewn and then the thread is trimmed automatically.
The number of stitches can be changed or deleted before the treadle is depressed backward.

2141M

(5) Continuous backtack key

When this key is pressed so that the indicator illuminates, the number of backtack stitches (0−99) in the A, B, C and D stitch number displays is sewn continuously. After the sewing machine sews a full cycle of stitches set by A, B, C and D, the thread is trimmed automatically.

2142M

(6) Fixed stitch key

When this key is pressed so that the indicator illuminates, the number of stitches (1−1999) in the E stitch number display is sewn, and then the sewing machine stops automatically.

2143M

(7) Name label key

When this key is pressed so that the indicator illuminates, fixed stitch sewing of the number of stitches (1−1999) in the E and F stitch number displays is carried out repeatedly.

2144M

(8) Pleat presser sewing key

When this key is pressed so that the indicator illuminates, the number of backtack stitches (1−1999) in the E stitch number display can be sewn by pressing the actuator.

2145M

(9) Thread trimming key

- This can only be set for use together with the fixed stitch key (6) or the name label key (7).
- When this key is pressed so that the indicator illuminates, the set number of stitches (start or end backtack stitches or fixed stitches) are sewn, and then the thread is trimmed automatically.

2146M

(10) AUTO key

- This can only be set for use together with the continuous backtack key (5), the fixed stitch key (6) or the name label key (7).
- When this key is pressed so that the indicator illuminates, the set number of stitches (start or end backtack stitches, fixed stitches or thread trimming) are sewn automatically simply by depressing the treadle once.

2147M

(11) Sewing speed control display

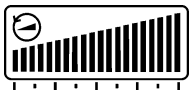

This shows the sewing speed when the treadle is depressed to the maximum amount.

- If all bars are illuminated, it indicates that the maximum speed can be set.
- If all bars are switched off, it indicates the minimum speed (220 rpm).

2148M

(12) Sewing speed control keys

These keys let you adjust the sewing speed that is used when the treadle is depressed to the maximum amount.
The sewing speed can also be adjusted while sewing is in progress.

- When the ▶ key is pressed, the sewing speed becomes faster.
- When the ◀ key is pressed, the sewing speed becomes slower.

2149M 2150M 2151M

(13) Thread trimming lock key

- When this key is pressed so that the indicator illuminates, the sewing machine stops in the needle up position without thread trimming being carried out even if the treadle is depressed backward.
- If the indicator of the thread trimming key (9) is illuminated, the sewing machine stops in the needle up position without thread trimming being carried out after the set number of stitches have been sewn.

2152M

(14) Half stitch key

When the sewing machine is stopped, the needle bar can be moved up and down by pressing this key.

2153M

(15) Lower thread counter display

This shows the lower thread counter value.
The counter is reduced by “1” for every ten stitches sewn.

2154M

(16) Lower thread counter keys

These keys are used to set the initial value for the lower thread counter. (Refer to p.23.)

2155M

(17) RESET key

This key is used to return the lower thread counter to its initial value and to cancel warning conditions. (Refer to p.23.)

2156M

5-2. Sewing start and end backtack stitches

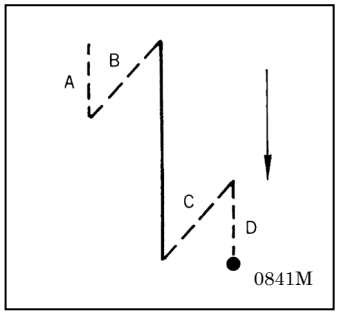

1 Setting start backtack stitches

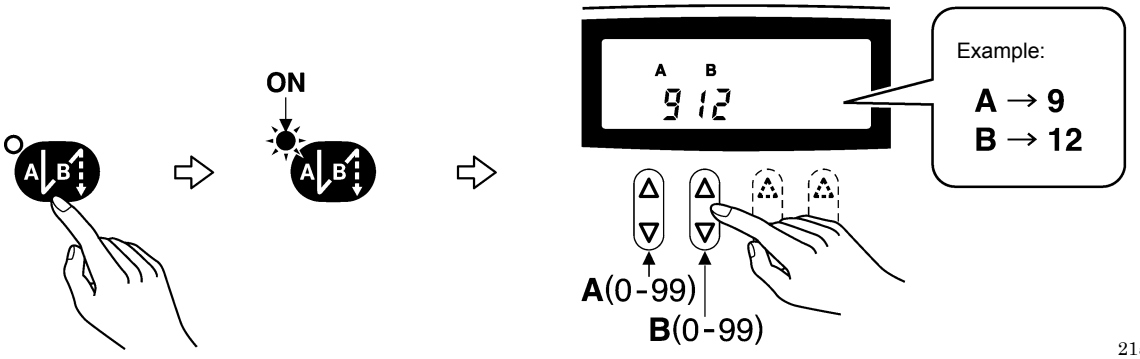

2157M

2 Setting end backtack stitches

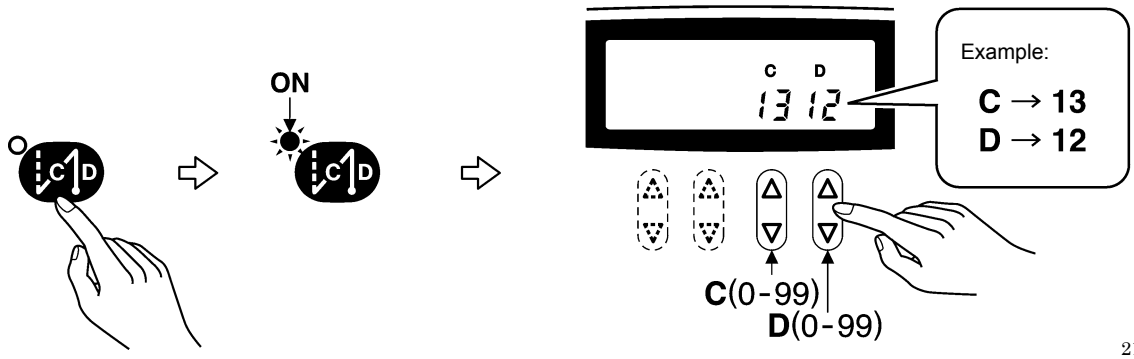

2158M

3

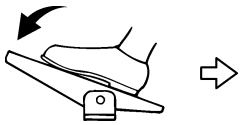

Start backtacking is carried out. After it has finished, normal sewing continues for as long as the treadle remains depressed.

NOTE:

If the treadle is returned to the neutral position, the sewing machine will continue operating until the set number of start backtack stitches has been sewn.

2159M

4

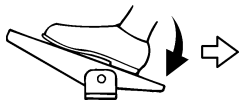

End backtacking is carried out. After it has finished, the thread is trimmed automatically and the sewing machine stops in the needle up position.

NOTE:

- If the treadle is depressed backward before sewing of the set number of start backtack stitches is complete, end backtacking will not be carried out.
- If the indicator of the thread trimming lock key is illuminated, the sewing machine will stop in the needle up position without thread trimming being carried out.

2160M

5-3. Sewing fixed stitches

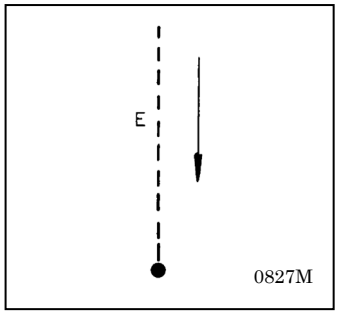

1

2161M

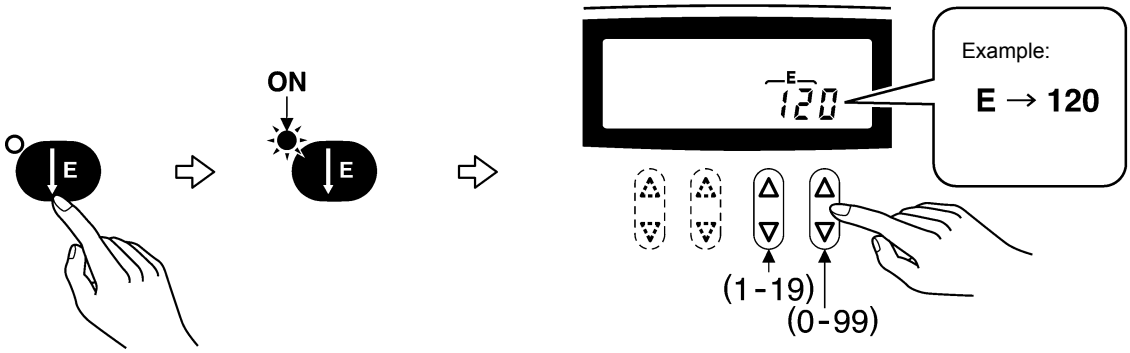

From 1 to 1999 stitches can be set.

2

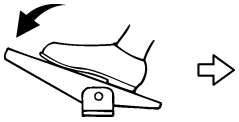

After the set number of stitches in E (fixed stitches) have been sewn, the sewing machine stops in the needle position that has been set by the needle up/down key (refer to p.24). After this, normal sewing is carried out if the treadle is depressed.

2159M

3

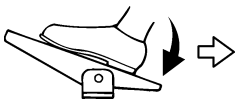

After the thread is trimmed, fixed stitch sewing mode is enabled.

2160M

<Automatic thread trimming>

Press the thread trimming key to turn on the thread trimming function. When the treadle is continuously depressed, thread trimming is carried out after the fixed stitches have been sewn.

<Automatic sewing>

When the AUTO key is pressed to turn on the automatic sewing function, the fixed stitches are sewn simply by depressing the treadle once without needing to depress it continuously.

<Start and end backtack sewing>

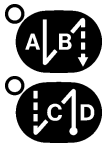

- The start backtack key and end backtack key can be pressed to turn on the backtack sewing function.
- If changing the number of end backtack stitches in C and D, press the fixed stitch key to temporarily turn off the fixed stitch function before making the change. (The CD display will show the number of stitches and the setting can then be changed.)

5-4. Sewing name labels

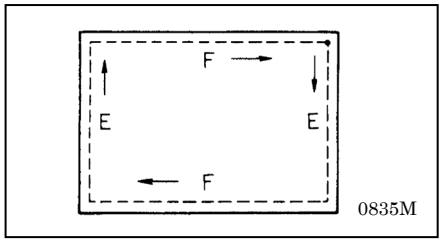

1	2162M ON Example: E → 12 F → 24 (1-19) (1-19) (0-99) (0-99) From 1 to 1999 stitches can be set for the E and F stitch numbers.
2	After the set number of stitches in E (fixed stitches) have been sewn, the needle bar stops in the position that has been set by the needle up/down key (refer to p.24). 2159M
3	After the set number of stitches in F (fixed stitches) have been sewn, the needle bar stops in the position that has been set by the needle up/down key (refer to p.24).
4	Repeat steps 2 and 3 above.
5	Thread trimming is carried out. 2160M

<If using a solenoid-type presser lifter>

After the fixed stitches in E and F are sewn, the presser foot is also lifted automatically.

<Automatic thread trimming>

Press the thread trimming key to turn on the thread trimming function. Thread trimming is carried out automatically after the second set of F stitches has been sewn.

<Automatic sewing>

When the AUTO key is pressed to turn on the automatic sewing function, the fixed stitches in E and F are sewn respectively simply by depressing the treadle once without needing to depress it continuously.

<Start and end backtack sewing>

- The start backtack key and end backtack key can be pressed to turn on the backtack sewing function.
- If changing the number of start and end backtack stitches in A, B, C and D, press the name label stitch key to turn off the name label function before making the change. (The ABCD display will show the number of stitches and the settings can then be changed.)

5-5. Sewing pleat presser stitches

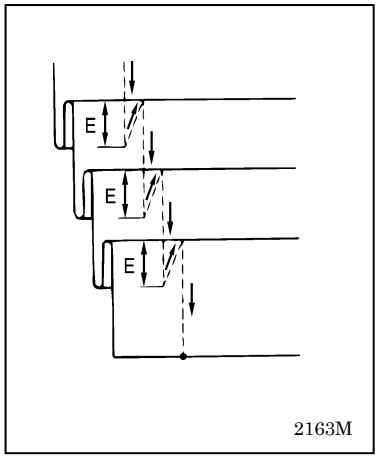

1

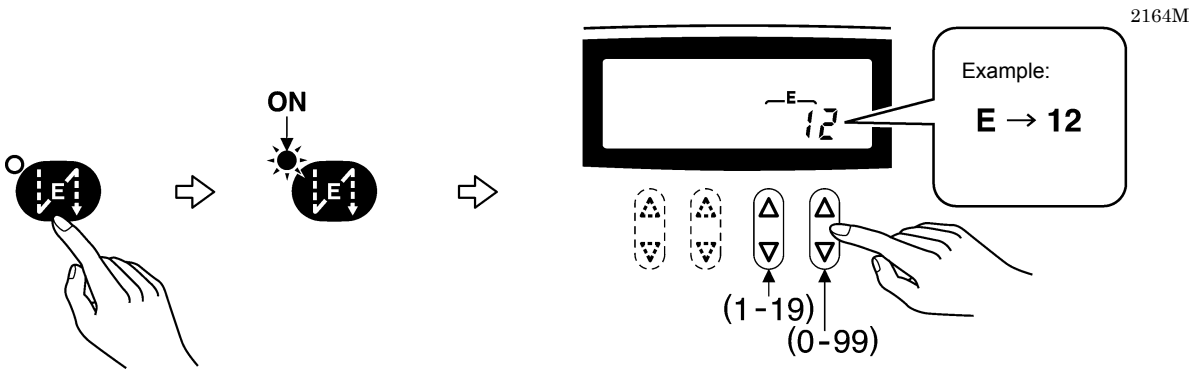

From 1 to 1999 stitches can be set.

2

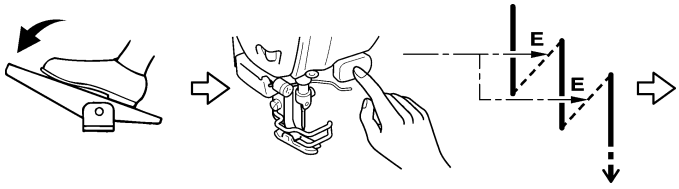

If the treadle is continuously depressed and then you press the actuator while sewing is in progress, the number of backtack stitches set in E is sewn and then normal sewing resumes.

2165M

3

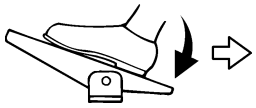

Thread trimming is carried out.

2160M

<Automatic sewing and automatic thread trimming>

These functions cannot be used.

<Start and end backtack sewing>

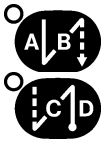

- The start backtack key and end backtack key can be pressed to turn on the backtack sewing function.
- If changing the number of end backtack stitches indicated in C and D, press the pleat presser sewing key to turn off the pleat presser sewing function before making the change. (The CD display will show the number of stitches and the setting can then be changed.)

5-6. Using the lower thread counter

- The lower thread counter can be used to let you know approximately how much lower thread is remaining.
- The value displayed by the lower thread counter display is reduced by 1 from the initial setting value each time the sewing machine sews 10 stitches, and a warning is given when the counter reaches “-5”.

<Initial value setting>

1

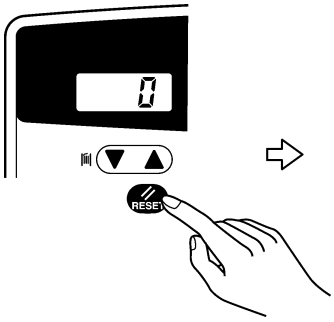

(Press for 2 seconds or more)

After about 2 seconds, the buzzer will sound and the lower thread counter display will show the initial value which was set previously.

2166M

2

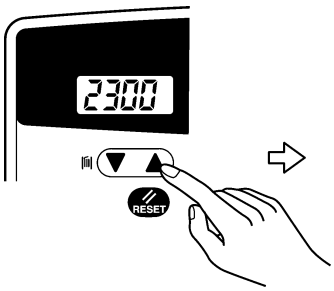

- When the ▲ key is pressed, the setting increases.
- When the ▼ key is pressed, the setting decreases.
- If you hold down the keys, the setting will change more quickly.
- If a value of “0” is set, the lower thread counter will not operate.
- The initial setting value will be accepted when sewing starts.

2167M 2168M 2169M

<Lower thread counter operation>

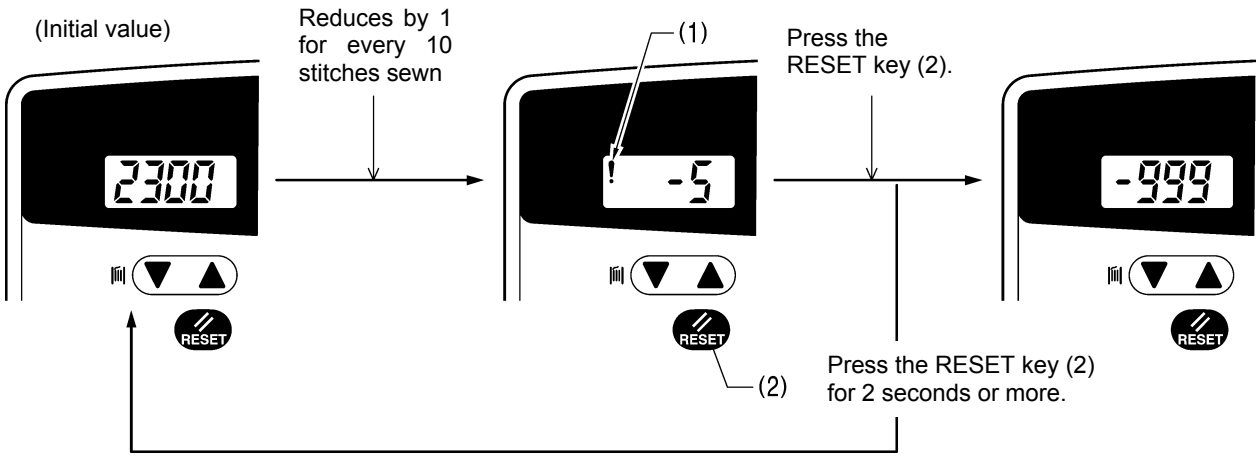

2170M

1. When sewing is carried out, the value shown in the lower thread counter display is reduced by 1 for every 10 stitches sewn. (After the value reaches zero “0”, a minus sign appears and counting continues to a maximum of “-999”.)
2. When the value is “-5” or less, a warning icon (1) illuminates and an electronic buzzer sounds for 5 seconds.
3. After the treadle returns to the neutral position and the sewing machine stops, the sewing machine will not start up again even if the treadle is depressed. However, thread trimming can be carried out by depressing the treadle backward.

- If you press the RESET key (2), the warning icon (1) will disappear and sewing will be possible when the treadle is depressed.
- If you press and hold the RESET key (2) for 2 seconds or more, the display will return to the initial value.

6. USING THE OPERATION PANEL (ADVANCED OPERATIONS)

The operations described in this section should only be carried out by a technician.

6-1. Names and functions

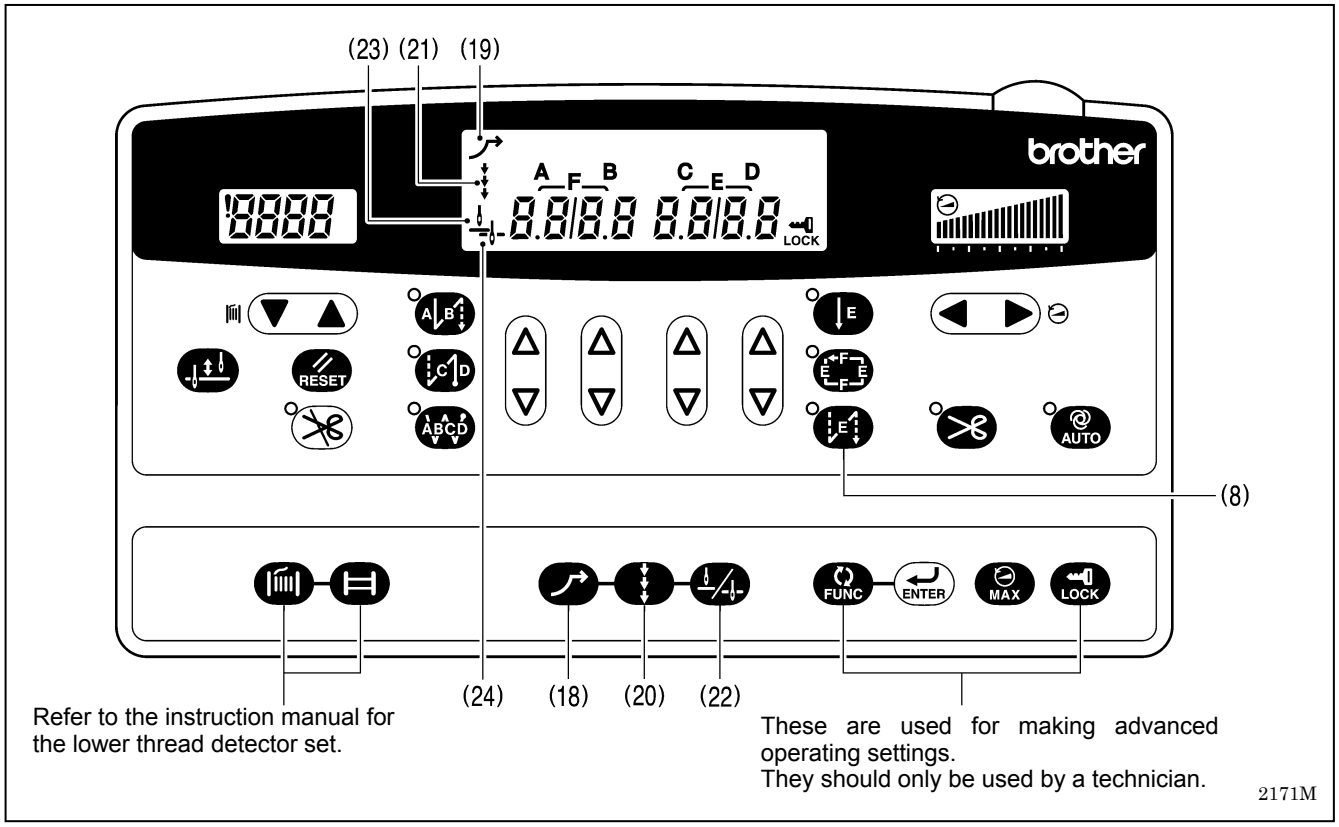

(18) Slow start key

- When this key is pressed so that the slow start icon (19) illuminates, the first two stitches sewn after the thread is trimmed are sewn at slow speed (220 rpm). After this, the sewing speed corresponds to the treadle depression amount.
- If you press this key again while the icon (19) is illuminated, the icon (19) will turn off.

2172M

(20) Correction key

- When this key is pressed so that the correction icon (21) illuminates, correction sewing (220 rpm) can be carried out.
  When the machine is stopped, stitches can be sewn one at a time by pressing the actuator.
  NOTE:
  - If you press the actuator while sewing is in progress, backtack stitches will be sewn.
  - Correction sewing cannot be carried out while the indicator of the pleat presser sewing key (8) is illuminated.
- If you press this key again while the icon (21) is illuminated, the icon (21) will turn off.

2173M

(22) Needle up/down key

Use this key to select whether the needle bar stops in the up position or the down position when the treadle is returned to the neutral position and sewing stops.

- When the needle up icon (23) is illuminated, the needle bar stops in the up position.
- When the needle down icon (24) is illuminated, the needle bar stops in the down position.

2207M 2208M 2174M

6-2. Adjusting the needle up stop position

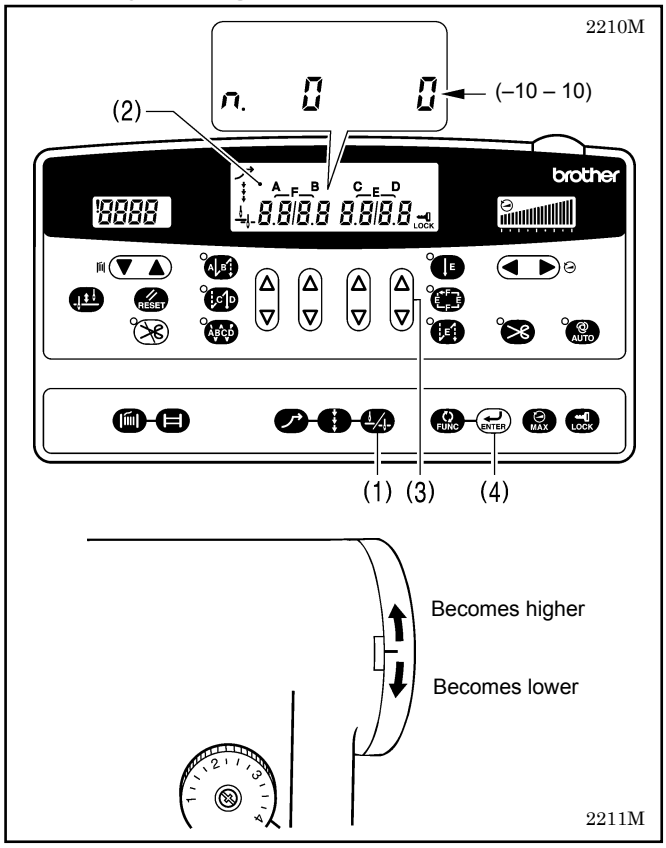

1. While pressing the needle up/down key (1), turn on the power switch.
2. “n.0 xx” will appear in the main display (2).
   (“xx” is the setting value for the needle up stop position, and “0” is the default setting.)
3. Press the rightmost △ or ▽ key (3) to change the setting value for the needle up stop position.
   - If you press the △ key, the setting value will increase up to 10 and the needle up stop position will become lower.
   - If you press the ▽ key, the setting value will decrease down to -10 and the needle up stop position will become higher.
4. Press the ENTER key (4) for two seconds or more.
   A long buzzer will sound and the main display (2) will change to stitch number display mode. (This completes the needle up stop position setting.)

* A setting value of “10” corresponds to an angle of rotation of approximately 10° for the upper shaft (5).

2138M 2139M

6-3. LOCK key

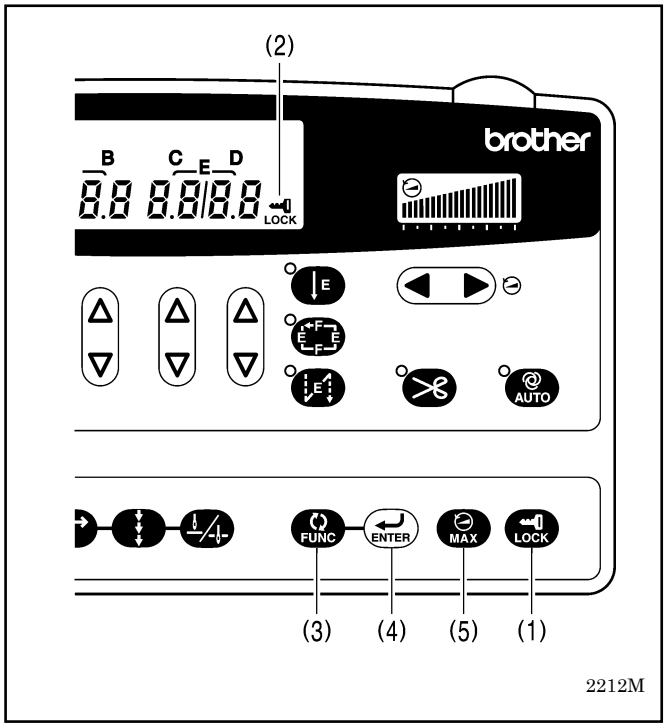

At the time of shipment from the factory, the LOCK key (1) is set to ON. (The icon (2) is illuminated.)
In this state, the following three key operations are invalid so that setting values cannot be changed accidentally.

FUNC key (3)
This key is used to make settings for various functions.

ENTER key (4)
This key is used to accept function settings.

MAX key (5)
This key is used to change the maximum sewing speed.

* Refer to the Service Manual for details on using these keys.

6-4. Resetting all settings to their defaults

While holding down the RESET key, turn on the power switch.
If you press the ENTER key, the settings will then be reset.
Once the settings have been reset, “iniT ALL” appears in the display and the operation panel settings are reset to their factory default settings.
Once the above display appears, normal operation will then be possible.

7. SEWING

⚠ CAUTION

Attach all safety devices before using the sewing machine. If the machine is used without these devices attached, injury may result.

Turn off the power switch at the following times.
The machine may operate if the treadle is depressed by mistake, which could result in injury.

- When threading the needle
- When replacing the bobbin and needle
- When not using the machine and when leaving the machine unattended

Do not touch any of the moving parts or press any objects against the machine while sewing, as this may result in personal injury or damage to the machine.

Use both hands to hold the machine head when tilting it back or returning it to its original position. If only one hand is used, the weight of the machine head may cause your hand to slip, and your hand may get caught.

7-1. Sewing

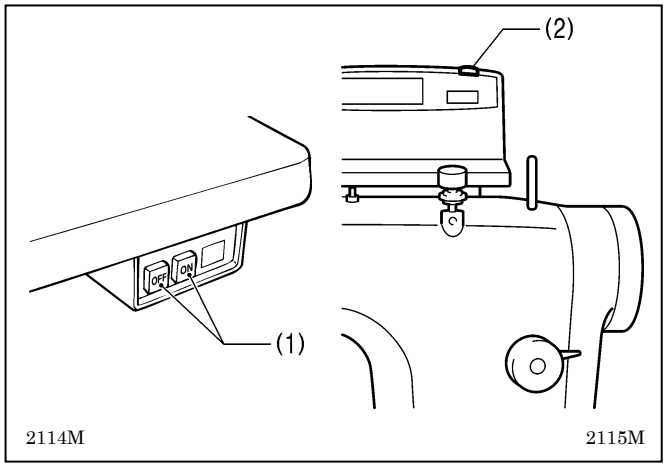

1. Press the ON power switch (1).
   The power indicator (2) will illuminate.
2. Use the operating panel to carry out the programming which is necessary for sewing.
   (Refer to the chapter on using the operating panel.)
3. Depress the treadle to start sewing.

7-2. Backtacking

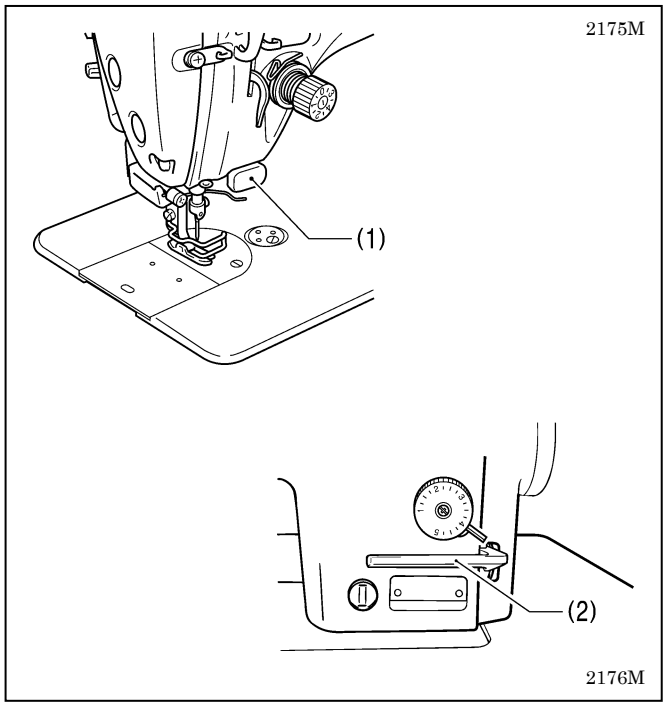

When the actuator (1) or the reverse lever (2) is pressed during sewing, the feed direction will be reversed. When it is released, the feed direction will return to normal.

7-3. Sewing condensed stitches

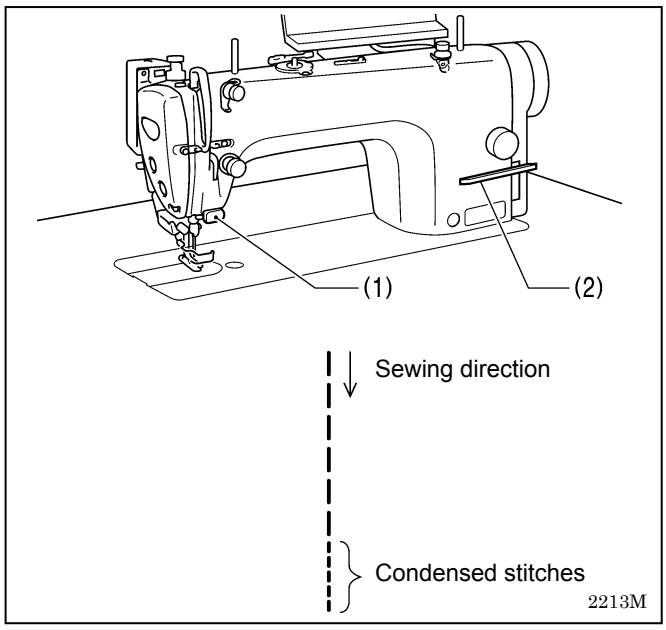

- If you press the actuator (1) or the reverse lever (2) while sewing is in progress, you can sew stitches (forward direction) with small stitch lengths.
- Before carrying out sewing, set the stitch length for condensed stitches as follows.

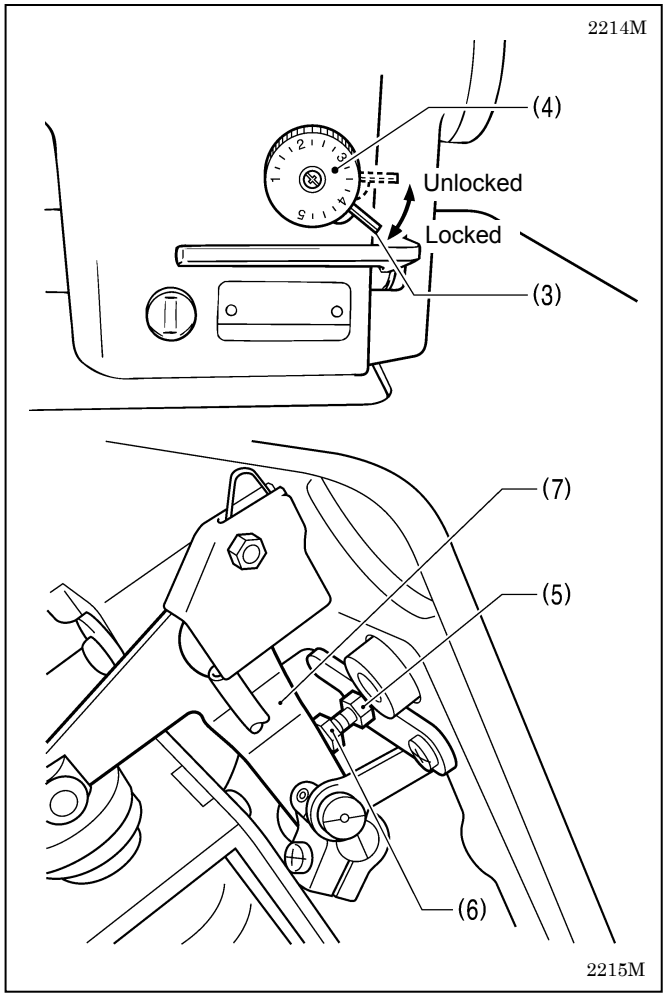

<Setting>

1. Lift up the dial lock lever (3) to release the lock.
2. Turn the stitch length dial (4) to the stitch length to be used for condensed stitches.
3. Tilt back the machine head.
4. Loosen the nut (5) and then turn the bolt (6) until its head is touching the solenoid lever (7).
5. Tighten the nut (5) to secure the bolt (6).
6. Return the machine head to its normal position.

<Sewing>

1. Return the stitch length dial (4) to the stitch length for normal sewing.
2. Push down the dial lock lever (3) to engage the lock.
3. Start sewing.
4. At the position where you would like to start sewing condensed stitches, press the actuator (1) or the reverse lever (2).
   (Condensed stitches are sewn while the actuator (1) or reverse lever (2) is being pressed.)

* To stop sewing condensed stitches, tighten the bolt (6) so that its head is not touching the solenoid lever (7).

8. THREAD TENSION

8-1. Adjusting the thread tension

⚠ CAUTION

Turn off the power switch before removing or inserting the bobbin case.
The machine may operate if the treadle is depressed by mistake, which could result in injury.

Good even stitches

0572M

0573M	Upper thread tension too weak or lower thread tension too strong	→ Increase the upper thread tension. Decrease the lower thread tension.
0574M	Upper thread tension too strong or lower thread tension too weak	→ Decrease the upper thread tension. Increase the lower thread tension.

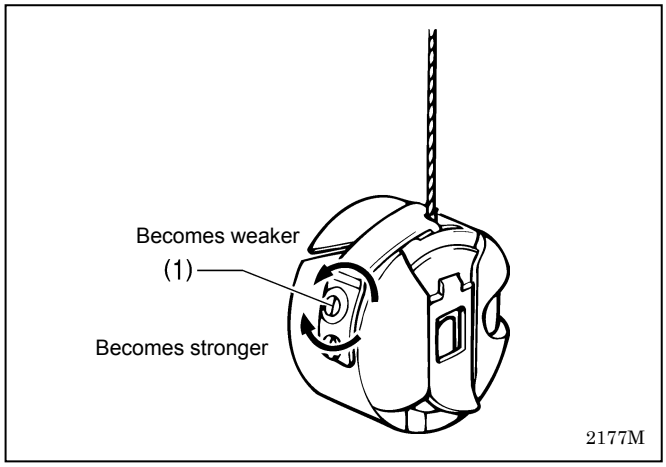

2177M

<Lower thread tension>

Adjust by turning the adjustment screw (1) until the bobbin case drops gently by its own weight while the thread end coming out of the bobbin case is held.

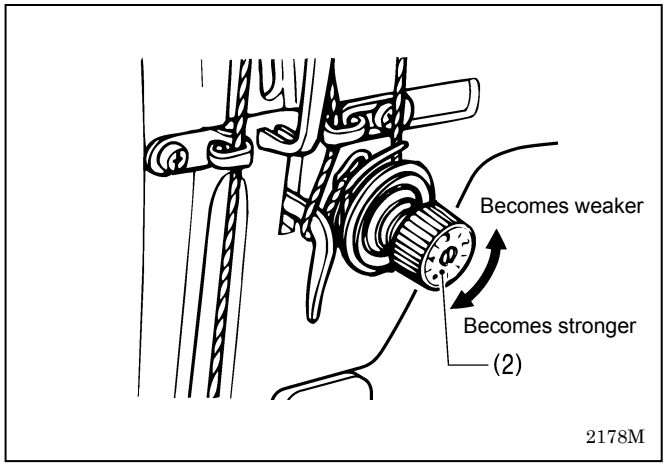

2178M

<Upper thread tension>

After the lower thread tension has been adjusted, adjust the upper thread tension so that a good, even stitch is obtained.

1. Lower the presser foot.
2. Adjust by turning the tension nut (2).

8-2. Adjusting the presser foot pressure

Correct stitches

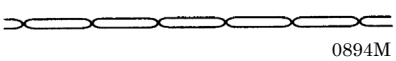

Upper thread

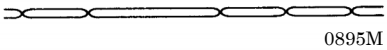

Skipped stitches occur

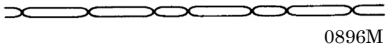

Uneven stitch length

→ Increase the pressure.

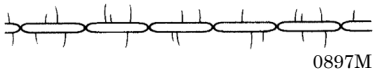

Stitches are puckered

→ Decrease the pressure.

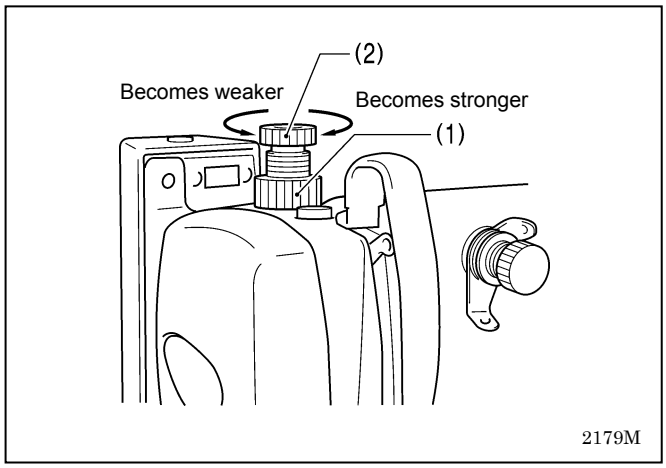

The presser foot pressure should be as weak as possible, but strong enough so that the material does not slip.

1. Loosen the adjusting nut (1).
2. Turn the presser adjusting screw (2) to adjust the presser foot pressure.
3. Tighten the adjusting nut (1).

8-3. Adjusting the trailing length after thread trimming

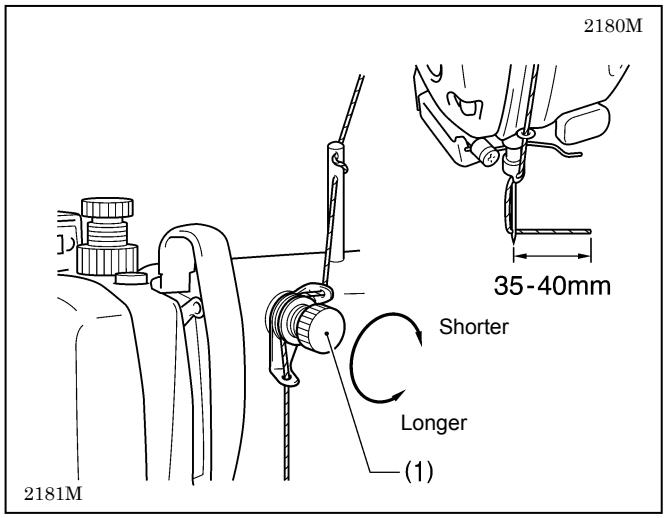

- At the time of thread trimming, the thread tension is loosened and tension is applied by the pretension (1) only.
- The standard trailing length for the upper thread is 35–40 mm.
- If the tension of the pretension (1) is increased, the lengths of the threads trailing from the needle tips will be reduced; if the tension is reduced, the lengths will be increased.

Adjust by turning the pretension (1).

9. CLEANING

⚠ CAUTION

Turn off the power switch before carrying out cleaning.
The machine may operate if the treadle is depressed by mistake, which could result in injury.

Be sure to wear protective goggles and gloves when handling the lubricating oil and grease, so that they do not get into your eyes or onto your skin, otherwise inflammation can result.
Furthermore, do not drink the oil or eat the grease under any circumstances, as they can cause vomiting and diarrhea.
Keep the oil out of the reach of children.

Use both hands to hold the machine head when tilting it back or returning it to its original position. If only one hand is used, the weight of the machine head may cause your hand to slip, and your hand may get caught.

9-1. Daily cleaning procedures

The followinig cleaning operations should be carried out each day in order to maintain the perfomance of this machine and to ensure a long service life.
Furthermore, if the sewing machine has not been used for a long period of time, carry out the following cleaning procedures before using it again.

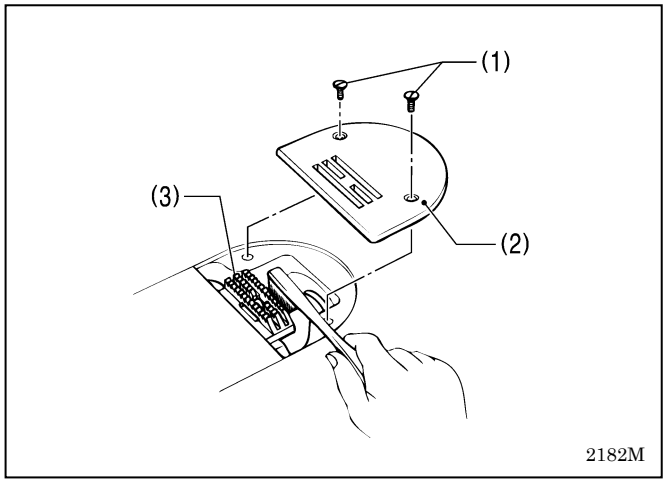

1. Cleaning

1. Raise the presser foot.
2. Remove the two screws (1), and then remove the needle plate (2).
3. Use a soft wire brush to clean any dust from the feed dog (3).
4. Install the needle plate (2) with the two screws (1).

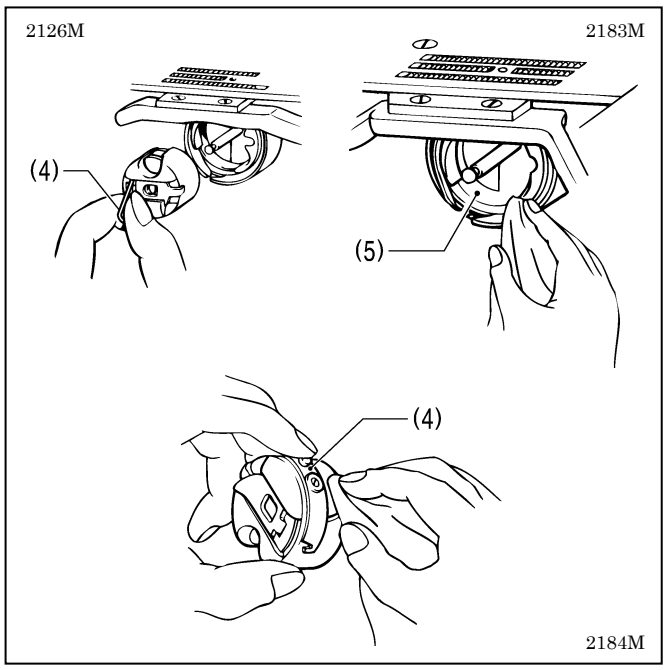

5. Tilt back the machine head.
6. Remove the bobbin case (4).
7. Wipe off any dust from the rotary hook (5) with a soft cloth, and check that there is no damage to the rotary hook (5).
8. Remove the bobbin from the bobbin case (4) and clean the bobbin case (4) with a cloth.
9. Insert the bobbin into the bobbin case (4), and then place the bobbin case (4) back into the machine.

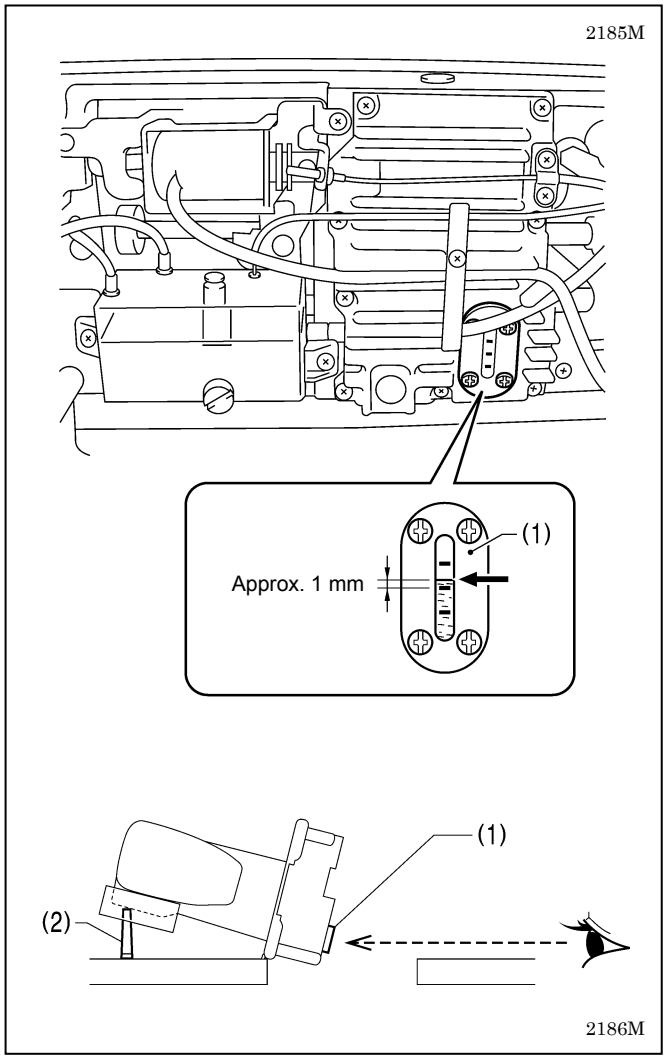

2. Lubrication

A. Gearbox oil quantity

NOTE:

- Check the quantity of oil in the gearbox immediately after tilting back the machine head.
  When the machine head is left for long periods in the tilted-back position, the amount of oil in the felt inside the gearbox drops and the oil level seen from the oil window (1) rises, so that it becomes impossible to measure the actual oil level accurately.
- The position of the oil level in the oil window (1) will vary depending on the angle of the machine head.
  Tilt back the machine head while the head rest (2) is installed in the correct position as shown in the table processing diagram on page 4 (refer to page 6).

<Checking the oil quantity>

The oil level should normally be approximately 1 mm above the center reference line in the oil window (1). (70 ml of lubricating oil is added to the gearbox at the time of shipment from the factory.)

1. Look at the oil window (1) from directly in front.
2. If the oil level is below the normal level, add more lubricating oil as described in the following procedure.

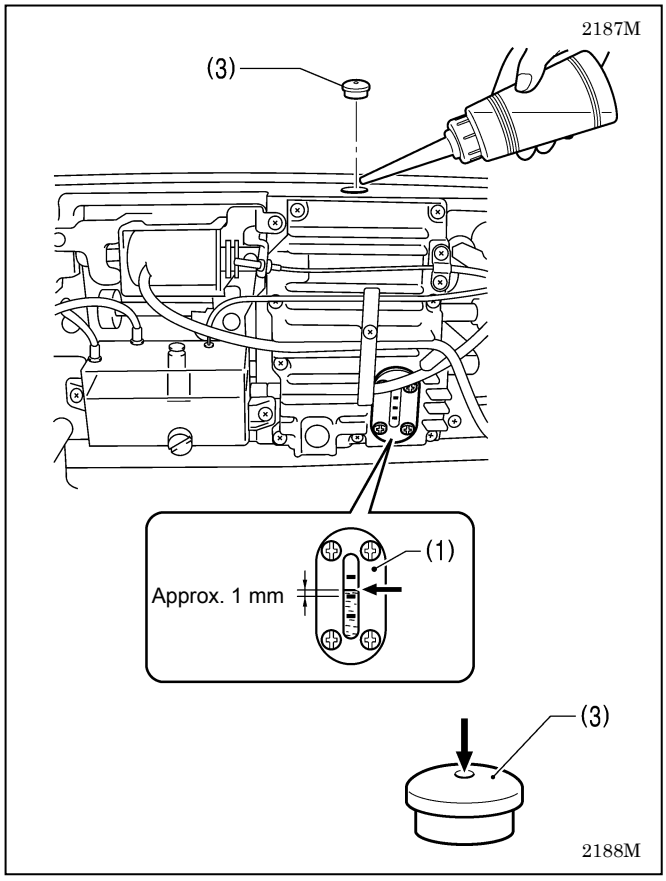

<Lubrication>

Use only the lubricating oil (Nisseki Mitsubishi Sewing Lube 10N; VG10) specified by Brother.

1. Remove the rubber cap (3).
2. Add lubricating oil until the oil level is approximately 1 mm above the center reference line in the oil window (1).
   Do not pour all of the lubricating oil in at once at this time. Pour the lubricating oil 10 ml at a time while checking the oil window (1).
   NOTE:
   Do not pour too much lubricating oil into the specified location.
   If too much oil is added, oil leaks may result.
3. Insert the rubber cap (3) securely.
4. Return the machine head to its original position.

NOTE:

The rubber cap (3) has a hole in it for adjusting the air pressure.
When replacing the rubber cap (3) use only the replacement part specified by Brother.

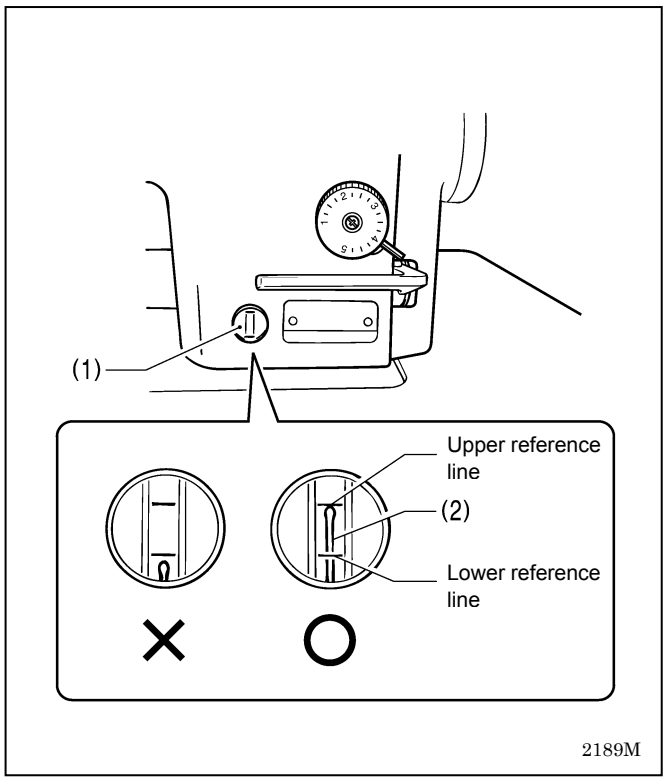

B. Oil tank oil quantity (-40[], 43[] specifications)

Check the oil gauge window (1), and add more oil if the oil gauge (2) is below the lower reference line.
(Refer to page 8.)

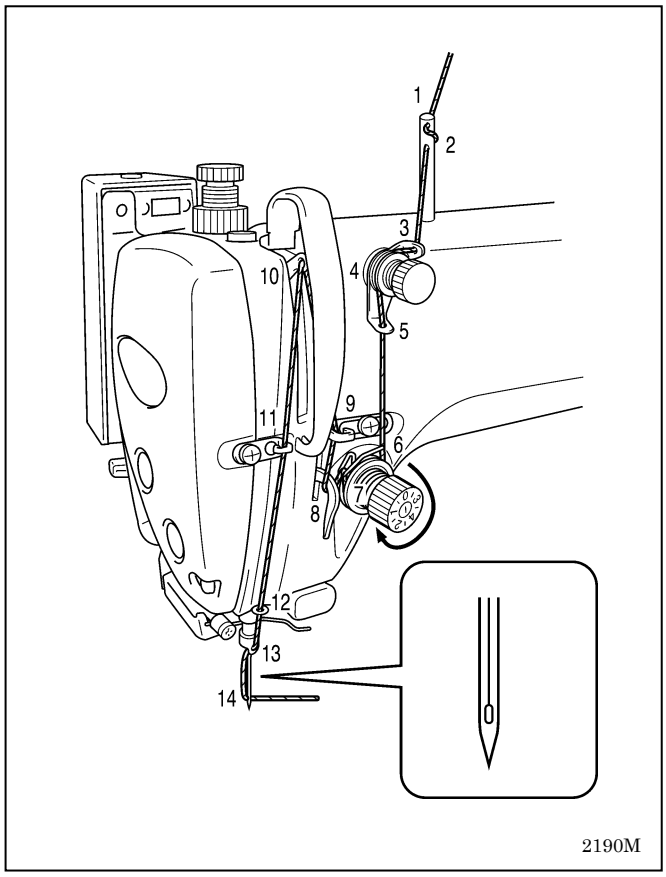

3. Checking

1. Replace the needle if it is bent or if the tip is broken.
2. Check that the upper threads have been threaded correctly. (Refer to page 15.)
3. Carry out a test sewing.

9-2. Applying grease (When “GREASEUP” appears)

If “GREASEUP" flashes on the main display (1) and a buzzer sounds when the power switch is turned on, it means that grease needs to be applied. (The sewing machine will not operate at this time, even if the treadle is depressed.)
Apply grease as required, while referring to the following for details.

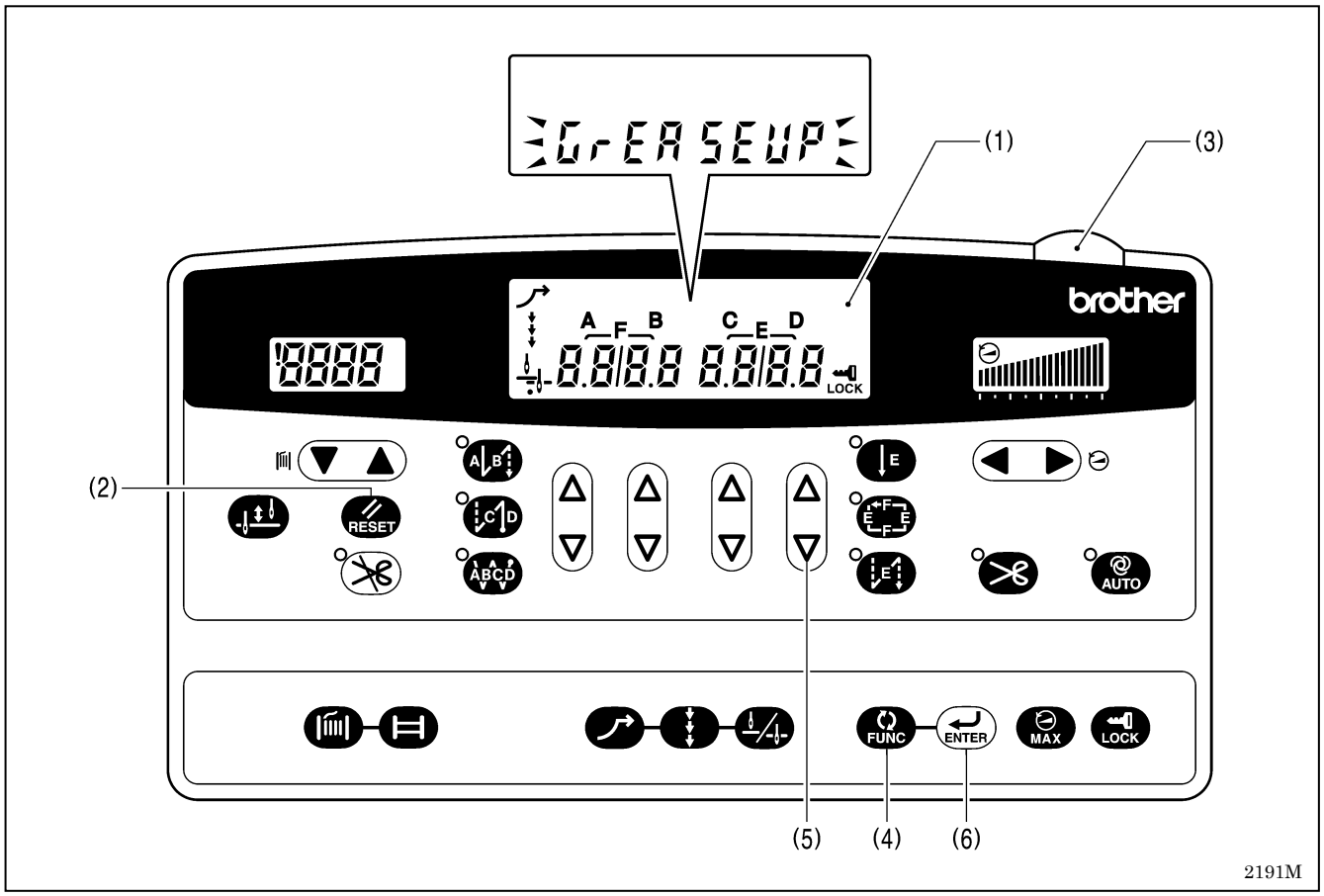

<To continue sewing without applying grease>

1. Press the RESET key (2).
2. The main display (1) will change to stitch number display mode, and sewing will be possible when the treadle is depressed. (The power indicator (3) will flash.)

NOTE

- If you do not apply grease when the “GREASEUP” notification appears, the notification will continue to appear and the power indicator (3) will flash each time the power is turned on until you reset the notification by carrying out the procedure on the following page.
- If you continue to use the sewing machine after the “GREASEUP” notification appears without applying grease (or without carrying out the reset procedure), “Err100” will appear after a certain period of time and the sewing machine will be forcibly prevented from operating for safety reasons.
  If this happens, apply grease and carry out the reset procedure.

<Applying grease>

Use Brother-specified grease (SA2355-001).

Using the tube

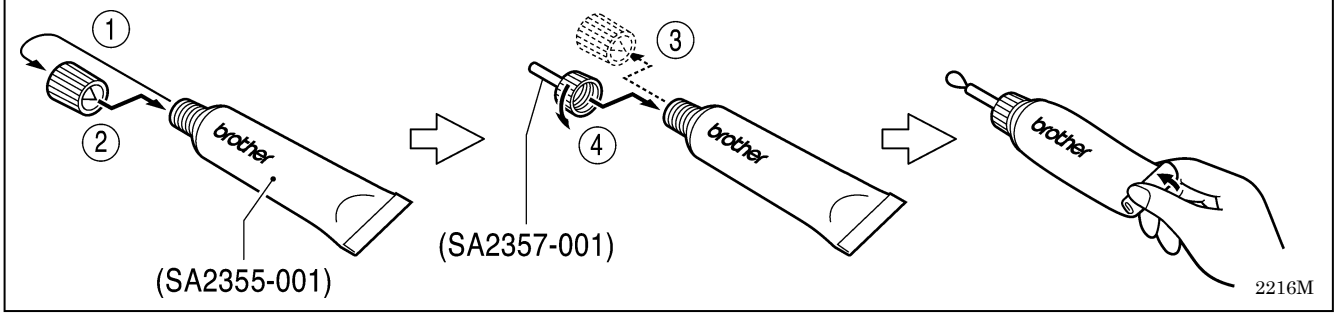

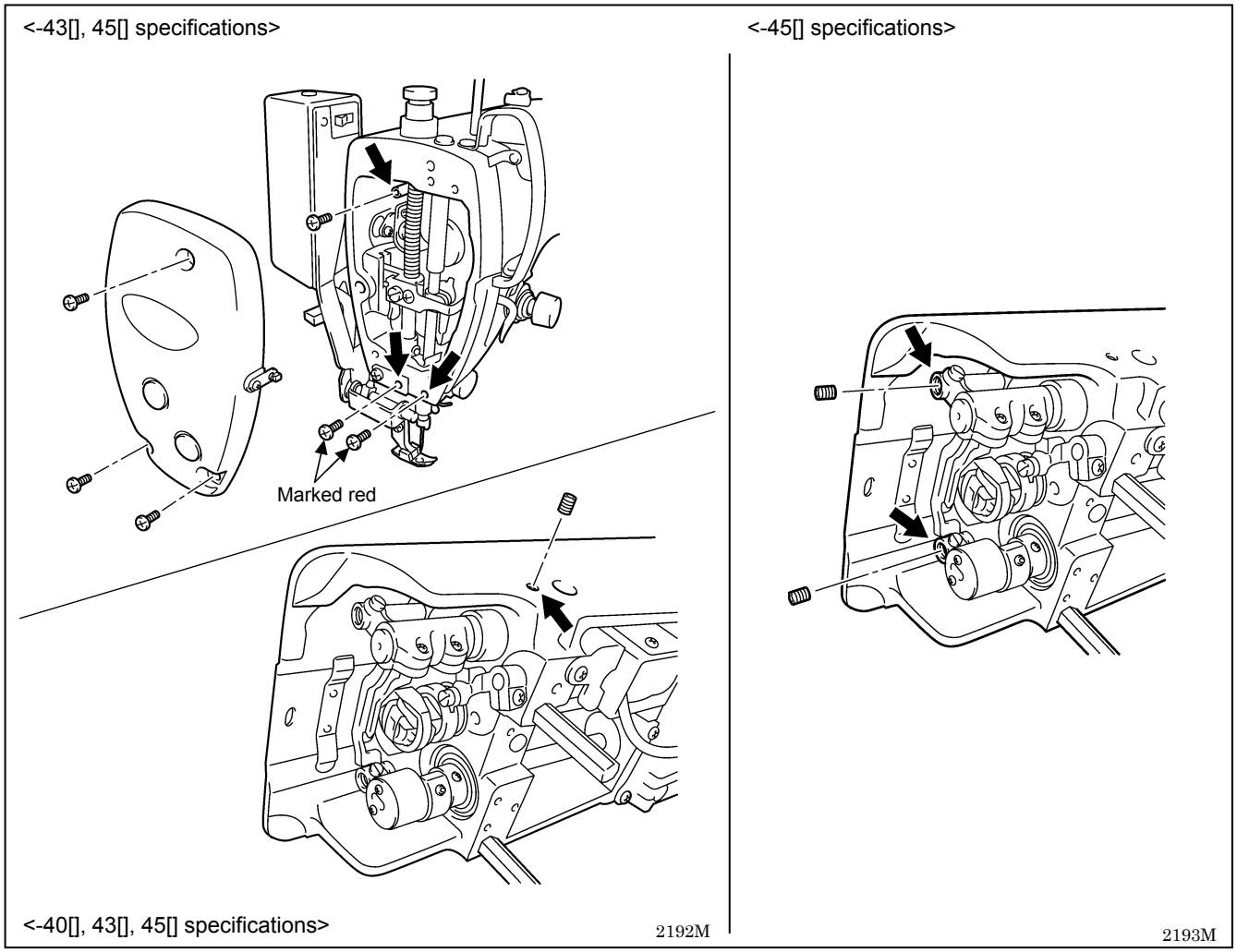

1. Turn the power switch to “OFF”.
2. Remove the screws and the set screws.
3. Apply grease to each of the holes until the grease overflows slightly.
4. Tighten the screws and the set screws in order to push the grease in.

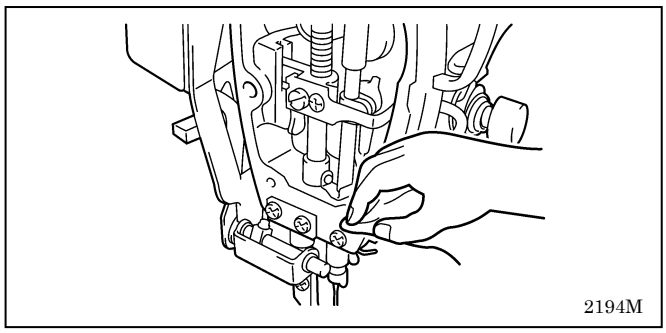

5. Turn the machine pulley by hand to move the needle bar up and down several times in order to disperse the grease.
6. Use a cloth to wipe away any excess grease from around the screws and set screws and from underneath needle bar bush D.
7. Carry out the reset procedure given below.

<Resetting the cumulative operating time>

After the grease has been applied, carry out the following procedure to reset the cumulative time between grease applications.

1. Turn the power switch to “ON”. “GREASEUP” will flash in the main display (1) and the buzzer will sound.
2. Press the RESET key (2). The main display (1) will change to stitch number display mode.
3. Press the FUNC (Function) key (4). “n.134 xxx” will appear in green in the main display (1).
   (xxx represents the time between grease applications.)
4. Press the rightmost ▽key (5). The “xxx” will change to “0”.
5. Press and hold the ENTER key (6) for two seconds or more.
   The buzzer will make a long beep, and then the main display (1) will change to stitch number display mode. (This completes the reset procedure.)

2139M

10. TROUBLESHOOTING

- Please check the following points before calling for repairs or service.
- If the following remedies do not fix the problem, turn off the power switch and consult a qualified technician or the place of purchase.

⚠ DANGER

Wait at least 5 minutes after turning off the power switch and disconnecting the power cord from the wall outlet before opening the face plate of the control box. Touching areas where high voltages are present can result in severe injury.

⚠ CAUTION

Turn off the power switch and disconnect the power cord before carrying out troubleshooting.
The machine may operate if the treadle is depressed by mistake, which could result in injury.

10-1. Sewing

Items with a "*" in the "Page" column should only be checked by a qualified technician.

	Problem	Possible cause	Page
1	Upper thread is not tight. 0573M	• Is the upper thread tension too weak, or is the lower thread tension too strong? Adjust the upper thread tension or lower thread tension.	28
2	Lower thread is not tight. 0574M	• Is the lower thread tension too weak, or is the upper thread tension too strong? Adjust the lower thread tension or upper thread tension.	28
3	Loops appear in seam. 0977M	• Is the thread path not smooth enough? Use a file with a fine grain or sandpaper to polish smooth the thread path. • Is the bobbin not turning smoothly? Pull out the lower thread to check that there is no slackness in the thread tension, or replace the bobbin or bobbin case.	
4	Skipped stitches occur while sewing 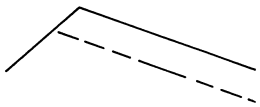 0470M	• Is the needle tip bent? Is the needle tip blunt? If the needle tip is bent or broken, replace the needle. • Is the needle properly installed? If it is incorrect, install the needle correctly. • Is the machine properly threaded? If it is incorrect, thread the thread correctly. • Is the presser foot pressure too weak? Adjust the presser foot pressure. • Is the needle too thin? Replace the needle with a needle that is one rank thicker. • Is the presser foot too high? Adjust the height of the presser foot. • Is the thread take-up spring too weak? Adjust the tension of the thread take-up spring.	13 15 29 * *

	Problem	Possible cause	Page
5	Skipped stitches at sewing start Thread unravelling at sewing start 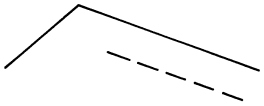 0749M	• Is the thread take-up spring tension too strong? Reduce the tension of the thread take-up spring. • Is the thread take-up spring operating range too large? Lower the position of the thread take-up spring. • Are the trailing lengths of the upper threads too short after thread trimming? Adjust the pretension. • Are the threads not being trimmed cleanly? Sharpen the fixed knives, or replace the fixed and movable knives if necessary. • Is the needle too wide? Try using a needle with a count that is one lower than the current needle. • Is the length of thread trailing out from the bobbin case after thread trimming too short. If the bobbin is spinning loosely, replace the anti-spin spring in the bobbin case. • Is the sewing speed too fast at the sewing start? Use the slow start feature.	* * 29 * 13 *
6	Uneven seam 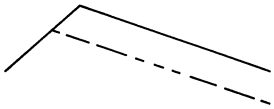 0473M	• Is the presser foot pressure too weak? Adjust the presser foot pressure. • Is the feed dog too low? Adjust the feed dog height. • Is the bobbin scratched? If the bobbin is damaged, smooth it with an oiled grindstone or replace it.	29 *
7	Large degree of puckering (excess tension) 0978M	• Is the upper thread tension too strong? Make the upper thread tension as weak as possible. • Is the lower thread tension too strong? Make the lower thread tension as weak as possible. • Are the thread take-up spring tensions too strong? Make the thread take-up spring tension as weak as possible. • Is the thread take-up spring operating range too large? Lower the position of the thread take-up spring to as low a position as possible. • Is the presser foot pressure too strong? Adjust the presser foot pressure. • Is the sewing speed too fast? Use the sewing speed control keys to gradually reduce the sewing speed.	28 28 * * 29 18
8	Material slippage 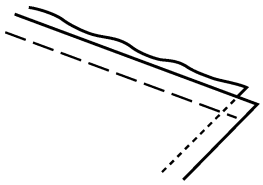 0750M	• Is the presser foot pressure too strong? Adjust the presser foot pressure.	29

	Problem	Possible cause	Page
9	Lower thread is tangled at the sewing start. Spinning of bobbin during thread trimming 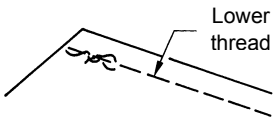 0751M	• Is the bobbin spinning direction correct when the lower thread is being pulled? Set the bobbin so that it turns in the opposite direction to the rotary hook. • Is there too much thread wound onto the bobbin? The bobbin winding amount should not be more that 80 %. 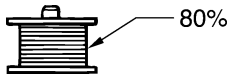 2124M • Is the anti-spin spring attached? Attach the anti-spin spring. • Is the bobbin turning smoothly? If the bobbin is not turning smoothly, replace the bobbin. • Is a bobbin other that the light-alloy bobbins specified by Brother being used? Use only bobbins which are specified by Brother.	14 14 13 13
10	Upper and lower threads are breaking. 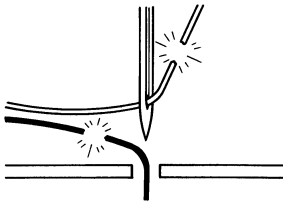 0471M	• Is the needle bent or is the needle tip broken? Replace the needle if it is bent or broken. • Is the needle properly installed? If it is incorrect, install the needle correctly. • Is the machine properly threaded? If it is incorrect, thread the thread correctly. • Is the rotary hook sufficiently lubricated? (-40[], 43[] specifications) If the oil gauge is down to the lower reference line in the oil gauge window, add more oil. • Is the upper or lower thread tension too weak or too strong? Adjust the upper thread or lower thread tension. • Is the upper thread may be loose because the thread take-up spring operating range is too small? Adjust the position of the thread take-up spring. • Is the rotary hook, feed dog or other part damaged? If they are damaged, smooth them with an oiled grindstone or replace the damaged parts. • Is the thread path damaged? If the thread path is damaged, smooth it with sandpaper or replace the damaged part.	13 15 8 28 * * *
11	Incorrect thread trimming (Upper and lower threads are both not being trimmed)	• Is the fixed knife or movable knife damaged or worn? Replace the fixed knife or the movable knife.	*
12	Incorrect thread trimming (Upper thread or lower thread is not being trimmed)	• Is the needle properly installed? If it is incorrect, install the needle correctly. • Is the fixed knife or movable knife blunt? Replace the fixed knife or the movable knife.	13 *

	Problem	Possible cause	Page
13	Broken needles 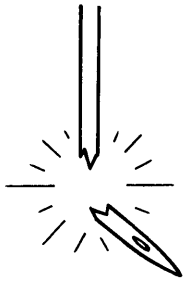 0469M	• Is the material being pushed or pulled with excessive force during sewing? • Is the needle properly installed? If it is incorrect, install the needle correctly. • Is the needle bent, is the needle tip broken, or is the needle hole blocked? Replace the needle. Caution • It is extremely dangerous to leave any pieces of broken needle sticking in the material. If the needle breaks, search for all pieces until the whole of the needle is found again. • Furthermore, we recommend we recommend that through steps be taken to account for such needles to comply with product liability regulations.	13
14	Oil gauge (1) is not visible in oil gauge window. 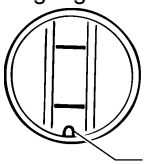 (1) 2195M	• Is the oil tank empty? (-40[], 43[] specifications) Fill the oil tank with oil.	8
15	Machine does not operate when power is turned on and treadle is pressed.	• Is the power supply connector disconnected from the control box? Insert the connector securely. 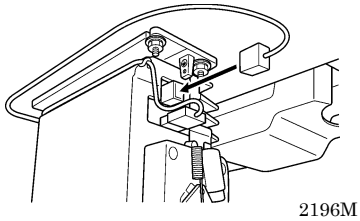 2196M	11
16	Machine does not operate at high speed.	• Is the sewing speed setting or backtack speed setting incorrect? Use the sewing speed control keys to set the high speed.	18
17	Machine stops during sewing.	• Is the fixed stitch key turned on? Press the fixed stitch key so that the indicator turns off. • Is the power supply voltage too low? Check the power supply. (If the power cord is too long or too many appliances are being run from a single outlet, this may cause voltage drops which will in turn cause the reset function to activate and stop the machine, even if the power supply itself is normal.)	18 *
18	Nothing appears on the operation panel display.	• Is the power supply connector disconnected from the control box? Insert the connector securely. 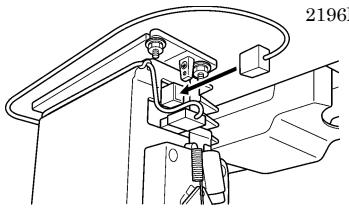 2196M • Is the operation panel connector inside the control box disconnected? Insert the connector securely. 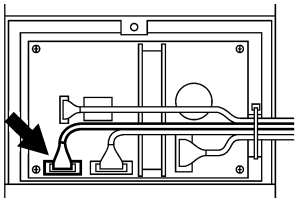 2197M	11 10*

	Problem	Possible cause	Page
19	"GREASEUP" flashes on the operation panel when the power is turned on.	• This display is to notify you that it is time to apply grease. Apply grease.	33*

10-2. Error code displays

If an error code appears on the operation panel display

1. Make a note of the error code and then turn off the power.
2. After the operation panel display has turned off, eliminate the cause of the error and then turn the power back on.

2198M

Items with a "*" in the "Page" column should only be checked by a qualified technician.

Error code	Possible cause	Page
Err 1	• Does the power supply voltage match the control box voltage specifications? Check the voltage. 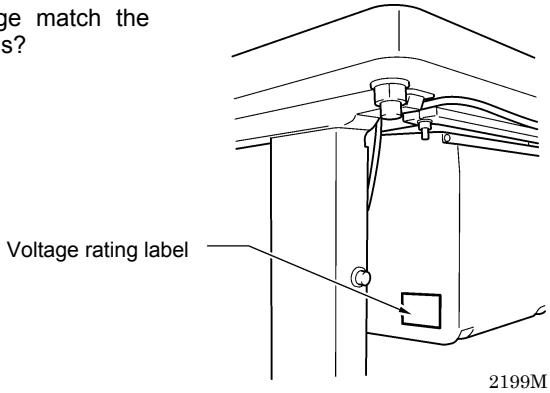 2199M	*
Err 2	• Is the electrical equipment connector inside the control box disconnected? Insert the connector securely. 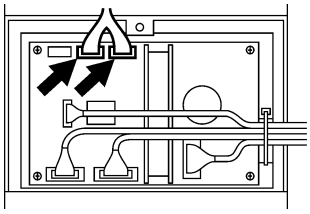 2200M	*
Err 3	• Is the encoder connector inside the control box disconnected? Insert the connector securely. 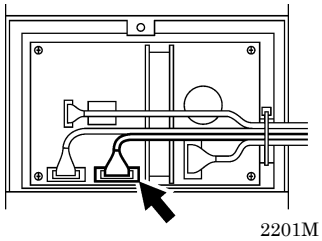 2201M	10*

Error code	Possible cause	Page
Err 4	• Is the motor connector disconnected from the control box? Insert the connector securely. 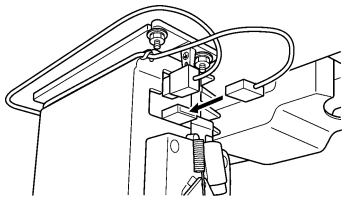 • Has the machine locked up? Turn off the power and then turn the machine pulley by hand and check that it turns easily. 2202M	11
Err 5	• Is the machine connector inside the control box disconnected? Insert the connector securely. 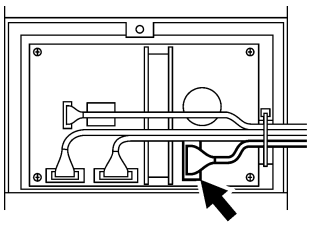 • Is the machine head tilted back? Return the machine head to its normal position. 2203M	10*
Err 8	• This appears on the display when the sewing machine has been operating continuously for 3 minutes or more. Turn the power switch off and then back on again, and then operate the sewing machine normally.	
Err 13	• Is the treadle unit connector inside the control box disconnected? Insert the connector securely. 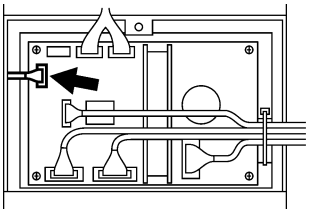 2204M	*
Err 100 (GrEASEUP)	• This appears on the display when the sewing machine has continued to be used for a certain period after the “GREASEUP” notification appears without the grease being applied (without the reset procedure being carried out). Apply grease and then carry out the reset procedure.	33*
Err 101 (diP SW4)	• Is DIP switch No.4 inside the control box set to ON? Set DIP switch No.4 to OFF. 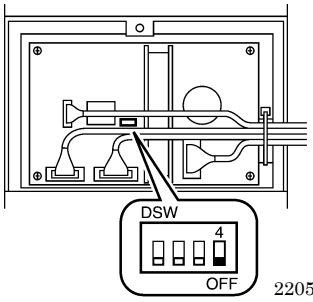 2205M	*

If an error code that is not listed above appears, contact the place of purchase.

brother®

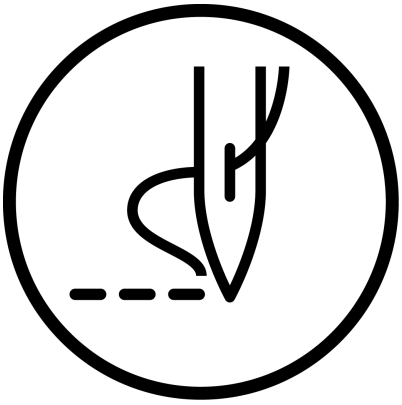

INSTRUCTION MANUAL

BROTHER INDUSTRIES, LTD.
15-1, Naeshiro-cho, Mizuho-ku, Nagoya 467-8561, Japan. Phone: 81-52-824-2177

877-S20
SA2016-001
2003.02.B(1)