Price Pfister®

Pfreshest Ideas in Pfaucets.

R89M•808M Series

Serie R89M•808M

Série R89M•808M

Marielle™

Tub & Shower • Shower Only

Trim Kit

Juego con acabado para

Tinas y duchas o • duchas solamente

Bain et douche • Douche seule

Kit de garniture

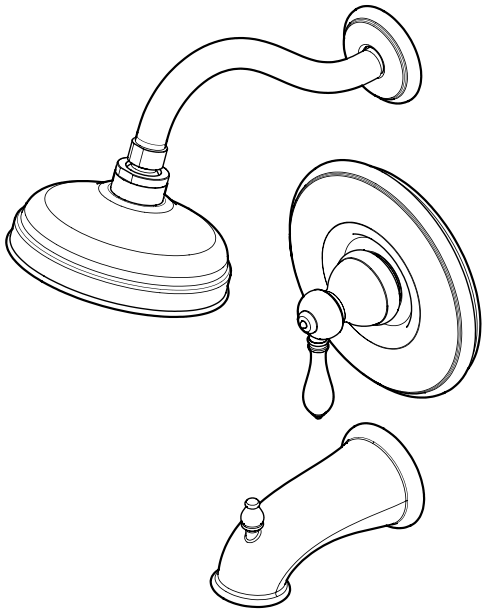

03-10-04 EO6643E 28693-0100

Copyright © 2004, Price Pfister, Inc.

A BLACK&DECKER COMPANY

ENGLISH

Thank you for purchasing this Price Pfister product. All Price Pfister products are carefully engineered, and factory tested to provide long trouble-free use under normal conditions. This product is easy to install using basic tools and our easy to follow illustrated instructions. If you have any questions regarding your product installation call 1-800-Pfaucet (1-800-732-8238).

1 BEFORE PROCEEDING

WARNING: Read all the instructions completely before proceeding. Price Pfister recommends calling a professional if you are uncertain about installing this product!

This product should be installed in accordance with all local and state plumbing and building codes.

WARNING: This product has been designed for use with the Price Pfister 0X8 series pressure balancing valve. It will not work with any other product.

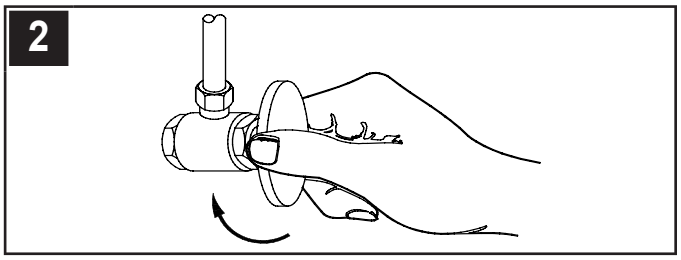

2 SHUT OFF WATER SUPPLY

Locate water supply inlets and shut off the water supply valves. These are usually found near the water meter. If you are replacing an existing unit, remove the old unit and clean the mounting surface thoroughly.

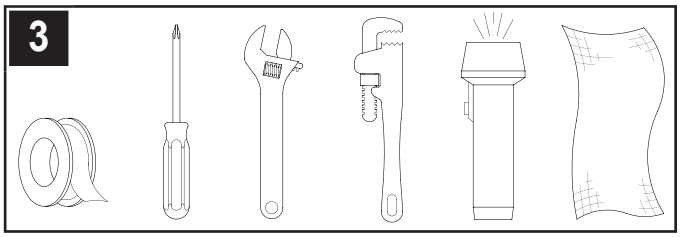

3 TOOLS RECOMMENDED

- PTFE plumber's tape or thread sealant
- Philips head screwdriver
- Adjustable wrench
- Pipe wrench
- Flashlight
- Cloth

Your installation will require a pipe nipple for the spout installation as well as other additional tools.

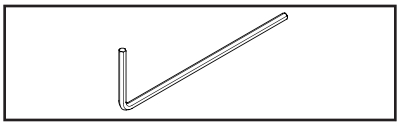

This product comes with a Hex Wrench for tightening a Set Screw into the Hub.

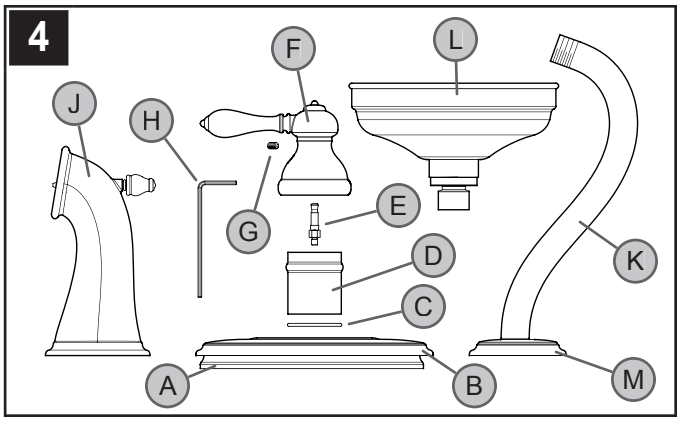

4 CHECKING THE CONTENTS OF THE BOX

Upon opening the box, check to ensure that all of the following items are included.

A Gasket Flange	**B** Trim Flange	**C** Washer
D Retainer Sleeve	**E** Extension Stem	**F** Hub & Handle
G Set Screw	**H** Hex Wrench	**J** Diverter Spout
K Shower Arm	**L** Shower Head	**M** Shower Flange

If any of these items are missing, please contact Price Pfister Consumer Service at 1-800-Pfaucet (1-800-732-8238).

INSTALLATION STEPS

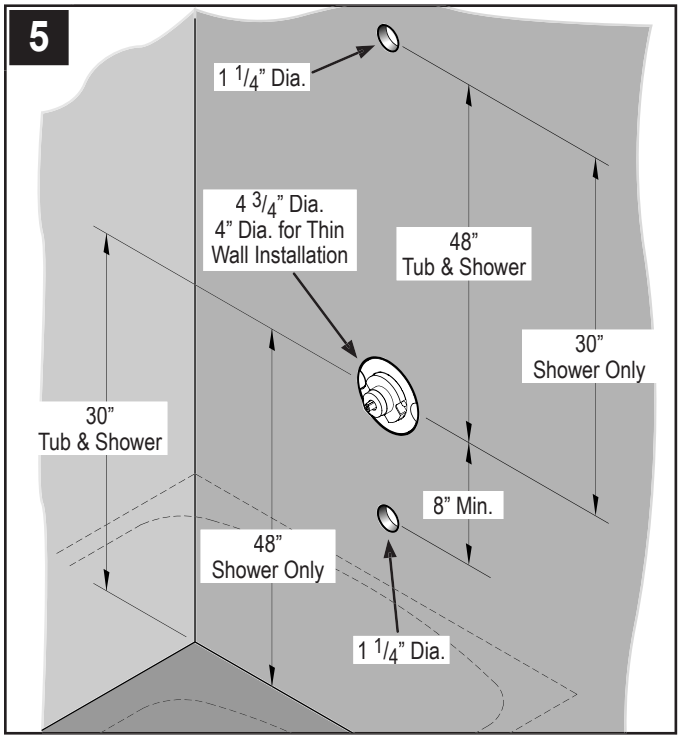

5 WORK AREA INSPECTION

Verify that the hole sizes and positions in the wall are correct.

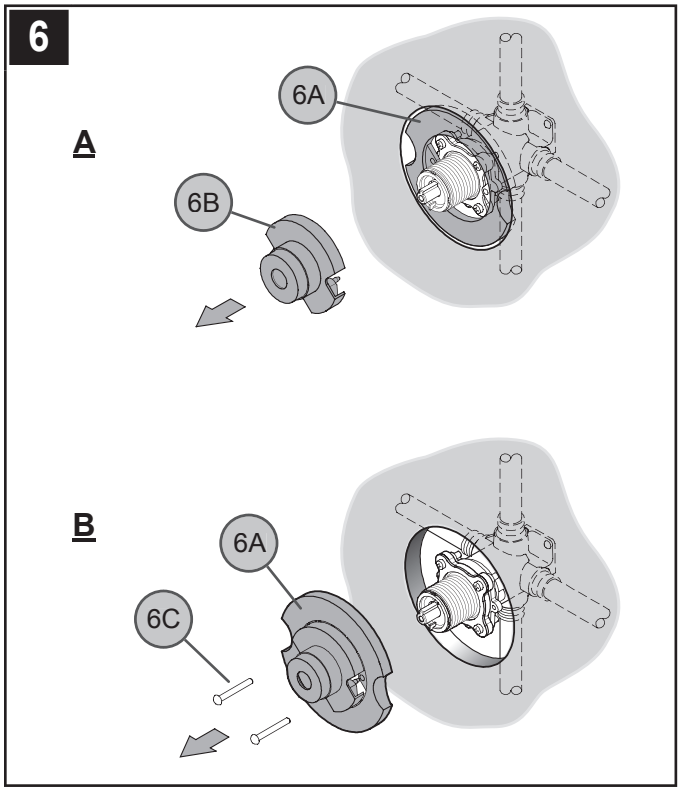

6 PLASTERGUARD OPTIONS

A. For installation using plasterguard, knock out Center Section (*6B*) from Plasterguard (*6A*). The use of plasteguard is optional for standard installations.

B. For installation without plasterguard, remove Screws (*6C*), and Plasterguard (*6A*).

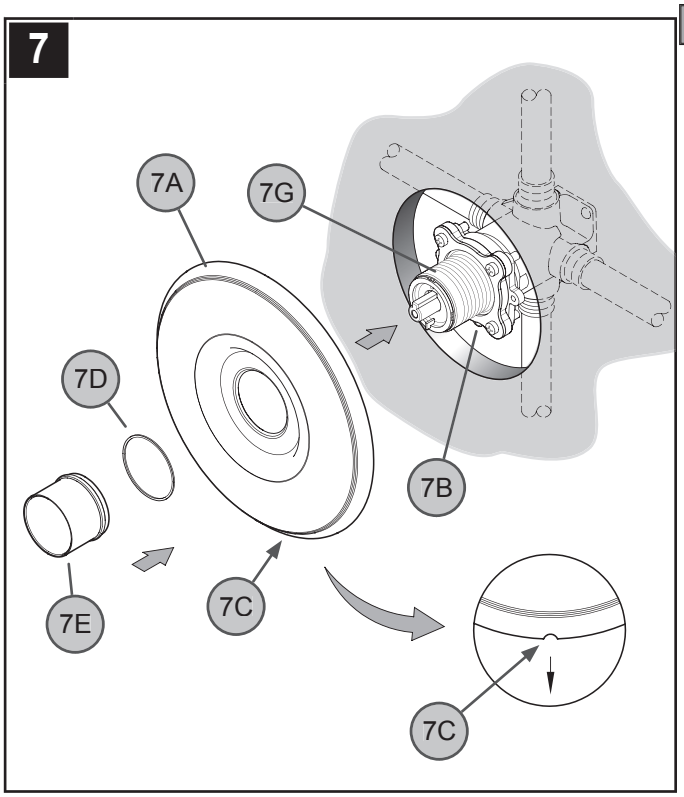

7 TRIM FLANGE ATTACHMENT

Position Flange (*7A*) on Valve (*7B*) with Drain Hole (*7C*) at the bottom. Place Protective Washer (*7D*) on the short end of the reversible Retainer Sleeve (*7E*). Screw Retainer Sleeve (*7E*) onto threaded section of the Stem and Bonnet (*7G*). Tighten Retainer Sleeve (*7E*) by hand until Flange (*7A*) is snug to finished wall surface. If the short end of the Retainer Sleeve (*7E*) is too short, reverse it to use the longer end.

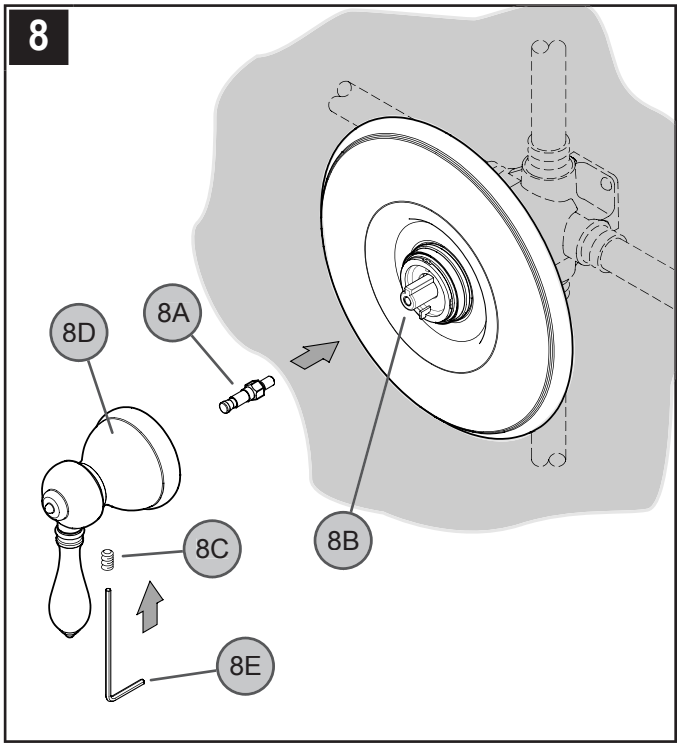

8 HANDLE ATTACHMENT

Screw Stem Extender (*8A*) onto the Valve Stem (*8B*). Thread the Set Screw (*8C*) into the Handle (*8D*) and thread it in only three to four turns. Place Handle (*8D*) onto the Stem Extender (*8A*) and tighten the Set Screw (*8C*) by using the Hex Wrench (*8E*) that is provided.

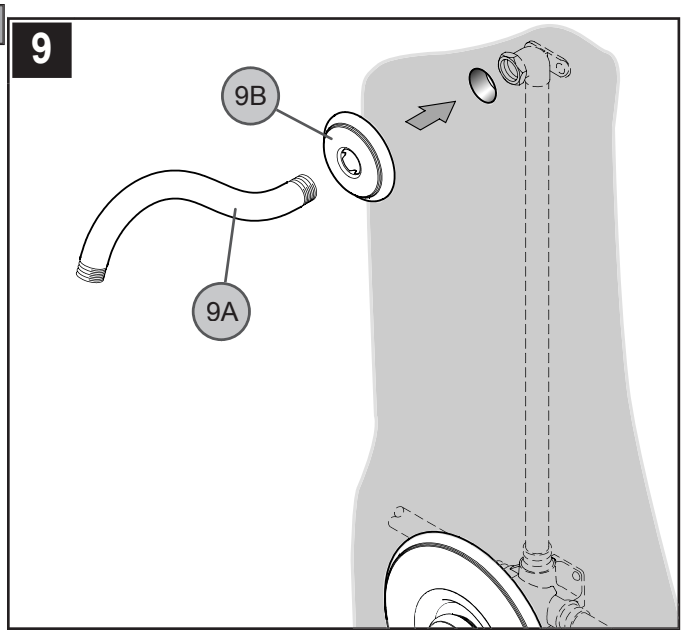

9 SHOWER ARM INSTALLATION

Insert the long end of Shower Arm (*9A*) through the Shower Flange (*9B*). Apply PTFE plumber's tape to both ends of Shower Arm (*9A*) according to manufacturer's instructions. Screw long end of Shower Arm (*9A*) into pipe elbow inside the wall. Slide Shower Flange (*9B*) tight to the wall.

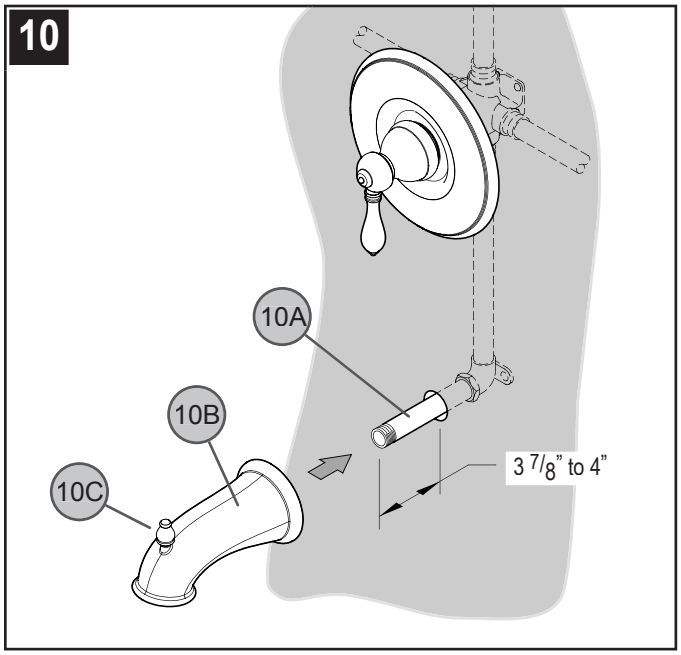

10 SPOUT INSTALLATION

Apply PTFE plumbers tape on both ends of Pipe Niple (*10A*) (not included). Screw Pipe Niple (*10A*) into the elbow inside the wall and tighten with pipe wrench. The Pipe Niple (*10A*) is to project 3 $^{7}/_{8}$" to 4" from the finished wall. Screw Tub Spout (*10B*) onto Pipe Niple (*10A*) and tighten until Spout is properly positioned and flush to the finished wall.

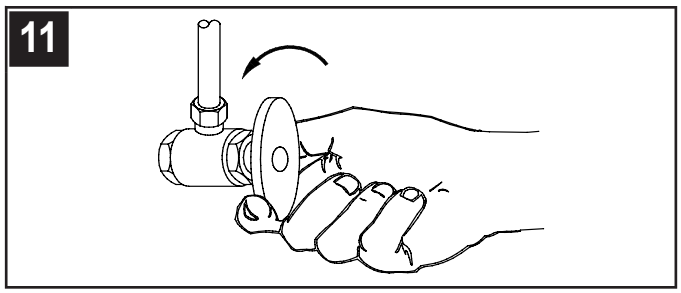

11 UNIT START UP

Turn on hot and cold water supplies, and check all connections for leaks.

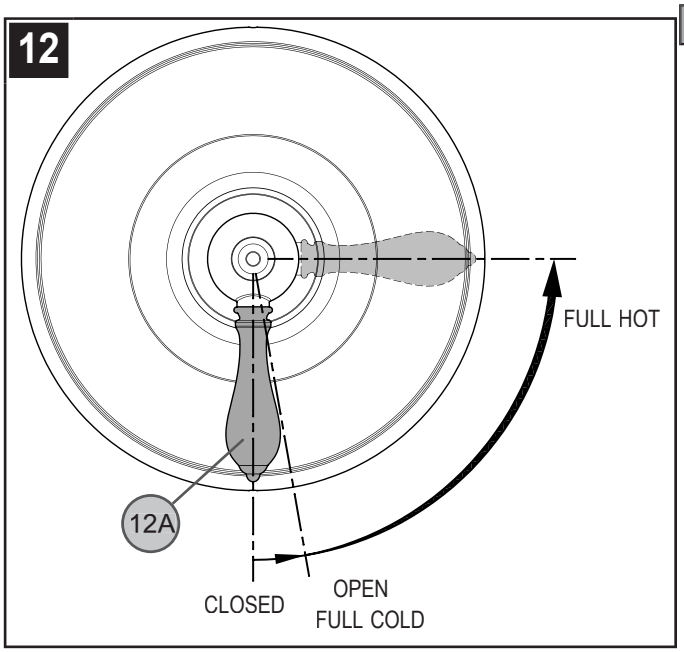

12 VALVE FUNCTION
By rotating the Lever Handle (*12A*) slightly counterclockwise, the valve will be fully activated to the "COLD" position. The water temperature can be increased by continuing to rotate the Lever Handle (*12A*) in a counterclockwise direction.

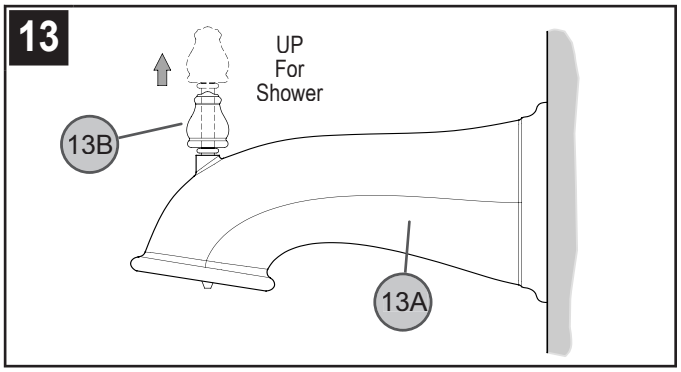

13 TUB SPOUT FUNCTION
When the valve is turned on, water normaly flows through the Tub Spout (*13A*).To activate the shower, turn valve on and pull the Knob (*13B*) up. Hold on until water flows continiously from the shower arm.

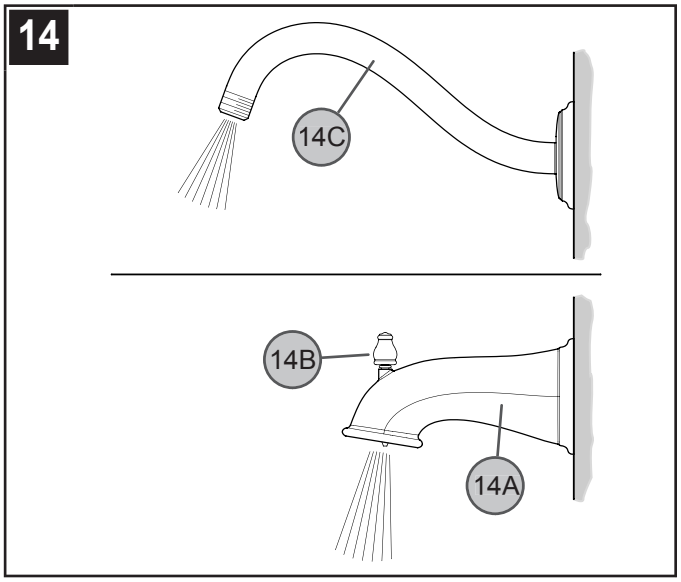

14 FINAL FLUSHING
For final flushing, turn valve on and allow water to run through the Tub Spout (*14A*) for several minutes. Pull Spout Knob (*14B*) up to allow water to run through Shower Arm (*14C*). Allow water to run for several minutes untill all foreign mater clears the line.

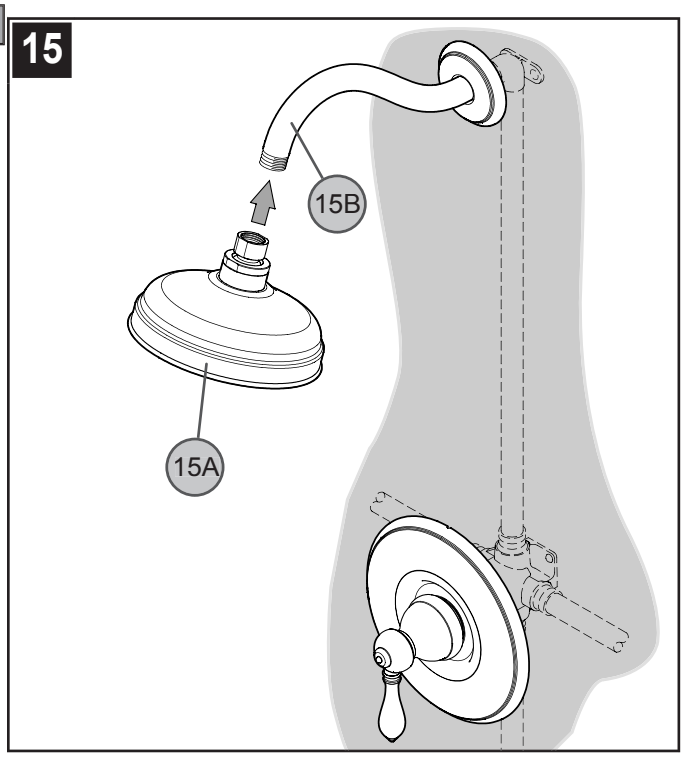

15 SHOWER HEAD INSTALLATION
Thread Shower Head (*15A*) onto Shower Arm (*15B*).

MAINTENANCE & CARE

CAUTION: Maintenance

DISASSEMBLY

1. Replacement parts may be available at the store where you purchased your faucet.
2. When replacement parts are not available, please write or call Price Pfister Consumer Service.
3. **Always turn off water and relieve pressure before working on your faucet.**

NOTE: Trim Care

Cleaning Instructions:
For all Handles and decorative finishes, use only a soft damp cloth to clean and shine. Use of polish, detergents, abrasive cleaners, organic solvents or acid may cause damage. **Use of other than a soft damp cloth will nullify our warranty!**

Special Trim:
Trim products which contain Porcelain or other similar substance are not acceptable for public areas or Commercial use. Installation of Said Trim is at Users Risk!

1–800–PFAUCET (1–800–732–8238)

For Toll-Free Pfaucet information call
1–800–PFAUCET (1–800–732–8238)
or visit www.pricepfister.com

- Installation Support
- Care and Warranty Information

TROUBLE SHOOTING TIPS

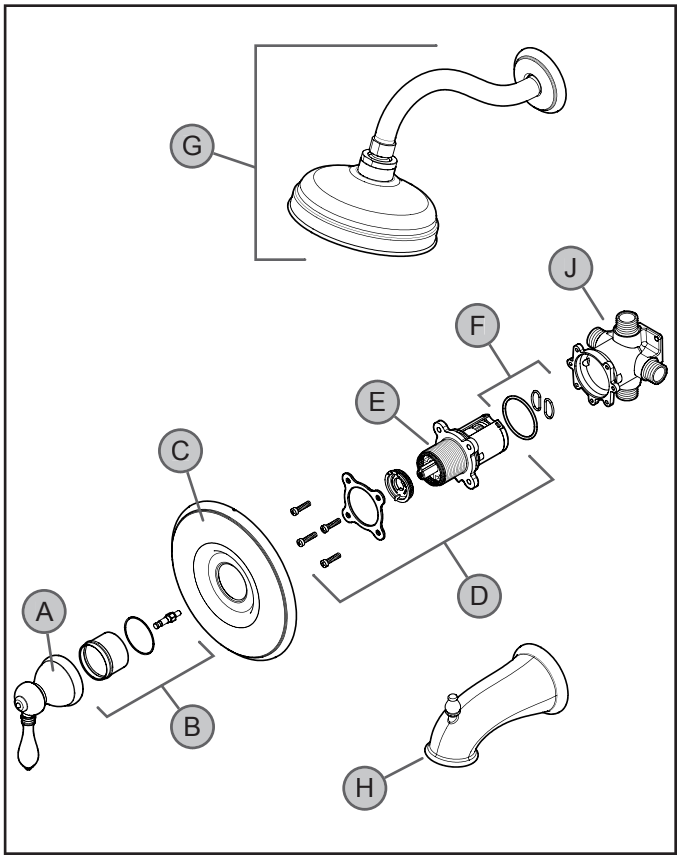

Temperature or flow does not remain consistent.
The Cartridge Assembly (*D*) may need cleaning. Shut off water supply. Remove Handle Assembly (*A*), unscrew Retainer Sleeve (*B*) and remove Flange (*C*). Remove Cartridge assembly (*D*) and inspect Cartridge (*E*) and inlets for debris or sediment and flush with water. Reassemble whole unit and test. If problem persists you may need to replace the Cartridge (*E*).

Sleeve (B) is too short.
Extension kit 910-563 is available at a nominal charge for valves which have been roughed-in too far back in the wall. The kit contains a one inch stem extension, and longer screw and a sleeve which is one inch longer than the 972-300.

Dripping from either the tub spout or shower head.
Clean the Cartridge Assembly (*D*). Check to ensure the two Oval O-Rings (*F*) on the back of the Cartridge (*E*) are in place. Reassemble cartridge, stem and bonnet assembly and handle. Turn on the water and test. If the unit still leaks, replace the Cartridge (*E*).

Make sure that both hot and cold water inlets are turned on.

Water flow is very low.
Check the Cartridge Assembly (*D*), for debris. Sediment where the water enters the Shower Head (*G*) can also cause this symptom.

Water starts out hot and becomes cooler as handle is rotated counter clockwise.
This is a potentially hazardous situation and should be corrected before using the unit. Check the hot and cold inlet positions (hot- left cold-right). If you have a back to back installation, (where hot and cold inlets are reversed) refer to Valve Body instruction sheets for back to back installation.

Water flows from the shower head while filling the tub.
Check the position of the Valve Body (*J*). The letters “SHWR” should be cast into the top and “TUB” on the bottom.

Water doesn’t get hot enough.
Remove Handle (*A*), Sleeve (*B*) and Flange (*C*) and then refer to Valve Body instruction sheets for adjusting temperature range.

Water flows from the tub spout while using the shower.
The seal inside of the diverter mechanism may have become dislodged. The Spout (*H*) may need replacement.

Price Pfister®
Pfreshest Ideas in Pfaucets.

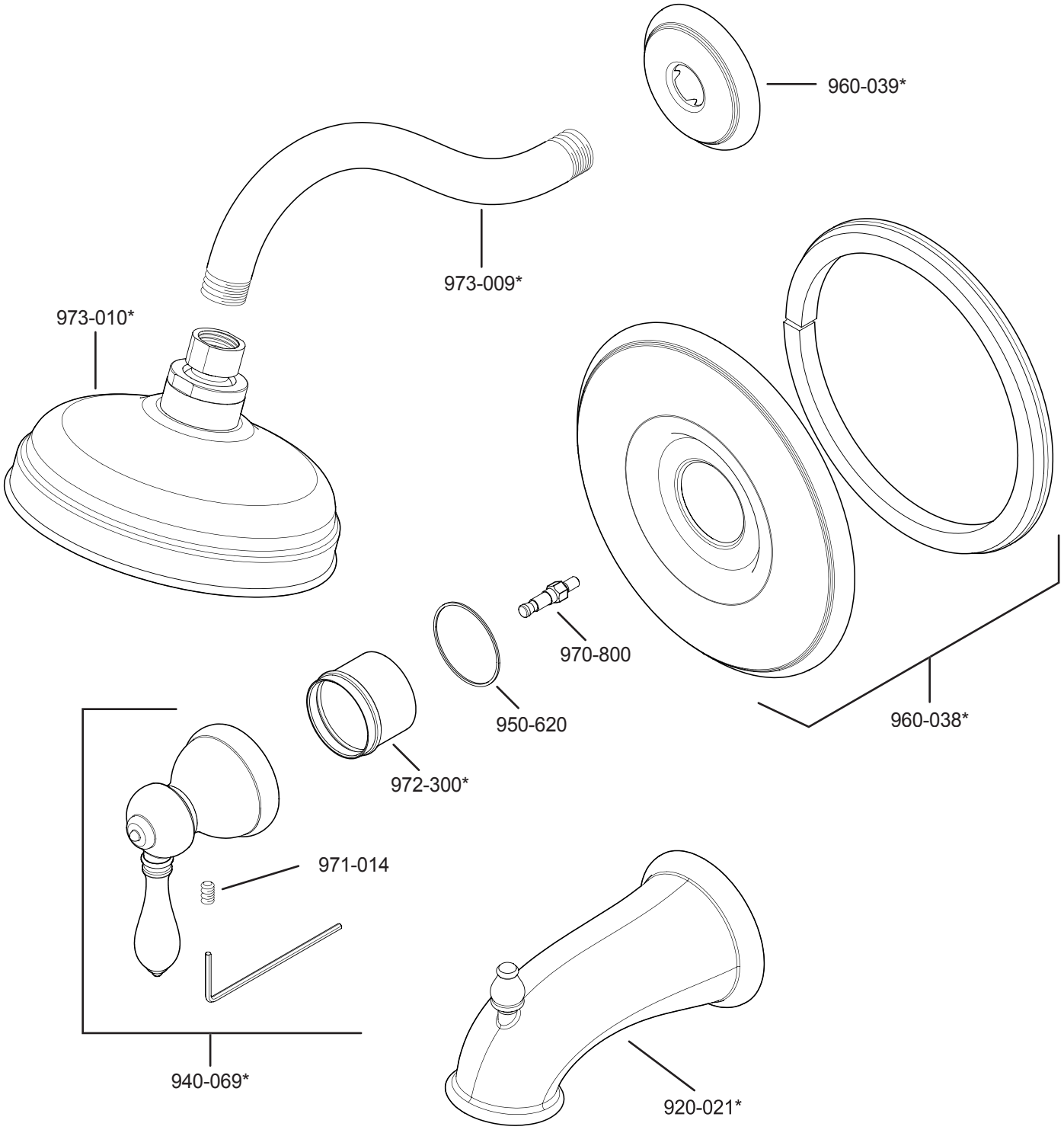

	English	Español	Français
*	Letter Designates Finish	La Letra Indica el Terminado	La Lettre Designe La Fini
A	Polished Chrome	Cromo Pulido	Chrome Poli
J	Brushed Nickel PVD	Niquel Cepillado PVD	Nickel Brosse PVD
Z	Oil Rubbed Bronze	Bronce Frotado Con Aceite	Bronze Frotado

DEPARTMENTAL

Price Pfister®
Pf Pfreshest Ideas in Pfaucets.
19701 DaVinci
Lake Forest, CA 92610
Phone: 1-800-Pfaucet
www.pricepfister.com
A BLACK&DECKER COMPANY