Price Pfister®

Pf Pfreshest Ideas in Pfaucets.

49-N Series

Serie 49-N

Série 49-N

CONTEMPRA®

Lavatory Widespread Faucet

Grifo Extenso Para Baño

Robinet Sans Applique Pour Lavabo

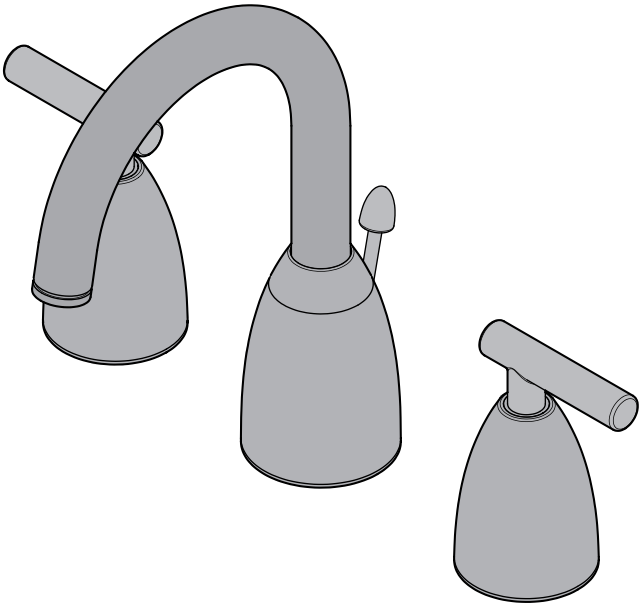

10-12-04 EO6773E

29165-0300

Copyright © 2004, Price Pfister, Inc.

A BLACK&DECKER COMPANY

ENGLISH

Thank you for purchasing this Price Pfister bathroom faucet. All Price Pfister products are carefully engineered, and factory tested to provide long trouble-free use under normal conditions. This bathroom faucet is easy to install using basic tools and our easy to follow illustrated instructions. If you have any questions regarding your bathroom faucet installation call 1-800-Pfaucet (1-800-732-8238).

1 BEFORE PROCEEDING

WARNING: Read all the instructions completely before proceeding. Price Pfister recommends calling a professional if you are uncertain about installing this product!

This product should be installed in accordance with all local and state plumbing and building codes.

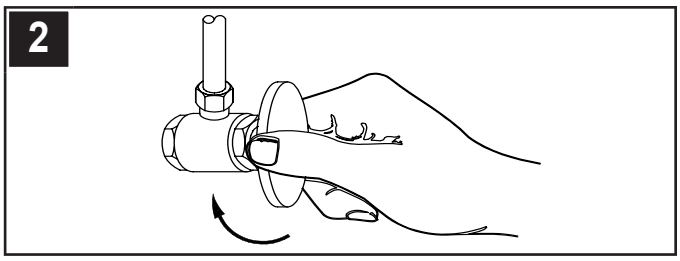

2 SHUT OFF WATER SUPPLY

Locate water supply inlets and shut off the water supply valves. These are usually found under the sink or near the water meter. If you are replacing an existing faucet, remove the faucet from the sink and clean the sink surface thoroughly.

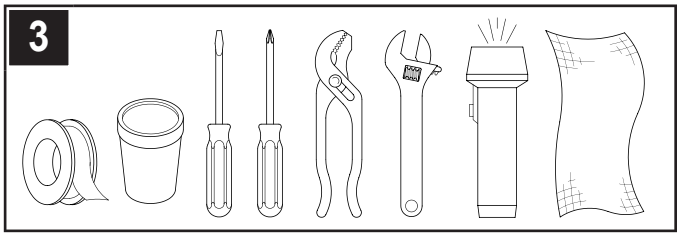

3 TOOLS RECOMMENDED

- PTFE plumber's tape or thread sealant
- Plumber's putty
- Slotted screwdriver
- Phillips head screwdriver
- Pliers
- Adjustable wrench
- Flashlight
- Cloth

Your installation may require new supply lines and/or shut-off valves or other additional tools.

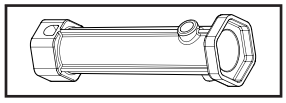

This product comes with an installation tool used for securing the valve body assemblies.

INSTALLATION STEPS

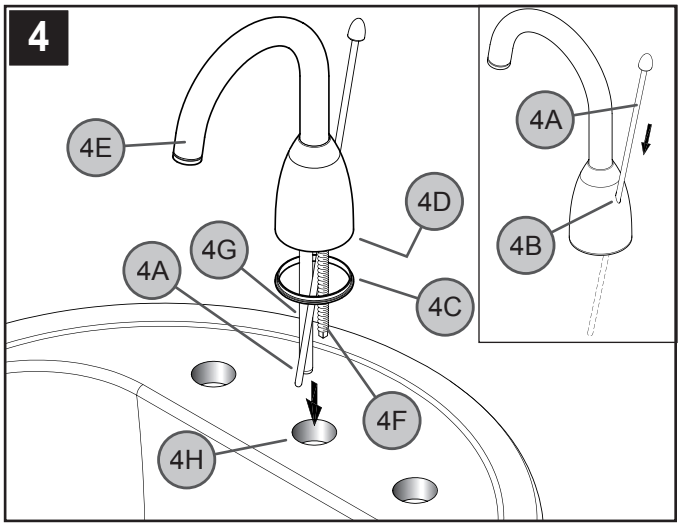

4 SPOUT INSTALLATION

Insert Lift Rod (*4A*) into hole at the back of Spout (*4B*). Place Plastic Seal Ring (*4C*) against the bottom of Spout Body (*4D*). With Spout (*4E*) facing forward, carefully install the Lift Rod (4A), Shank (*4F*) and receiving Tube (*4G*) through the center hole of sink (*4H*).

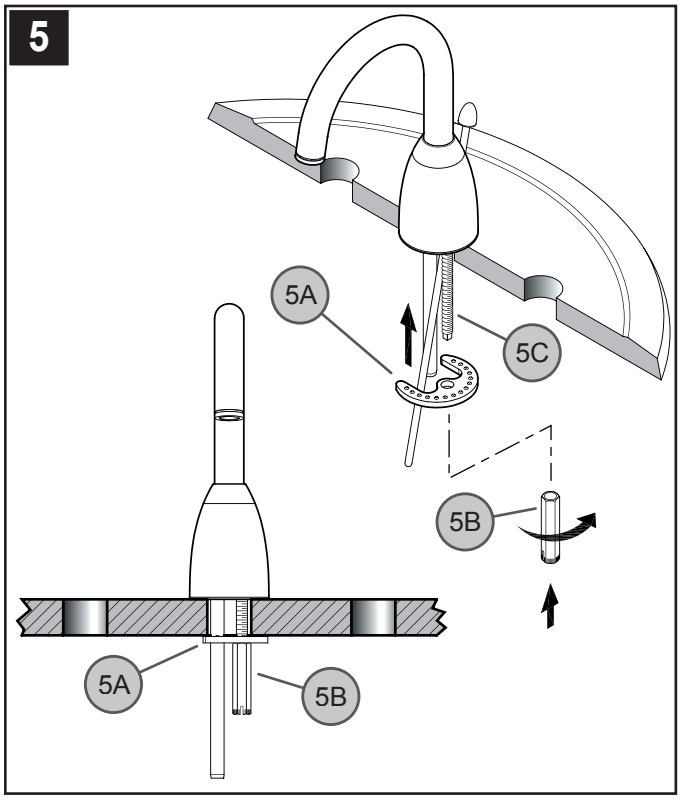

5 SECURING FAUCET

From underneath sink, secure the faucet by placing the Metal Washer (*5A*) and the Long Nut (*5B*) ($^{7}/_{16}$ hex.) onto the Mounting Post (*5C*). Make sure that the bumps on the Metal Washer (*5A*) are facing up. Tighten using a flathead screwdriver or an adjustable wrench until the faucet is firmly connected to the sink. **Do not over tighten!**

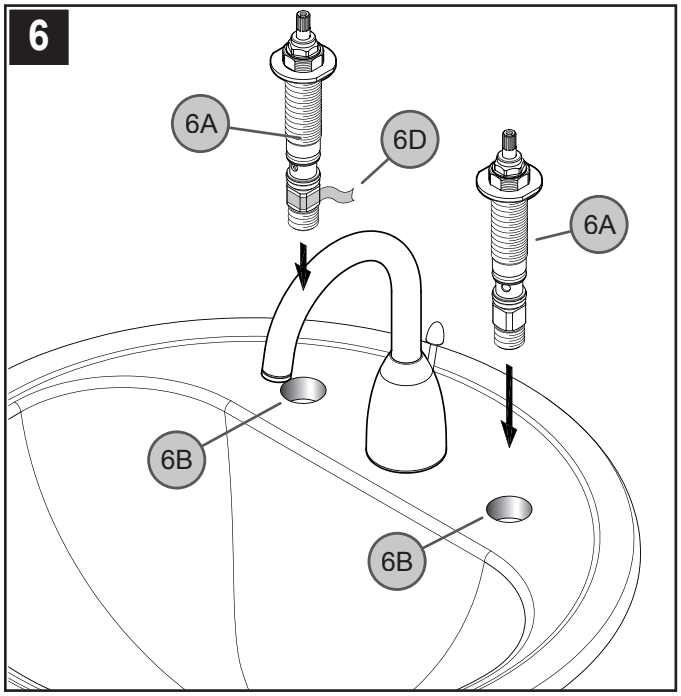

6 VALVE BODY ATTACHMENT

From above sink, insert Valve Body (*6A*) through Mounting Holes (*6B*). The HOT valve, labeled with Red Tag (*6D*), should be positioned to the left side of the spout.

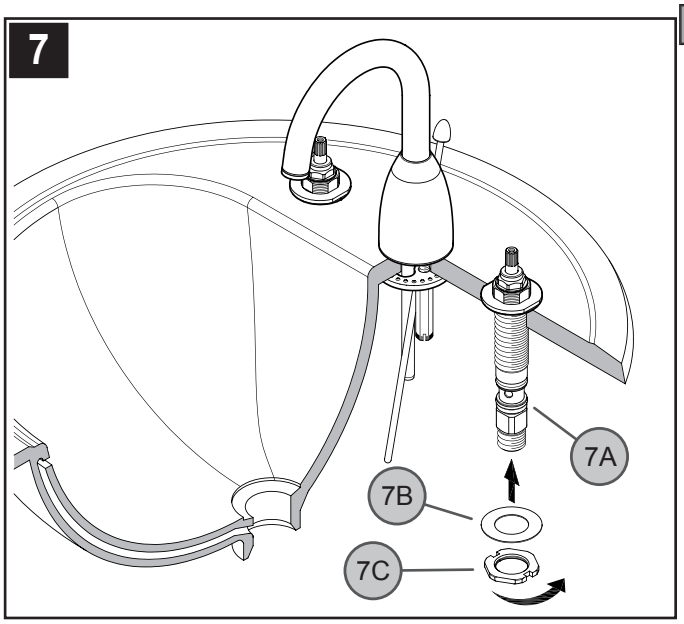

7 VALVE BODY INSTALLATION

From underneath sink, place Mounting Washer (*7B*) onto Valve Shank (*7A*) and tighten with Mounting Nut (*7C*).

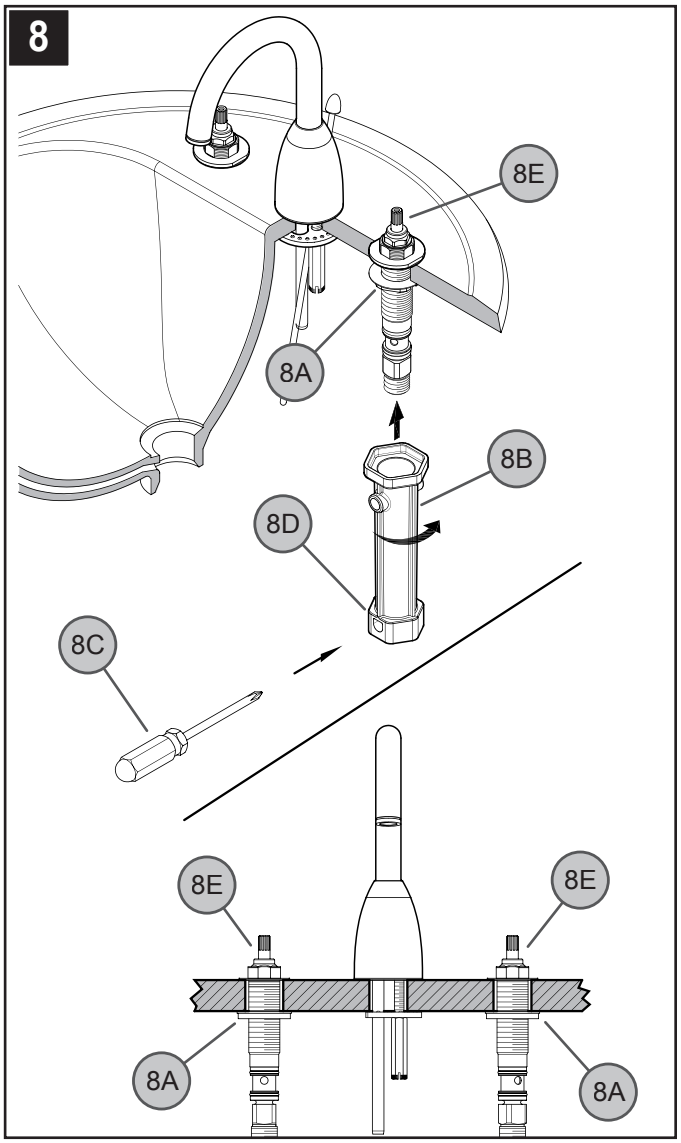

8 SECURING VALVE BODY

From underneath, tighten Mounting Nut (*8A*) by using Installation Tool (*8B*). For better leverage, use a Screwdriver (*8C*), insert it through Hole (*8D*) and tighten the Mounting Nut (*8A*) until Valve (*8E*) is firmly secured to sink.

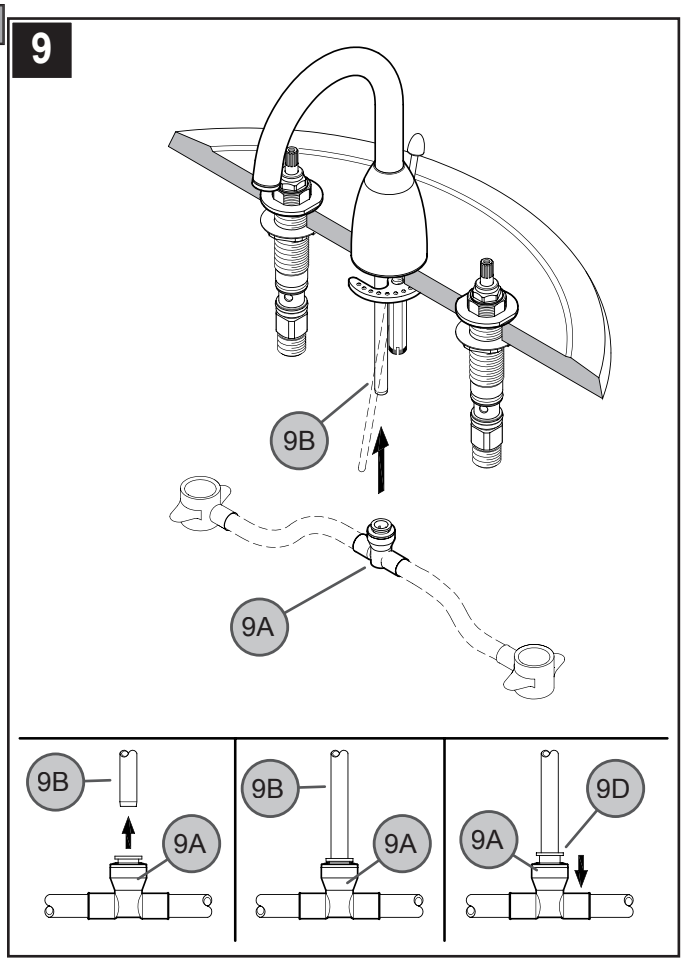

9 HOSE CONNECTION TO SPOUT BODY

From underneath sink, push the Center Connector (*9A*) onto receiving Tube (*9B*), until unable to push any further. Pull down on the quick connect housing (*9A*). If the housing and the Inner Collet (*9D*) separate slightly but do not pull off the receiving Tube (*9B*), the connection is secure.

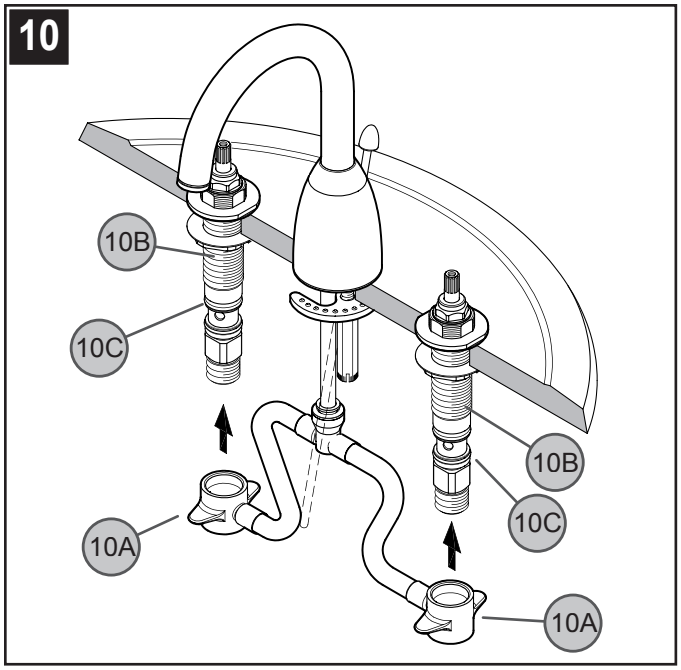

10 HOSE CONNECTION TO VALVE BODY

Slide the End Connectors (*10A*) onto the Valve Bodies (*10B*). Push the End Connectors (*10A*) all the way up until completely seated. Be careful not to damage O-Rings (*10C*).

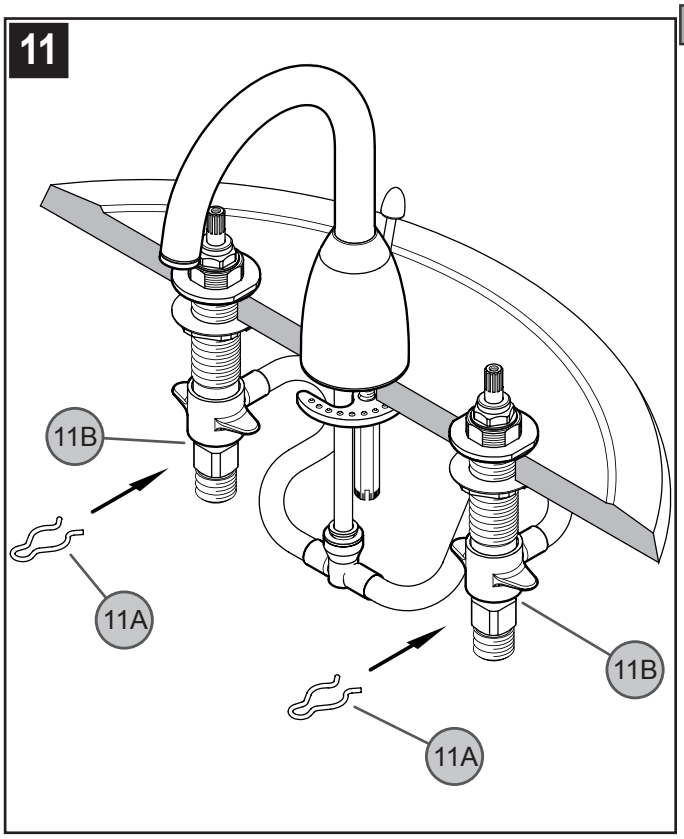

11 SECURING HOSE CONNECTIONS
Place Clips (*11A*) onto End Bodies (*11B*).

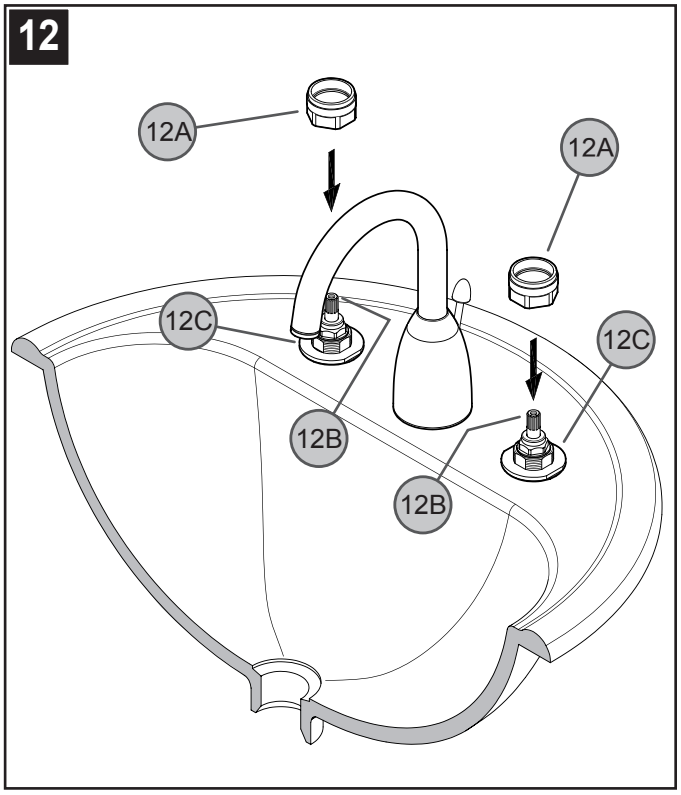

12 VALVE ADAPTER ATTACHMENT
Thread Valve Adapters (*12A*) onto the Valve Stems (*12B*) and tighten so that the Valve Adapters (*12A*) sit on the surface of the Valve Body Washers (*12C*).

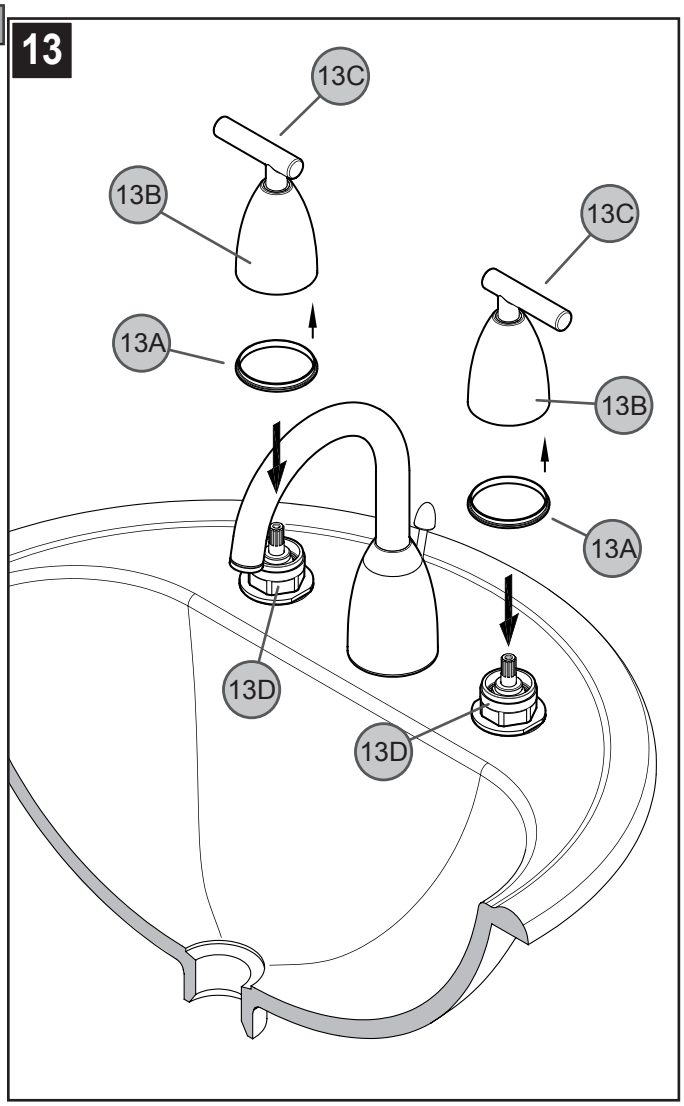

13 HANDLE ATTACHMENT
Place Plastic Seal Rings (*13A*) against the bottom of Handle Hubs (*13B*). Connect Handles (*13C*) onto Valve Adapters (*13D*).

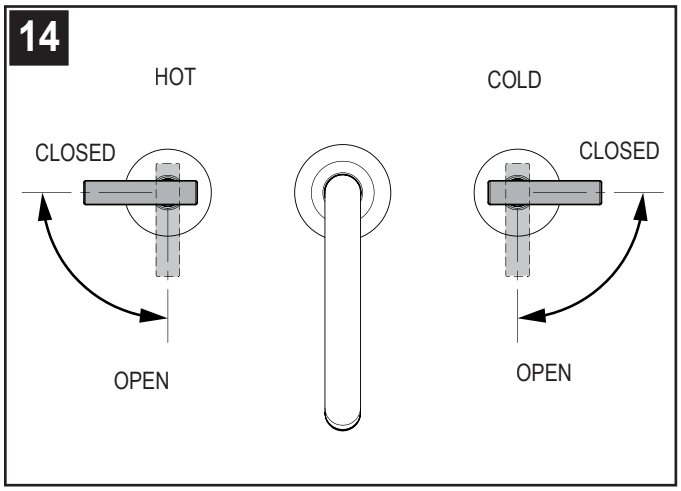

14 VALVE FUNCTION
Valve function – COLD valve: close-counterclockwise, open-clockwise; HOT valve: close-clockwise, open-counterclockwise.

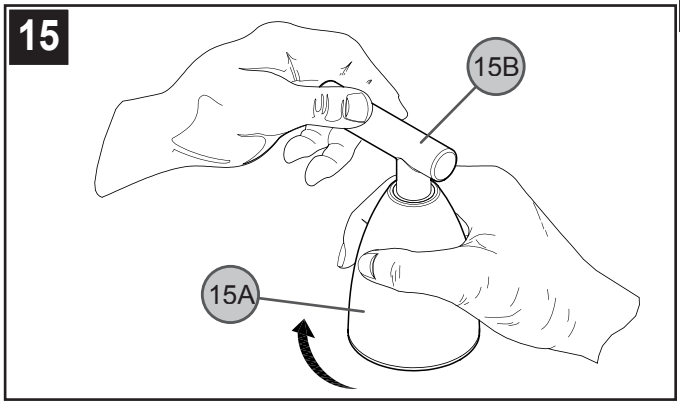

15 SECURING HANDLES

Be sure Valves and Levers are in the "OFF" position. Secure handles by holding the Lever (*15B*) in place and tighten the Hubs (*15A*) by rotating them in a clockwise direction. To remove handles, rotate Hubs (*15A*) in a counterclockwise direction.

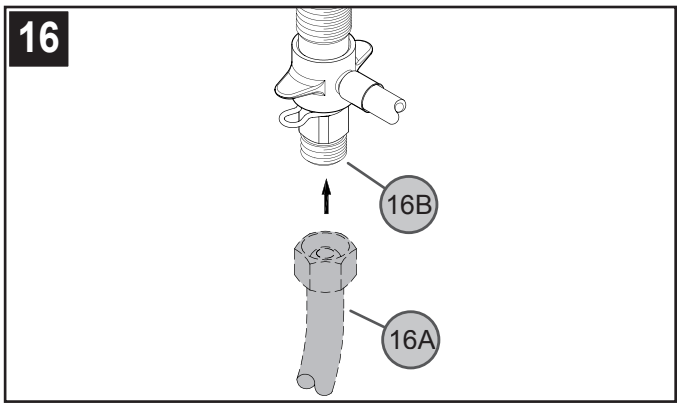

16 WATER SUPPLY CONNECTIONS

Connect water Supply Lines (*16A*) to Faucet Inlets (*16B*). (Supply lines and fittings are not included.)

POP-UP DRAIN BODY INSTALLATION STEPS

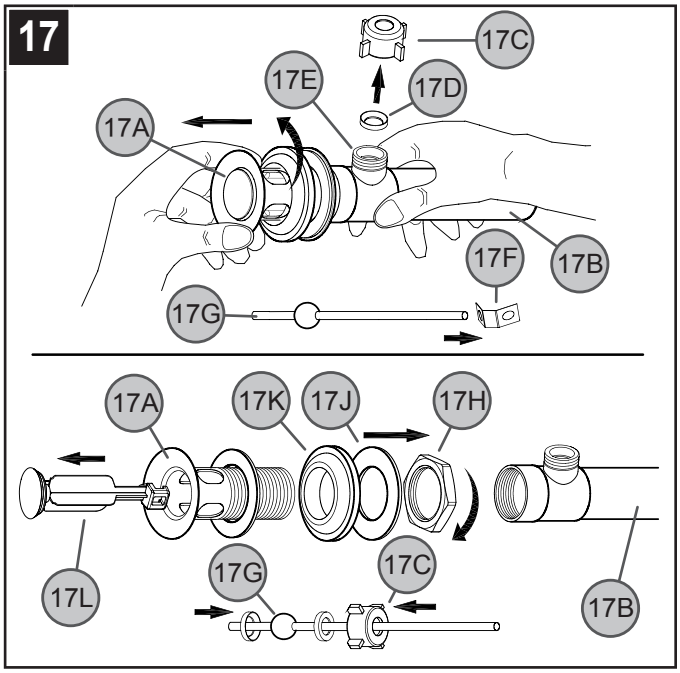

17 POP-UP PREPARATION

Remove Flange (*17A*) and unscrew Nut (*17C*) from the Pop-Up Drain Body (*17B*). Retain the Packing Ring (*17D*) inside the Ball Rod Opening (*17E*). Take off the Spring Clip (*17F*) from the Ball Rod (*17G*). Place the Nut (*17C*) on the Ball Rod (*17G*). Remove Locknut (*17H*), Friction Washer (*17J*), Rubber Washer (*17K*) and Stopper (*17L*) from Flange (*17A*).

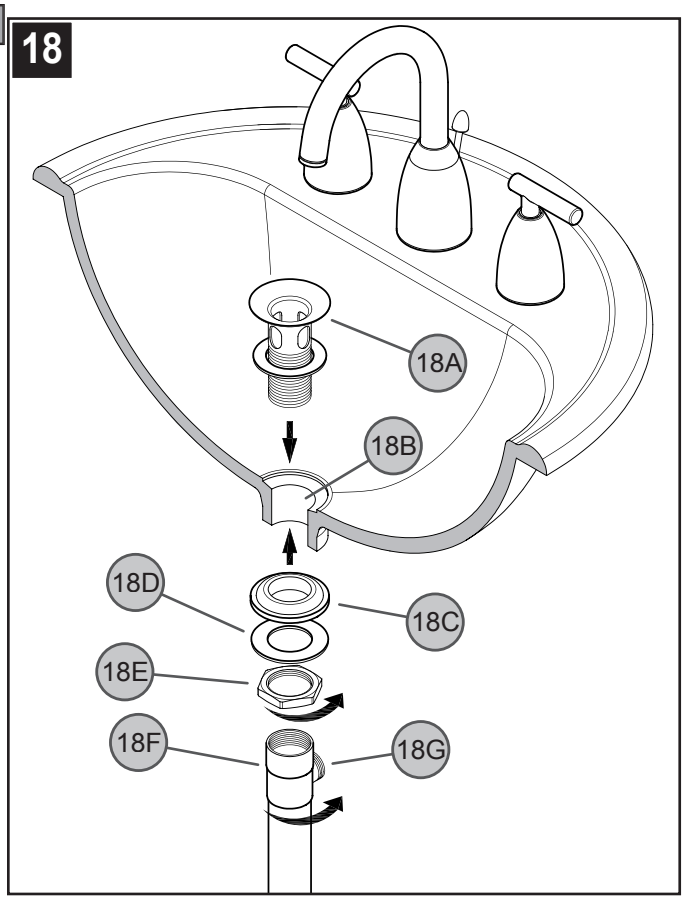

18 POP-UP INSTALLATION

Apply a small bead of putty underneath the Flange (*18A*) and place a ring of putty around Drain Opening (*18B*) of sink. Use PTFE plumber's tape to all threaded fittings according to manufacturer's instructions. Insert Flange (*18A*) into Drain Opening (*18B*). From underneath, insert Rubber Washer (*18C*) and Friction Washer (*18D*) through the bottom of Flange (*18A*). Thread Locknut (*18E*) until Rubber Washer (*18C*) seats securely inside Drain Opening (*18B*). Thread Drain Body (*18F*) to bottom of Flange (*18A*). Hand tighten and adjust the Drain Body so that the Ball Rod Opening (*18G*) faces the rear. Wrench tighten Locknut (*18E*) and wipe excess putty.

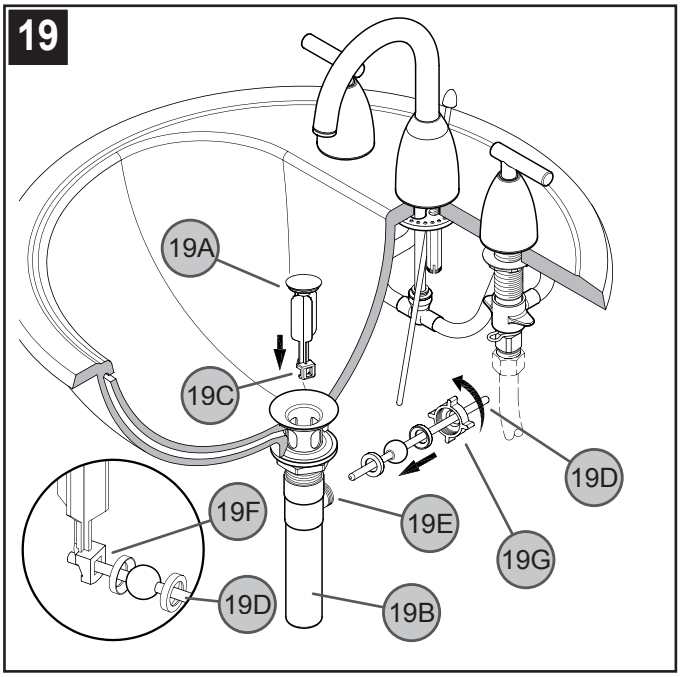

18 BALLROD ADJUSTMENT

Drop the Stopper (*19A*) into Drain Body (*19B*) from the top with the Off-Set (*19C*) facing rear. From below, insert the Ball Rod (*19D*) into the Ball Rod Opening (*19E*) through the Stopper Hole (*19F*) and secure with Nut (*19G*).

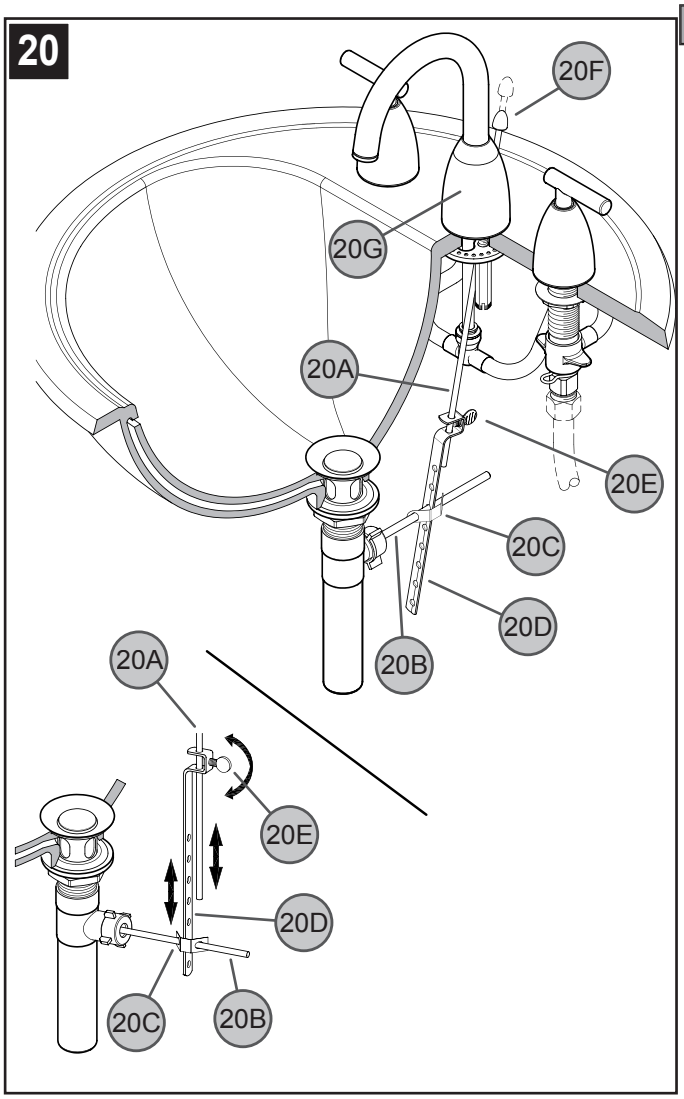

20 POP-UP ROD LINKAGE & ADJUSTMENT

Place one end of Spring Clip (*20C*) on end of Ball Rod (*20B*). Insert Ball Rod (*20B*) across and through hole in Pop-Up Strap (*20D*). Secure other end of Spring Clip (*20C*). Insert bottom of Lift Rod (*20A*) into hole at top of Pop-Up Strap (*20D*). Tighten with Thumb Screw (*20E*). Adjust Lift Rod (*20A*) height by using the Thumb Screw (*20E*) on the Strap (*20D*) or by adjusting the hole in which Ball Rod (*20B*) goes through the Pop-Up Strap (*20D*). Be sure to leave enough space between Lift Rod Knob (*20F*) and Faucet (*20G*) when Lift Rod is down.

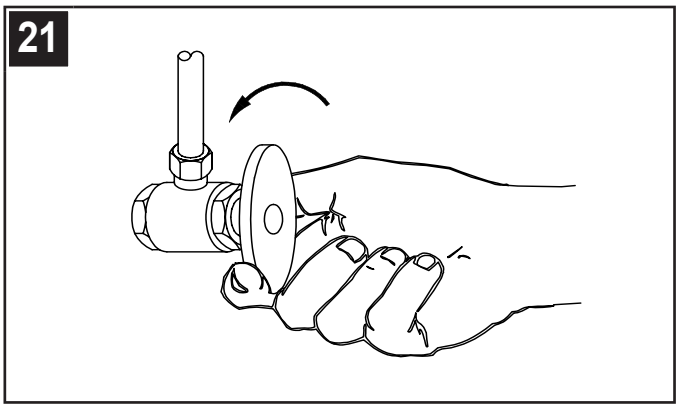

21 UNIT START UP

Turn on hot and cold water supplies, and check for leaks above and below the sink.

MAINTENANCE & CARE

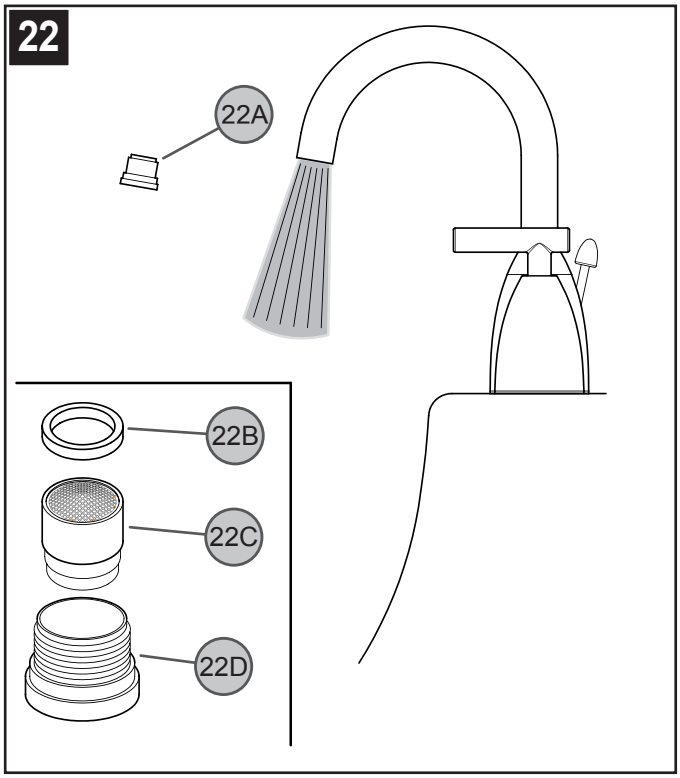

22 FLUSHING & AERATOR CLEANING

To prevent damage to the internal parts of your faucet from debris that may have collected in the water lines, please follow these steps:

1. Turn on water supply valves.
2. After connections have been made, remove Aerator (*22A*) and turn Handles to the full "ON" position.
3. Check for leaks, retighten where necessary, and let lines flush for one minute without moving faucet handles. This will remove debris from lines which can damage internal parts of faucet and cause leaks.
4. After flushing, turn off handles and replace Aerator (*22A*).

To clean aerator, lift out Washer (*22B*) and Insert (*22C*) from Aerator Head (*22D*). Rinse parts and replace.

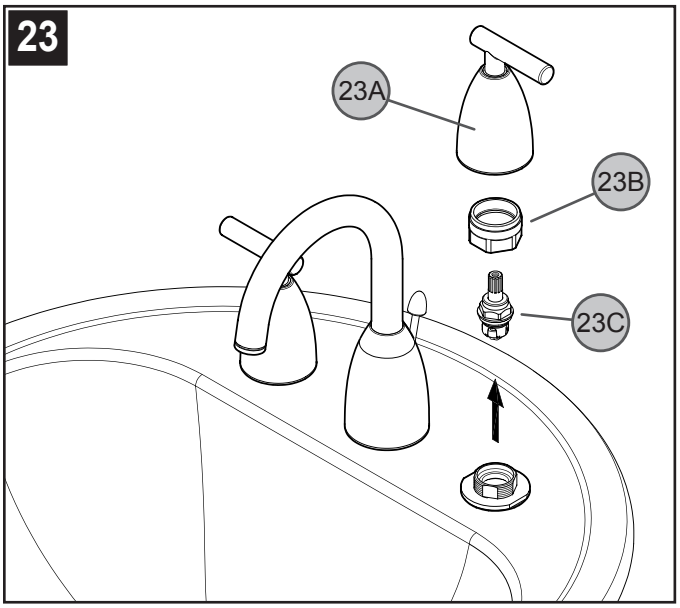

23 VALVE CARTRIDGE MAINTENANCE

Turn off water supplies and relieve pressure before working on your faucet *(see step 2)*. Remove Handles (*23A*) *(see step 15)*, Valve Adapter (*23B*) *(see step 12)*, unscrew Cartridge Assembly (*23C*) and inspect. Replace parts as necessary.

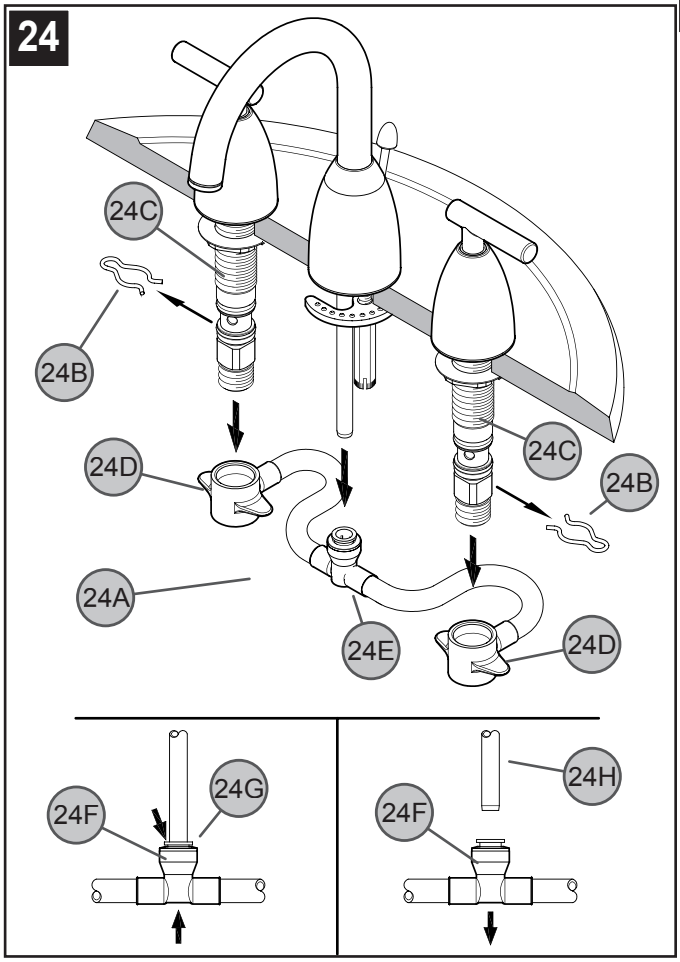

24 HOSE CONNECTION MAINTENANCE

To detach Hose Assembly (*24A*), remove Clips (*24B*) from End Valve (*24C*) and pull the End Connectors (*24D*) from End Valves (*24C*). Remove Center Connector (*24E*) by pushing up on Quick Connect Housing (*24F*). Holding gray plastic Collet (*24G*) in place, pull down on Quick Connect Housing (*24F*) until Tube (*24H*) is free.

CAUTION: Maintenance

DISASSEMBLY

1. Replacement parts may be available at the store where you purchased your faucet.
2. When replacement parts are not available, please write or call Price Pfister Consumer Service.
3. **Always turn off water and relieve pressure before working on your faucet.**

NOTE: Trim Care

Cleaning Instructions:

For all handles and decorative finishes, use only a soft damp cloth to clean and shine. Use of polish, detergents, abrasive cleaners, organic solvents, or acid may cause damage. **Use of other than a soft damp cloth will nullify our warranty!**

Special Trim:

Trim products which contain porcelain or other similar substances are not acceptable for public areas or commercial use. Installation of said trim is at user's risk!

1-800-PFAUCET (1-800-732-8238)

For Toll-Free Pfaucet information call
1-800-PFAUCET (1-800-732-8238)
or visit www.pricepfister.com

- Installation Support
- Care and Warranty Information

Price Pfister®
Pf Pfreshest Ideas in Pfaucets.

CONTEMPRA®

49-N Series
Serie 49-N
Série 49-N

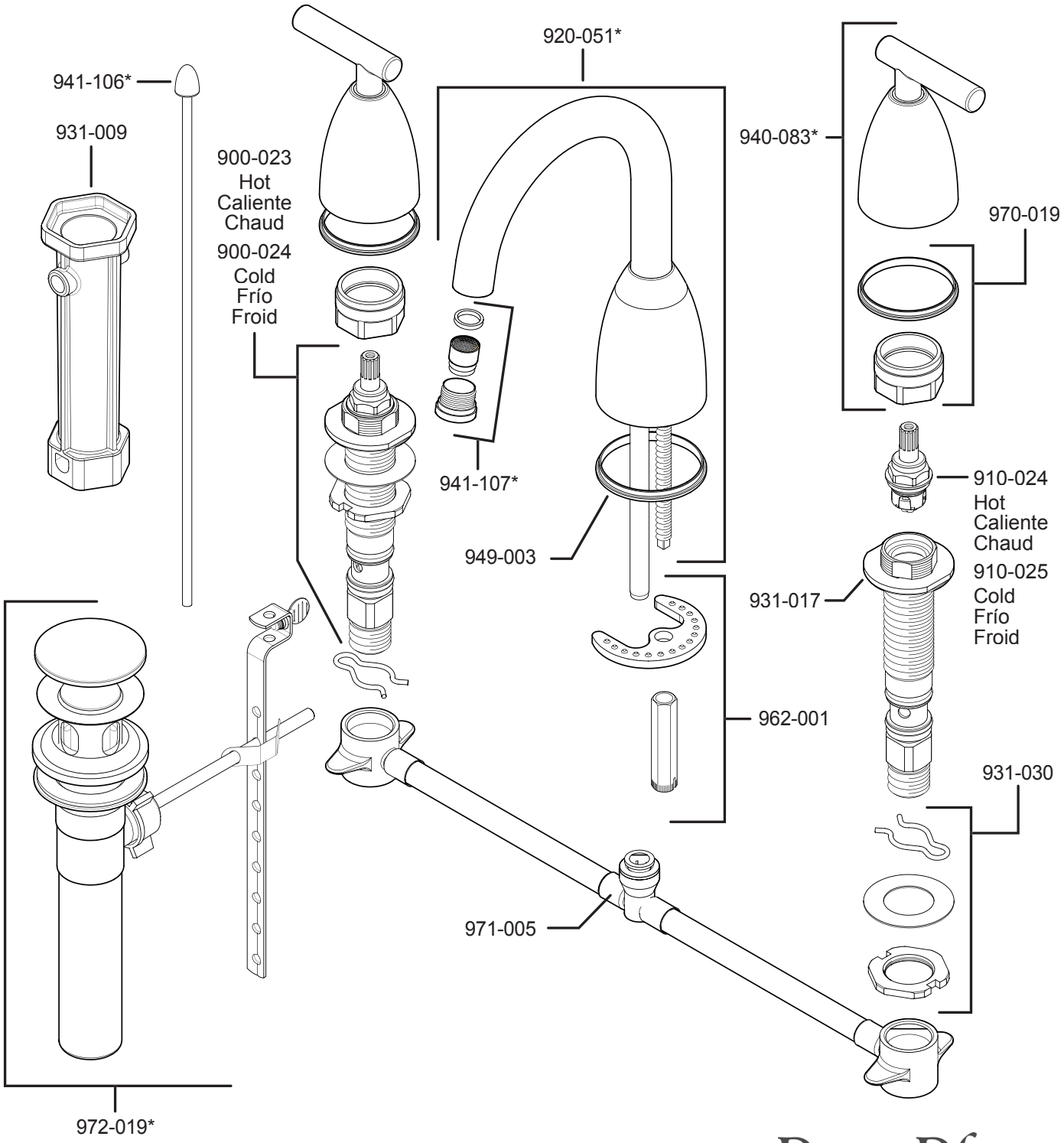

	English	Español	Français
*	Letter Designates Finish	La Letra Indica el Terminado	La Lettre Designe La Fini
A	Polished Chrome	Cromo Pulido	Chrome Poli
J	Brushed Nickel PVD	Niquel Cepillado PVD	Nickel Brosse PVD

DEPARTMENTAL

Price Pfister®
Pf Pfreshest Ideas in Pfaucets.
19701 DaVinci
Lake Forest, CA 92610
Phone: 1-800-Pfaucet
www.pricepfister.com
A BLACK&DECKER COMPANY