SPS10 Gas

Multi-Use Surface Preparator

User Manual

SMITH
MANUFACTURING
Cutters / Removers / Parts / Support

1-800-653-9311

www.SmithMfg.com

Phone: 954-941-9744 • Fax: 954-545-0348

INDEX

Page	Contents
2	Index / Introduction
3	Safety Guidelines
4	Your SPS10 Surface Preparator
5	Handle Adjustment Instructions
6	Machine Start-Up
7	Substrate Removal
8	Storage, Ordering, and Warranty Claims
9	Troubleshooting
10	Maintenance Check List
11	Drum Replacement
12-14	Belt Replacement and Alignment
15-16	Bearing Replacement
17-24	Optional Equipment
25-26	Drum Options
27-28	Maintenance Log
29	Limited Equipment Warranty
30	Warranty Activation

INTRODUCTION

Congratulations on purchasing the SPS10™ Surface Preparator from SMITH Mfg. Company.

Your machine will:
• Clean surfaces impacted by grease, oil, plastics, tars, resins, tile adhesives, ice and more
• Plane or mill asphalt and concrete surfaces
• Remove high spots in curbs and gutters
• Eliminate trip-hazards on concrete sidewalks
• Mill areas for rumble strips
• Clean out cracks and joints
• Create anti-slip patterns in walkways and barns
• Prepare surfaces for new coating applications
• Permanently remove all road and surface coatings to include:
epoxy, urethane, thermoplastic, paint, glue-backed tapes and more...

BEFORE START-UP, READ THIS..

Please read all operating instructions, including the provided engine manual and be completely familiar with your equipment before operating. When in doubt, please contact SMITH Manufacturing Customer Service for operational details. This Owner's Manual will guide you through the removal process, from start to finish, and show you how to care for your machine.

UNCRATING EQUIPMENT

When you uncrate your equipment, make certain that the machine has not been damaged and that all fasteners and guards are properly tightened.

Your machine may not have been shipped assembled with cutters and other accessories. Assembly may be required.

REMEMBER: Only authorized, experienced and properly trained personnel should operate this equipment. Operating personnel should practice safety at all times and wear protective gear (gloves, goggles, safety vests, ear plugs, steel-toe shoes, etc.)

SAFETY GUIDELINES

Incorrect use of the surface preparator can result in property damage, personal injury, or death. Be sure to read and follow all directions and precautions as outlined in this manual.

• Always wear protective equipment, including ear protection and goggles.
• Never wear baggy or loose fitting clothing that can be caught on controls or moving parts.
• The surface preparator can emit flying particles and debris during operation. Never operate the machine near bystanders, animals or children.
• Check fluid levels and get acquainted with the controls, engine kill switch and other safety controls (pg. 5).
• Do not operate the machine in an explosive atmosphere, near combustible materials, or when gas fumes may not be properly dispersed.
• Repair any fuel leaks immediately and remove accumulated dust frequently from the air filter system.
• Never leave the machine unattended when running, and you must hold onto the handle with two hands when the cutter drum is engaged.
• Avoid contact with the muffler when the engine is hot, as it may cause severe burns.
• When using a vacuum system, avoid hose contact with the muffler.
• Ensure that all guards are in place before the machine is operated, since rotating and moving parts will cause injury upon contact.
• Make sure that the engine is shut down and the spark plug is disconnected before servicing.

YOUR SPS10™ SURFACE PREPARATOR

Please take time to familiarize yourself with the SPS10™'s controls, as well as some of the features of your new machine.

Read the engine manual before preparing the engine for starting.

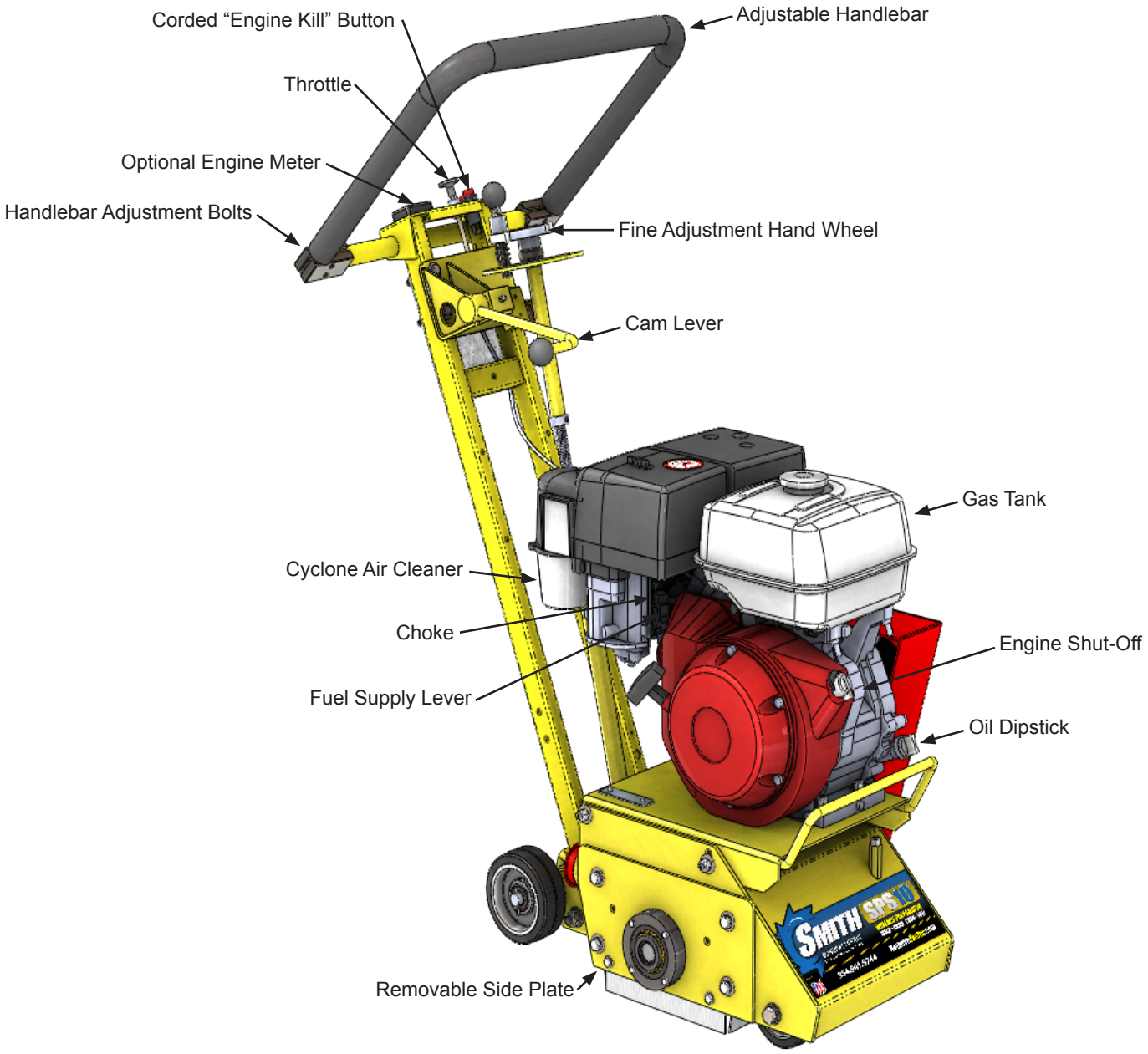

HANDLE BAR ADJUSTMENT

The handlebars are equipped with a high-density vibration suppression material to minimize operator fatigue and increase comfort level when operating equipment.

To adjust the handlebars to a new position for different height operators please follow these steps:

- Using a 9/16” (14mm) wrench or socket, loosen the bolts on both sides of the handlebars until the handlebar moves freely. Take care not to over-loosen the bolts to keep them from falling out.

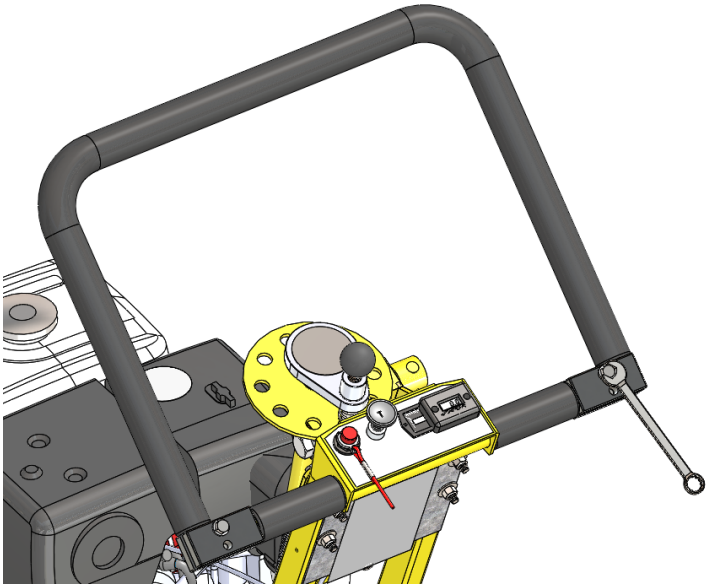

- Stand behind the machine and lightly tap the handlebar to the desired position

- Re-tighten the bolts to lock the handlebars in the new position.

Never operate with handlebars loose.
The bolts must be fastened tightly assuring the handle is locked into position.

MACHINE START-UP

Do not start machine while drum is in contact with the ground. Doing so can cause the operator to lose control of the machine, resulting in property damage and/or personal injury.

NOTE: Do not attempt to raise or lower the cam lever by force. If it does not move effortlessly, raise or lower the hand wheel until the cam lever can be adjusted. Open the fuel cock on the carburator and then place the throttle lever at the "Fast Idle" position. Start the engine, open choke slightly to prevent flooding. Move throttle control to open or run position when engine is warmed up. Increase throttle to maximum operating position (approx. 2800RPM) and close choke. Before substrate removal, test run the drum with cutters not touching the surface. If there is excessive vibration, you need to re-balance the cutter set-up, check bearing condition, and/or make sure that the drive shaft is secured.

Corded "Engine Kill" Button (not available on electric motor): In the event of a malfunction or an accident (such as the machine operator falling or losing footing), the SPS10 is equipped with a corded "Engine Kill" Button. Attach the end of the cord to the operator's belt or wrist, and snap the clip into place on the stop switch by raising the top of the Engine Kill Button and inserting the clip into the gap. If the operator becomes distanced too far from the machine, the cord will detach from the stop switch, and the machine will stop running.

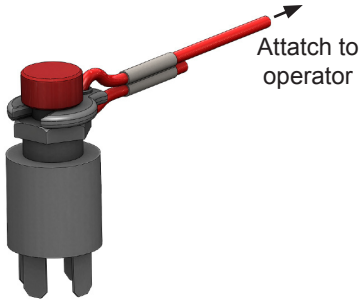

***NOTE: the Engine will not start without the Corded Engine Kill's clip securely in place.**

CAUTION: The machine will still move with the engine off.

IF THE ENGINE DOES NOT START

1) Check Engine for proper gas and oil levels (refer to Engine manual)
2) Check spark plug. Make sure the socket areas are clean and clear of debris, and that the proper gap is set. (Replace if needed).
3) Check Brown Electrical clip hanging on the front of the engine and ensure that the electrical wires are making contact within the clip.
4) Turn the On/Off switch, on the front of the Engine, to "On".
5) Check Corded Engine Kill Button's Connections:
   a) Make sure the Corded Safety Stop "C" Connector is clipped properly.
   b) Try switching the connection to the opposite post (From letter "C" to letter "M", for example).
6) Engine may have tilted backwards. If so, allow oil to drain after removing spark plug and pulling starter cord several times.

***Engine repair and engine warranty issues are handled directly by your local engine service center.**

SUBSTRATE REMOVAL

Warning: Should you desire to tilt the machine, always tilt forward. Tilting the machine backwards at any time will flood the spark plug with oil and may cause damage to your engine!

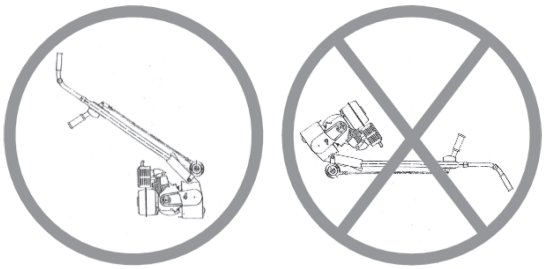

RIGHT **WRONG**

Adjust the height of the cutter drum with the Hand Wheel and Cam Lever. (Turn the hand wheel to raise the cutter drum off of the substrate. Lower or raise the cam lever to engage or disengage the drum after setting the proper cutter depth.)

Set the depth of cut to allow the cutters to go through only the materials to be removed. Make certain that the drum is positioned to where only the cutters strike the surface, and that the drum assembly never comes into contact with the substrate. **The cutter tips alone should strike the surface** (1/8" to 1/4" maximum depth per removal pass on new cutters).

The drum will not withstand substrate contact. **Contacting the removal surface too deeply will cause premature wear to cutters, shafts, drum and other components!**

Too much downward pressure only has negative results. Try to remove materials in several passes rather than one, deep pass. Several tests will show the best, most appropriate cutter impact. Use a forward, backward and/or circular pattern to achieve your desired finish.

NOTE: Only use a forward motion when the CM2150 or CM2550 carbide milling cutters are used.

TIP: Positioning the machine over the surface in many directions, as well as dialing the hand wheel up or down can help create desirable surface patterns.
After several hours of practice, the operator will become comfortable and should be able to remove materials faster with enhanced results.

When the job is completed, or the operator wants to cease work, stop the engine by first lifting the drum above the substrate using the hand-wheel and/or the cam lever. Stop the machine only at the engine. Then close the fuel cock to shut off the fuel supply.

The drum assembly must be removed daily and inspected for drum wear, hole elongation and possible weld separation. Replace the cutter shafts and drum bushings every 40 hours, or prior to any drum wear. If the drum's center holes are elongated, order another SMITH cutter drum.

STORAGE

Shut off fuel valve and remove all fuel or add fuel stabilizer. Start engine and run until it stalls. Remove spark plug and pour two ounces of motor oil into cylinder and slowly crank the engine by hand to distribute oil to prevent rust during storage.Replace spark plug and store machine upright in a cool, dry, and well-ventilated area.

ORDERING

To ensure product safety and reliability, and to maintain your warranty, always use genuine replacement cutters and parts from SMITH when making repairs to the equipment.

When ordering please specify the model and serial number of the machine. In addition, give a part number, description, and quantity as listed on your parts list.

If you have any questions about the operation of your machine or would like to order replacement parts, contact your SMITH Manufacturing representative directly.
Contact 1-800-653-9311 (954-941-9744) for information.
Visit our website at
www.smithmfg.com

WARRANTY CLAIMS

The manufacturer reserves the right to change or improve the machine design without assuming any obligation to update any products previously manufactured before this manual. It is the customer's responibility to complete the warranty card and mail it to the seller within 10 days from date of purchase. If a failure occurs during the warranty period, the customer must contact the seller to determine the appropriate action.
Any and all transportation charges are to be borne by the purchaser.

TROUBLESHOOTING

PROBLEM

- **Possible Reason(s)/Solution(s)**

CUTTERS WEARING UNEVENLY/PREMATURELY

- **Drum is too low**
- **Incorrect set-up**
- **Material Build-up**
- **Cutters too tightly loaded**
- **Wrong cutters for application**

CUTTERS SHAFT BREAKAGE UNEVENLY/PREMATURELY

- **Drum is too low**
- **End plates or bushings worn**
- **Shafts worn**
- **Wrong cutter set-up**
- **Over 40 hours service-life**

DRUM WEARING PREMATURELY OR CRACKING

- **Drum hitting ground**
- **Shafts and bushings not replaced within 40 hours**

EXCESS VIBRATION

- **Bearing worn**
- **Hex bushing worn**
- **Drive shaft worn**
- **Improper cutter set-up**
- **Drum contacting ground**
- **Wheels worn out**

MACHINE JUMPS ERRATICALLY

- **Drum hitting ground**
- **RPM is too low**
- **Surface is severely uneven**

DRIVE BELT WEARING PREMATURELY

- **Pulley is misaligned**
- **Wrong belt**
- **Drum is contacting the surface**

CAM LEVER WILL NOT RAISE/LOWER

- **Raise or lower hand-wheel**

HAND-WHEEL WON'T TURN

- **Clean & grease threads**
- **Linkage may be bent**
- **Hand-wheel may be out of position**

For any other problems or questions, please contact your local representative
or
SMITH Mfg today at 800-653-9311
or
(954) 941-9744.

***Engine repair and engine warranty issues are handled directly by your local engine service center.**

MAINTENANCE CHECK LIST

Note: Make sure the ignition is in the **OFF** position, and the spark plug is disconnected before servicing

• Maintain proper engine oil and crankcase levels.
Change every 25-50 hours
(see Honda manual).

• Clean spark plugs regularly, and set the proper gap.

• Wash the air cleaner element in a non oil-based solvent, then squeeze out residue. Allow filter to dry before reinstalling in cleaner.

• Keep a coating of grease on the drive shaft and threads for easy installation or removal, and for longer hex bushing life.

• Grease the tilt lever, lower linkage. (Clean dirt off of fittings before greasing.)

• Check all fasteners and re-tighten, since the machine will vibrate the fasteners loose if they are not secured. Use locktight.

This includes:
A) Both set screws (P/N 1010051) aligned on hex shaft (P/N: 1065037) are torqued tight.

B) All three hex Bolts (P/N: 1010023) on drum retaining plate (P/N: 1065054). Must be aligned and tight.

• Check the Drive belt for wear, and adjust (tighten), or replace as required.

• Check that the pulleys are aligned properly to ensure the Drive belt is running true.

• Check wheel for wear and that they are rotating properly, replace if worn. Clean wheels of material build-up.

• The inside housing must be clean, and remove any build-up from inside the cage so cutters and drum rotate freely.

• Inspect and change drum bushings and shafts every 40 hours, or when worn.

DRUM REPLACEMENT

Normal use will require periodic drum inspection and may necessitate drum replacement.

Time of replacement will vary according to usage and load factors.

Replacement is easy and requires a few hand tools.

1. 9/16" socket or wrench

2. Rubber mallet

Before beginning servicing on any gasoline-powered unit, DISCONNECT SPARK PLUG WIRE!

1. Raise the cam lever to the up position so the cutter drum is off the ground.

2. Remove the four hex head cap screws from the sideplate using the 9/16" socket or wrench.

3. Remove the sideplate (this may require the rubber mallet to break it loose)

4. Slide out drum assembly. (use precaution as it is HEAVY)

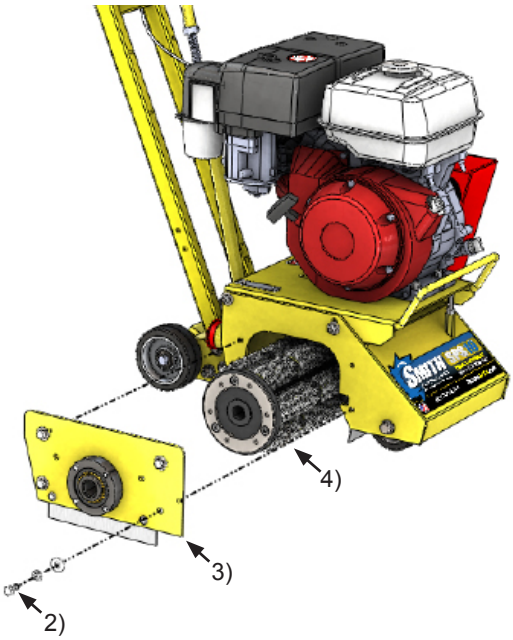

5. Once the cutter drum is removed take to a workbench for assembly.

a) Inspect condition of cutters, spacers, shafts, bushings and drum.

6) Before replacing the drum onto hex shaft:

a) Check that all bearings are in good working order

b) Remove dirt and material build-up from inside drive carriage and drum.

c) Lube all metal contacts

7) Align and slide drum back onto the hex shaft.

8) Replace side plate (lift-up and lock into place) over hex shaft and secure hardware.

***TIP: To reduce downtime, stock a machine wear parts kit with spare cutter drum assembly**

BELT REPLACEMENT

Normal wear may necessitate belt tensioning or replacement.
Time of replacement will vary according to usage and belt load factors.

Replacement is easy and requires a few hand tools.
1. Two 9/16” wrenches
2. 3/4” wrench
3. 3/8” open-end wrench
4. Carpenters square or a straightedge
5. WD40
6. Spark plug wrench

Before beginning servicing on any gasoline-powered unit, DISCONNECT SPARK PLUG WIRE!

1. Make sure the removable side cover is installed. This ensures the drive ends are in the proper position for servicing.

2. Remove the spark plug.

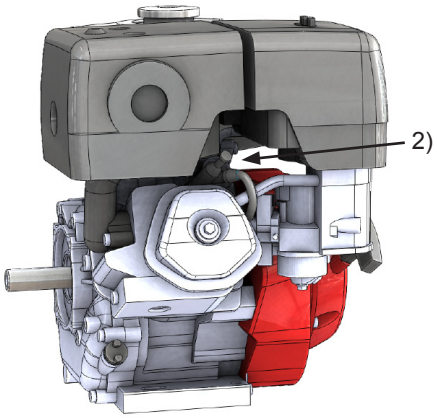

3. Clean the machine exterior so you can locate all the appropriate parts.

4. Using a 3/4” wrench, remove the two acorn nuts attaching the belt cover to the side of the machine. Remove the cover and set it aside.

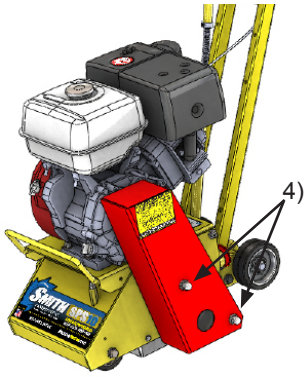

5. Lubricate the motor plate (belt tensioning) jackscrew with WD40 on the front left of the machine.

6. Use a 9/16” wrench to loosen the jack-screw jam nut.

7. Using the 3/8” open-end wrench, begin to screw the motor plate jackscrew back into the long hex nut below it. Screw it all the way until resistance is felt.

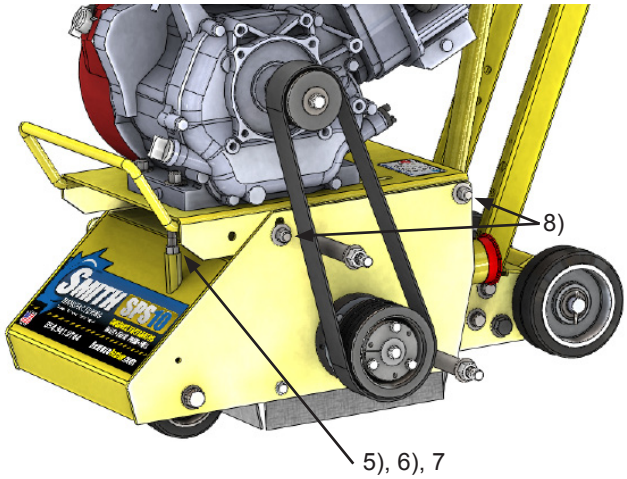

BELT REPLACEMENT (CONTINUED)

8. Loosen (do not remove) the four bolts (2 per side) that secure the motor mount plate to the main machine frame.

9. Loosen the four bolts attaching the motor to the motor plate. After sufficiently loosening all four, slide the motor back all the way to the rear. This will loosen the belt sufficiently to remove it.

10. Either cut or roll off the belt from the pulleys. If you roll it off, move it over one groove at a time on the upper and lower pulleys to completely remove it.

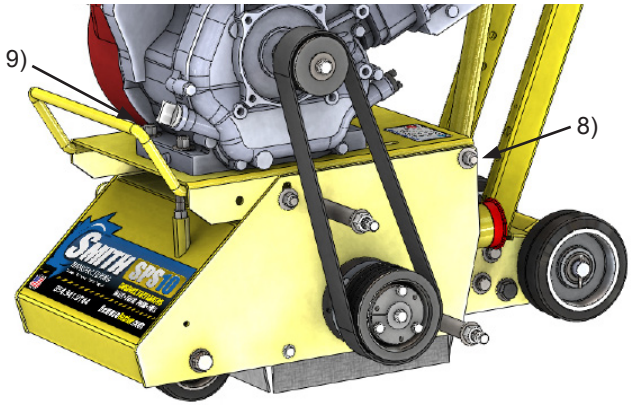

11. Roll the new belt on one groove at a time (two or single multi-groove belt) on both the top and bottom pulleys.

12. Using the straight edge, lay it across the lower pulley outer face and against the upper pulley. They must be directly over top of each other to ensure long belt life. If adjustment is required, align before tensioning the belt.

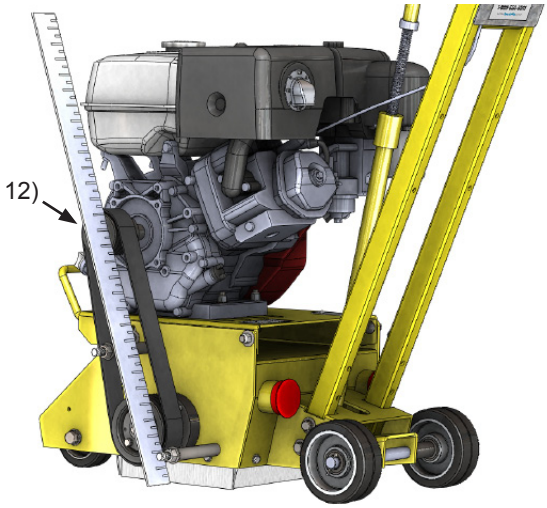

13. After installation, use the 3/8” open-end wrench to screw out the belt tensioning jackscrew under the motor plate to tension the belts to your desired tension. Do not over-tension the belt.

14. After the correct tension is reached, tighten the front motor plate securing screw on the belt side with the 9/16” box end wrench.

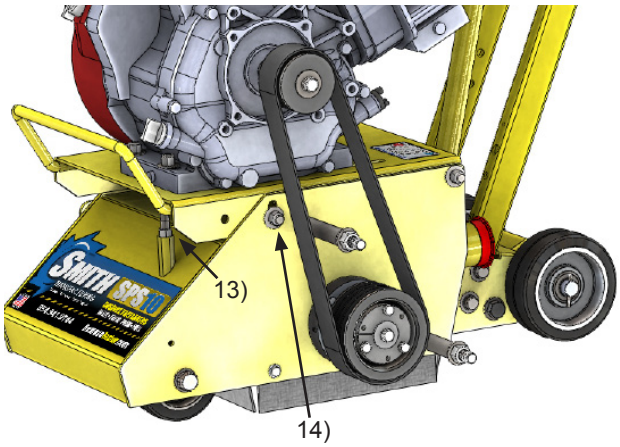

15. Now from the front of the machine observe the motor plate to machine alignment. Tightening the belts with the jackscrew tends to cause the right side of the motor plate to lift higher than the left side. By pushing down on the right front side you can level the plate and then tighten the front right screw to secure in a level position.

BELT REPLACEMENT (CONTINUED)

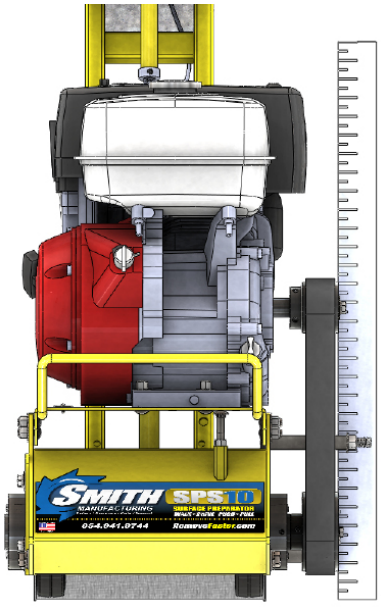

16. Now tighten the rear securing bolts with the two 9/16” wrenches.

17. Tighten the motor plate jackscrew retaining nut with a 9/16” wrench to prevent it from turning.

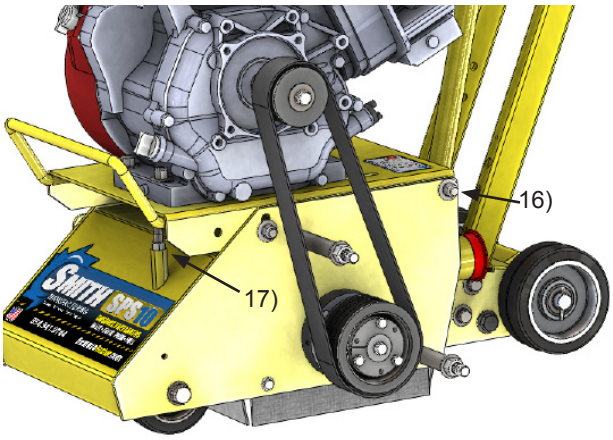

18. Replace the belt cover using the 3/4“ box wrench.

19. Replace the spark plug and the spark plug wire.

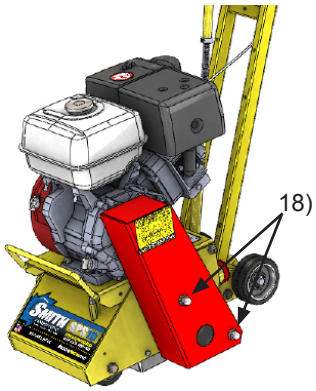

BELT ALIGNMENT

If the unit has premature belt wear, breakage or pulley problems, the issue may be incorrect alignment or excessive belt tensioning. All pulleys must be aligned directly above each other to ensure belt integrity.
This includes possible timing belts used on newer models. Incorrect alignment wears the sides of the belts excessively and will cause slippage.

1. Use a long straight edge (carpenters square) to check alignment during belt tensioning or belt replacement time.

2. By laying the straight edge against the outer face of the lower pulley, the square will extend up and rest against the outer face of the upper (engine pulley). If not, move the motor pulley in or out to obtain alignment.

3. If replacing pulleys (top or bottom) be sure to place the pulley on the same plane as the original one to ensure alignment.

BEARING REPLACEMENT

Before reading ahead go back and follow the instructions on how to remove the belt from the machine. Bearing replacement is easy and requires a few addtional hand tools.

1. 7/16” socket or wrench
2. 1/2” socket or wrench
3. 1” open-end wrench
4. 3/16” Hex Key
5. 5/32” Hex Key
6. 1/8” Hex Key

Before beginning servicing on any gasoline-powered unit, DISCONNECT SPARK PLUG WIRE!

1. Once the belt is removed from the machine, tip the machine over towards the FRONT and place the 1” wrench over the hex shaft to prevent it from rotating.

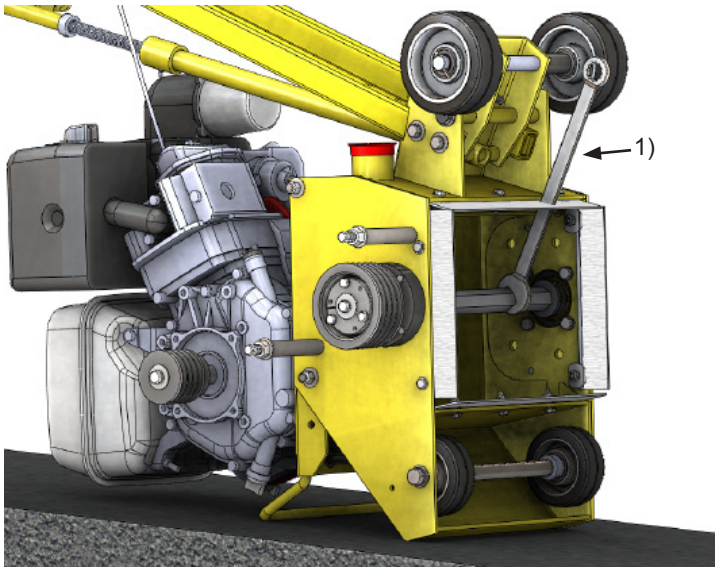

2. Remove the center screw using the 1/2” socket

3A. Remove the remaining 3 screws using the 7/16” socket and insert them by hand into the threaded holes as shown below (3B)

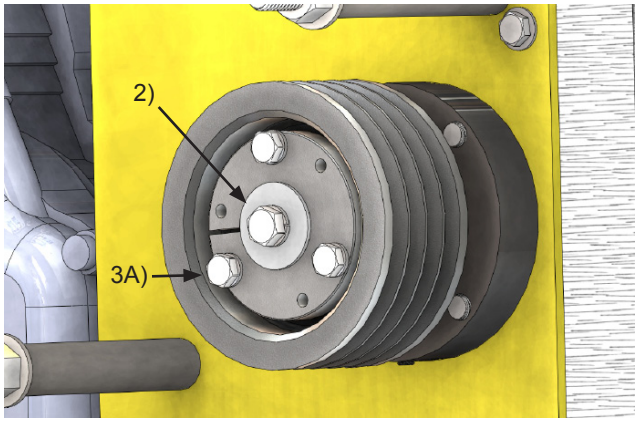

3B. Once all 3 screws are in, begin to turn them using a socket and do so EVENLY to allow the bushing to back out smoothly. Once the bushing is out, remove the pulley and key.

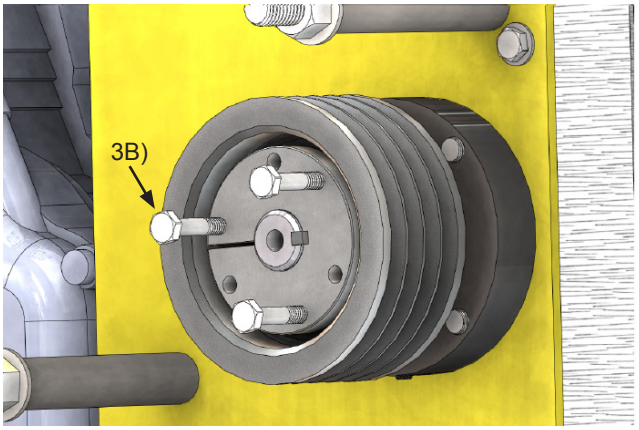

BEARING REPLACEMENT (CONTINUED)

4. Slide the shaft out by removing the 2 set screws locking it in place using the 3/16" hex key

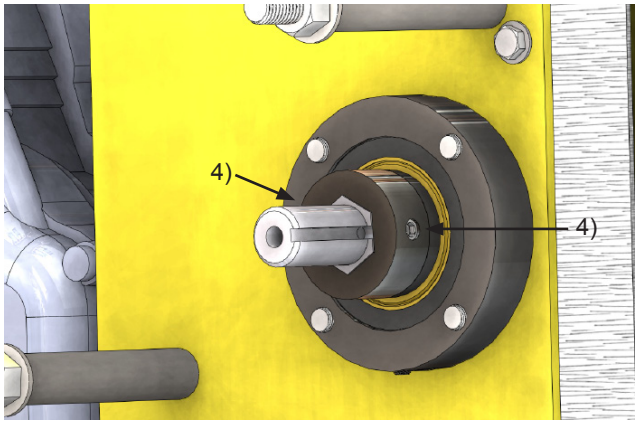

5. Remove the bearing assemblies on both sides on the machine using the 9/16" socket

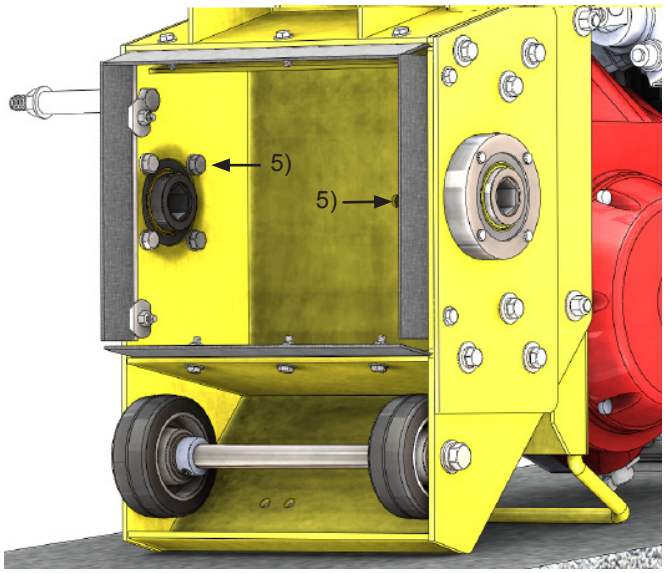

6. At this point remove the hex bushings from the bearing assemblies (note that the belt side bushing is much thicker and has holes for set screws) using the 5/32" hex key

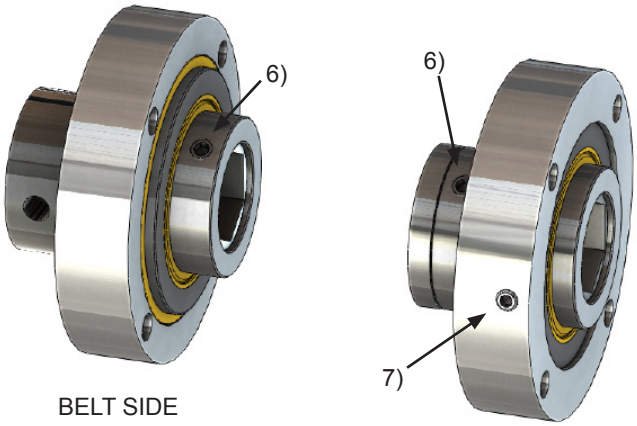

7. With the hex bushings out, the remaining bearings and housings are the same. To remove the bearing from the housing use the 1/8" hex key to remove the set screw on the housing and then tap out the bearing using a mallet

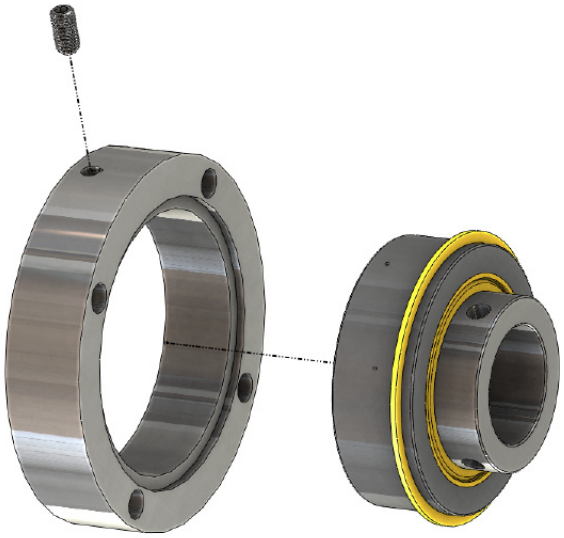

8. Reverse the process and apply thread locking fluid (loctite) to the set screws

OPTIONAL EQUIPMENT

• HIGH SPEED KIT

The high speed kit is used with the Diamond Shave-it Drum Assembly ONLY

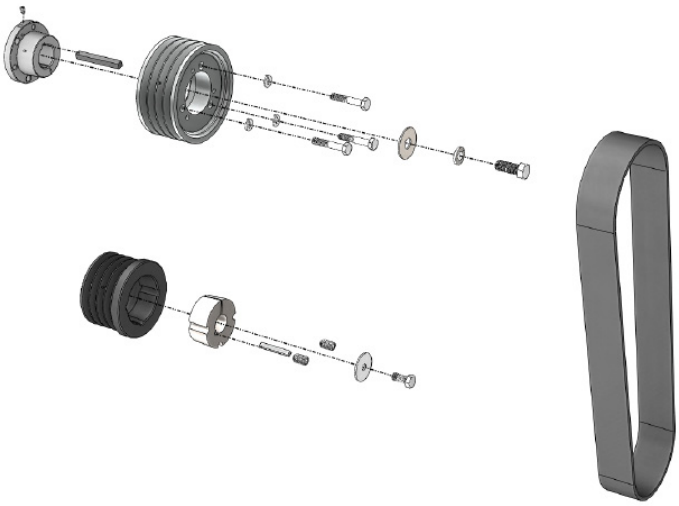

• TACH/HOUR METER

Maintenance meter for service and use control

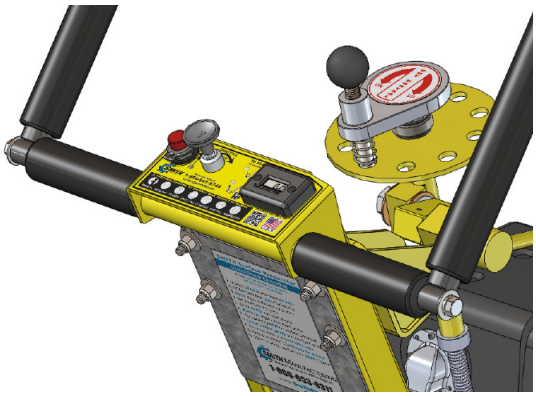

• SWIVEL WHEEL

The swivel wheel allows you to move the machine not only forward and backward in a straight line, but also from **side to side to eliminate grooves!**

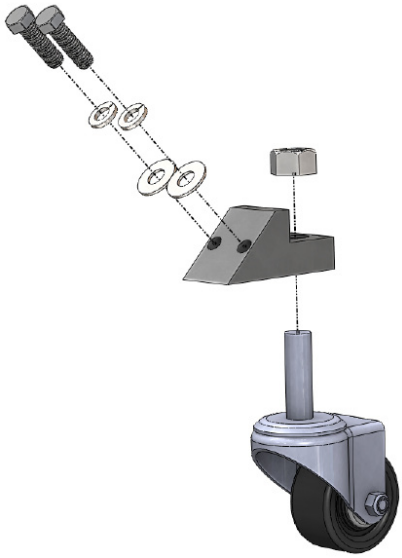

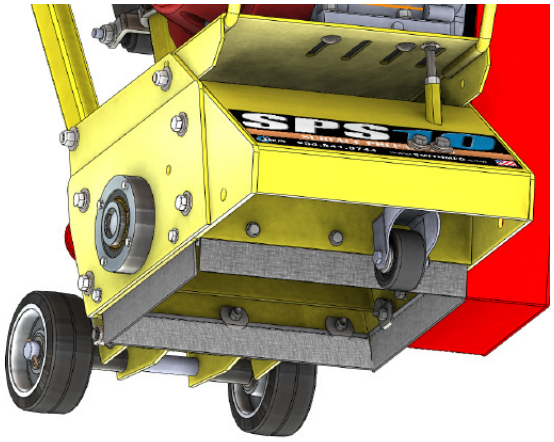

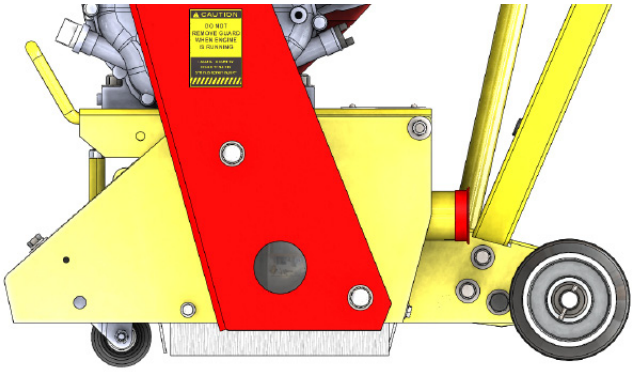

OPTIONAL EQUIPMENT

• SPS CRADLE

(Cam Release Adjustment Dampener Life Extender) shock assembly prevents hard drum drops

• CENTER STAND BRAKE KIT

The Center Stand Brake Kit allows for safe “parking” of the SPS10 on inclined surfaces

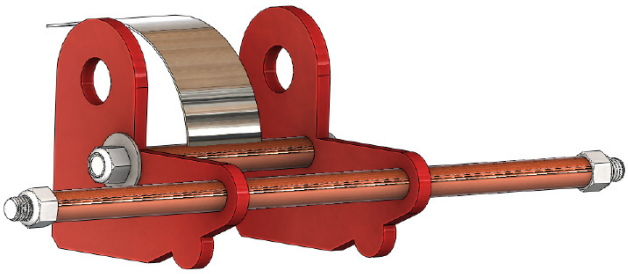

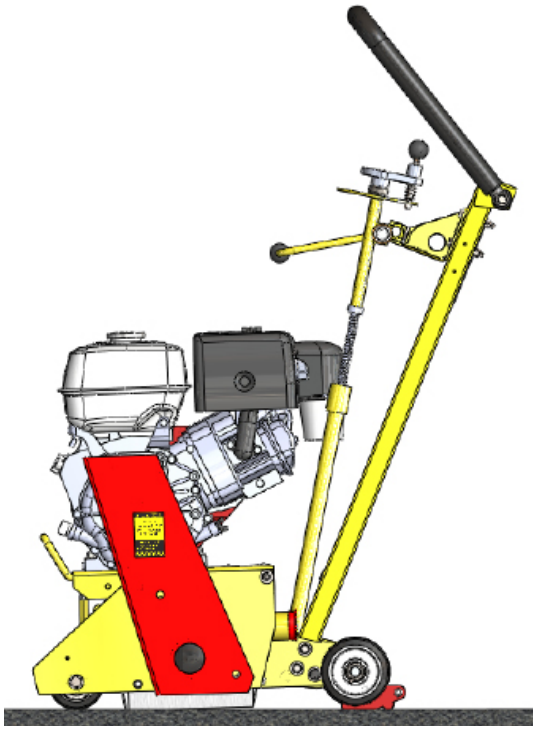

OPTIONAL EQUIPMENT

• POINTER/DIRECTIONAL SIGHT GUIDE SYSTEM

Allows operator to make straight passes easier

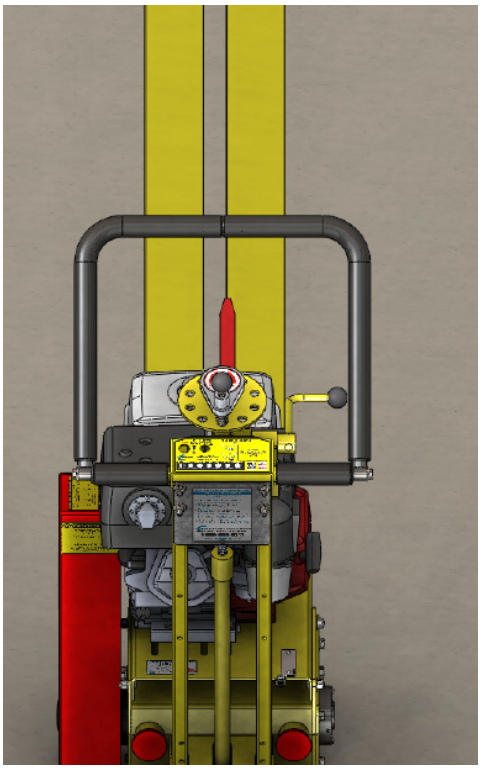

• WATER CONTROLS

Used to extend life on Diamond drum applications and for dust control on all others. Available with or without 5 gallon tank.

OPTIONAL EQUIPMENT

• BALL MOUNT HITCH

Allows attachment to other components

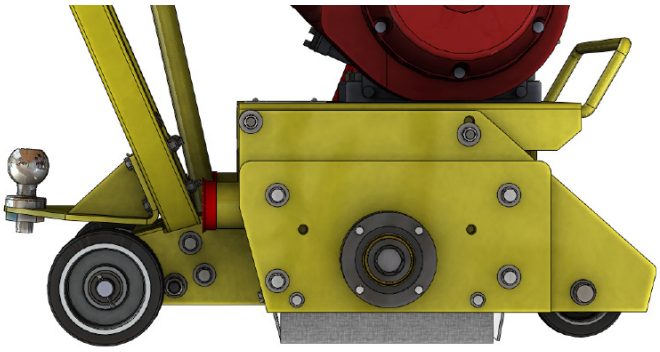

• EDGER DRUM ASSEMBLY

Available for Diamond blades and cutter applications

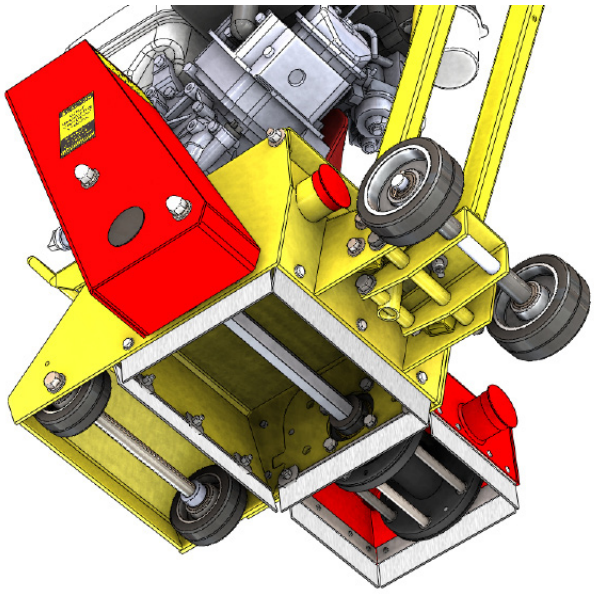

OPTIONAL EQUIPMENT

• UP-CUT CART

Increases removal speed up to 4X faster than pushing !

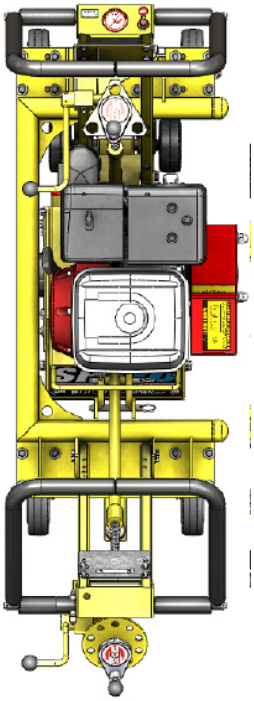

OPTIONAL EQUIPMENT

• SR-25 DRIVER

With reverse mounted rear handle control (optional upgrade - please select front or rear)

• MAXIVAC DUST COLLECTOR

Available in both gas or electric powered applications with the standard 5 micron bags or upgrade to the 1 micron filter with shake down bar

OPTIONAL EQUIPMENT

• REAR DEBRIS SKIRT

Rubber skirt to be used when working on hard packed clay courts

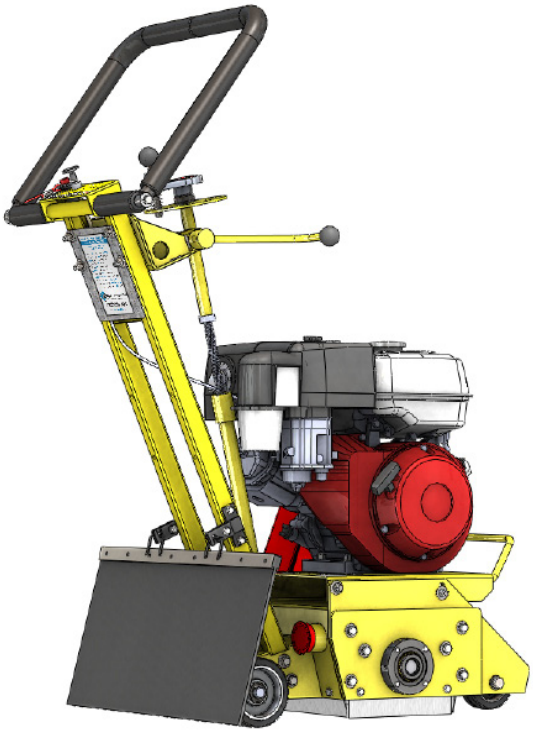

• FRONT & REAR WHEEL EXTENSION KIT

Stock

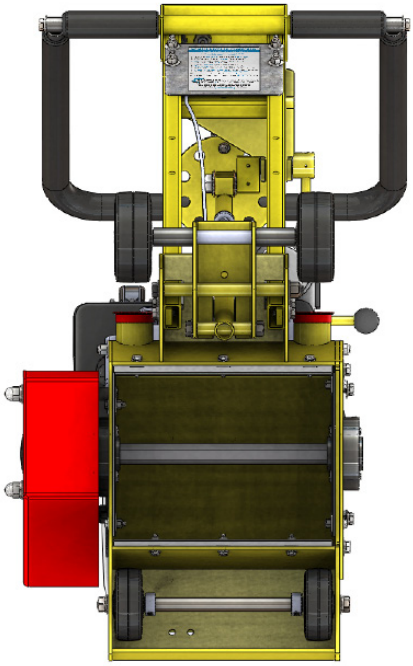

With extensions

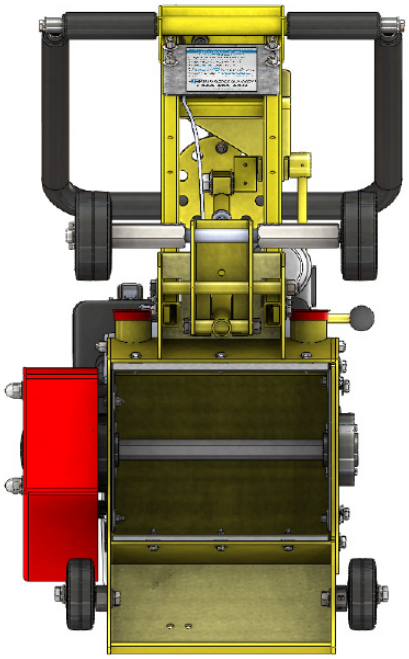

COMPLETE KIT

Fastest way to safely remove!

OPTIONAL EQUIPMENT

• DRUM OPTIONS

• FINISH IT

HS1001 - Hardened steel beam cutter

HS1008 - Hardened steel star cutter

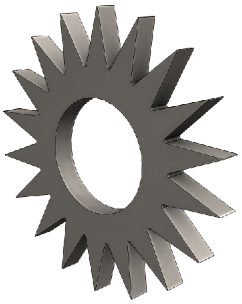

• FLAIL IT

CF2128 - 8 spike tungsten carbide pin flail cutter

CF2228 - 8 tooth tungsten carbide flail/scraper cutter

• MILL IT

CM2151 - 6 sided carbide milling cutter

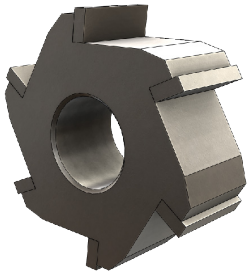

• SCRAPE IT

CM2550 - 12 edge tungsten carbide cutter

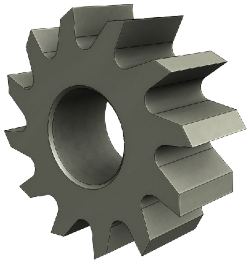

OPTIONAL EQUIPMENT

• DRUM OPTIONS CONTINUED

• CURE IT

107500 - Flared twisted steel brushes

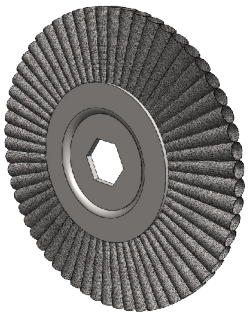

• PLANE IT

MB66-BG - Carbide planing pick

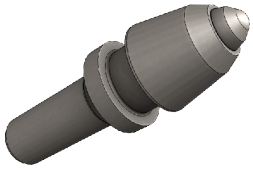

• GRIND IT

W.DB.7.25 - Diamond Blade

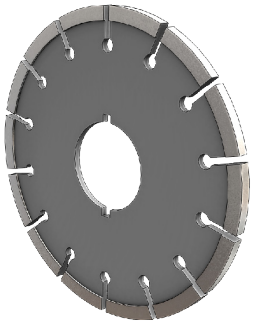

MAINTENANCE LOG

MAINTENANCE LOG

WARRANTY CLAIMS

The manufacturer reserves the right to change or improve the machine design without assuming any obligation to update any products previously manufactured before this manual. It is the customer's responsibility to complete the warranty card and mail it to the seller within 10 days from the date of purchase. If a failure occurs during the warranty period, the customer must contact the seller to determine the appropriate action. Any and all transportation charges are to be borne by the purchaser.

Limited Equipment Warranty

All statements, technical information and recommendations contained in SMITH's literature are based on tests believed to be reliable, but the accuracy or completeness thereof is not guaranteed and the following is made in lieu of all warranties, expressed or implied. SMITH warrants all equipment or part referenced in this document which is manufactured by SMITH and bearing its name to be free from defects in material and workmanship on the date of sale to the original purchaser under normal use and maintenance as herein provided. This warranty does not apply to components manufactured by others such as, but not limited to, bearings and engines; such components that may or may not have their own warranties.

With the exception of any special, extended, or limited warranty published by SMITH, SMITH will, for a period of three months (90 days) from the date of sale or up to five hundred (500) hours of use by buyer, whichever shall occur first; repair or replace any part of the equipment determined by SMITH to be defective. This warranty applies only when the equipment or part is installed, operated and maintained in accordance with SMITH's written recommendations.

SMITH's sole obligation for any breach of warranty or breach of contract for defects, deliberate or accidental omissions, shall be limited to repairing, replacing or allowing credit for, at SMITH's option, any part which, under normal and proper use and maintenance, proves defective in material or workmanship within warranty period, provided, however, that notice of any such defect or omission and satisfactory proof thereof is promptly given by buyer to SMITH, and thereafter, such defective part is returned to SMITH with transportation charges prepaid, and SMITH's examination proves such part to have been defective. This warranty does not obligate SMITH to bear any transportation charges or personnel time in connection with the replacement or repair of defective parts. This warranty does not obligate SMITH to bear any expense for travel time or of personnel in connection with any service calls. SMITH will not, in any event, be liable to the user for any consequential damages arising out of this sale for the loss of use, lost profits or revenue, interest, lost goodwill or work stoppage. SMITH shall not be liable for any injury, loss or damage, direct or consequential, arising out of the use or the inability to use the product or for environmental claims. It being understood that SMITH has no means of controlling the products final use; therefore, it shall be buyer's responsibility to determine suitability of product for intended use and buyer assumes all risks and liabilities whatsoever, in connection therewith. In no event shall SMITH be liable for consequential or special damages. Used products are sold on an "as is" basis, and there is no implied warranty of merchantability or of fitness for a particular purpose, unless made in writing by an officer at SMITH's office.

This warranty does not cover, and SMITH shall not be liable for general wear and tear, or any malfunction, damage or wear caused by faulty installation, misapplication, abrasion, corrosion, inadequate or improper maintenance, negligence, accident, tampering, or substitution of non-SMITH component parts. Nor shall SMITH be liable for malfunction, damage or wear caused by the incompatibility of SMITH equipment with structures, accessories, equipment or materials not supplied by SMITH, or the improper design, manufacture, installation, operation or maintenance of structures, accessories, equipment or materials not supplied by SMITH. This warranty does not apply in respect to damages to any product or accessory or attachment thereof caused by overloading or other misuse, neglect or accident, nor does this warranty apply to any product or accessory or attachment thereof, which has been repaired or altered in any way which, in the sole judgment of SMITH, affects the performance, stability or general purpose for which it was manufactured. In the manufacture of buyer's equipment, parts may be omitted or equivalent functioning equipment and components may be substituted for the original specified equipment upon the sole judgment and discretion of SMITH.

This warranty is conditioned upon the prepaid return of the equipment claimed to be defective to an authorized SMITH Reseller for verification of the claimed defect. If the claimed defect is verified, SMITH will repair or replace free of charge any defective parts and return of merchandise back to the customer freight collect. If inspection of the equipment does not disclose any defect in material or workmanship, repairs will be made at a reasonable charge, which charges may include the costs of parts, labor and transportation.

THIS WARRANTY IS EXCLUSIVE AND IS IN LIEU OF ANY OTHER WARRANTIES, EXPRESS OR IMPLIED, INCLUDING BUT NOT LIMITED TO WARRANTY OF MERCHANTABILITY OR WARRANTY OF FITNESS FOR A PARTICULAR PURPOSE.

SMITH's sole obligation and buyer's sole remedy for any breach of warranty shall be as set forth above. The buyer agrees that no other remedy (including, but not limited to, incidental or consequential damages for lost profits, lost sales, injury to person or property, or any other incidental or consequential loss) shall be available. Any action for breach of warranty must be brought within two (2) years of the date of sale.

SMITH MAKES NO WARRANTY, AND DISCLAIMS ALL IMPLIED WARRANTIES OF MERCHANTABILITY AND FITNESS FOR A PARTICULAR PURPOSE, IN CONNECTION WITH ACCESSORIES, EQUIPMENT, MATERIALS OR COMPONENTS SOLD BUT NOT MANUFACTURED BY SMITH.

These items sold, but not manufactured by SMITH (such as electric motors, switches, hose, etc.), are subject to the warranty, if any, of their manufacturer. SMITH will provide purchaser with reasonable assistance in making any claim for breach of these warranties. In no event will SMITH be liable for indirect, incidental, special or consequential damages resulting from SMITH supplying equipment hereunder, or the furnishing, performance, or use of any products or other goods sold hereto, whether due to a breach of contract, breach of warranty, the negligence of SMITH, or otherwise.

ADDITIONAL WARRANTY COVERAGE - SMITH does provide extended warranty and wear warranty for products.

Corrections - typographical or clerical errors contained herein are subject to correction by SMITH.

Assignment - buyer shall not assign or transfer this warranty without SMITH's written consent.

Entire agreement and applicable law - the rights and obligations of SMITH and buyer shall be governed by the laws of the state of Florida, U.S.A. In force on date hereof. The provisions hereof are intended by buyer and SMITH as a final expression of their agreement, and are intended also, as a complete and exclusive statement of all terms apply cable to buyer's order. No waiver, modification, or addition to any of the terms hereof shall be binding on SMITH, unless made in writing by an officer at SMITH's office as stated herein. In the event of conflict between buyer's purchase order and the terms hereof, the latter shall control. If any provisions herein are to any extent invalid or unenforceable, the remainder of the warranty shall not be effected thereby and shall be valid and enforceable to the fullest extent permitted by law.

Legal action - buyer shall be responsible for all costs of collection of outstanding indebtedness, including but not limited to attorney's fees and court costs to seller. Buyer shall reimburse seller for any and all litigation expenses seller incurs as a result of an unsuccessful buyer claim. The jurisdiction and venue of the court for any litigation, state or federal, brought by the buyer and/or seller shall be located in venue determined by seller.

Fair labor standards - seller's products are produced in the United States and in conformity with all applicable provisions of the fair labor standards act of 1938 as amended and any regulations and orders of the United States Department of Labor issued thereunder.

All written and visual data contained in this document reflects the most current product information available at the time of this publication. SMITH reserves the right to make changes at any time without notice.

TO ORDER, contact your SMITH distributor or call 1-800-653-9311 to identify the nearest distributor.

SMITH Manufacturing Co, Inc.
1610 South Dixie Highway
Pompano Beach, FL 33060
www.smithmfg.com

Pre-Operation Inspection - Warranty Activation - Machine Registration
Go to www.smithmfg.com/warranty_activation.php

Thank you for purchasing a SMITH. **This machine was tested and passed inspection prior to shipping.**
Please complete this form upon receipt of your equipment and prior to use on the job. Failure to do so will void warranty.
All sections must be completed. Should you have any questions, please add to the comments section below.
Fax completed form to (954) 545-0348 or email to cutters@smithmfg.com

****Do not contact SMITH for engine/motor problems, only machine warranty issues ****

Motor/Engine Warranty Contacts: Honda: http://engines.honda.com/dealer-locator/
Subaru: http://robinamerica.com/dealerusacan.aspx
Leeson: http://www.leeson.com/leeson/servicecenter.do?invoke=viewServiceCenterLocator
Brook Crompton Motor: http://www.brookcromptonna.com/contact.html
Weg Motors: http://www.weg.net/us/Contact/Service-Network

Purchaser Details
Organization _____

Name _____ Title: _____

Operators: _____

Phone: _____ Email: _____

Address _____

City _____ State _____ Zip _____

SMITH Machine **SPS10 Gas** Machine Serial # _____

Date of Purchase _____ Purchased from_____

Pre-Operation Inspection (Please check all)
1. No parts or components on the machine appear damaged or lost in shipment. [ ] Yes [ ] No
2. All bolts, fasteners, hoses are in place and tightly secured, wheels are operational. [ ] Yes [ ] No
3. Grease points have been identified for future maintenance requirements and appear lubricated. [ ] Yes [ ] No
4. Cutters and Drum/Spindle Assembly are operational and secure on machine. [ ] Yes [ ] No
5. Motor has been started and in good working condition. [ ] Yes [ ] No
6. All Decals appear in place and securely attached. [ ] Yes [ ] No
7. Equipment runs and tested to assure all components are operating correctly. [ ] Yes [ ] No
8. Do you have a Wear Parts Kit with an Extra Cutter set in stock? [ ] Yes [ ] No
9. Did you join Remove Faster News for tech updates, experience sharing and special offers? [ ] Yes [ ] No
10. Comments: _____

_____

_____

Inspector's Signature: _____ Date: _____

Note: To prevent downtime, experienced users stock (1) machine wear parts kit with an extra cutter drum/spindle assembly & (1) cutter drum/spindle rebuild kit after receipt. Do you want to purchase and receive a special offer? [ ] Yes [ ] No

SMITH Manufacturing
1610 South Dixie Highway
Pompano Beach, FL 33060

Toll Free: 800.653.9311
Phone: 954.941.9744
Fax: 954.545.0348

Email: info@SmithMfg.com
www.SmithMfg.com