FS351SP Propane

Heavy duty self propelled remover

User Manual

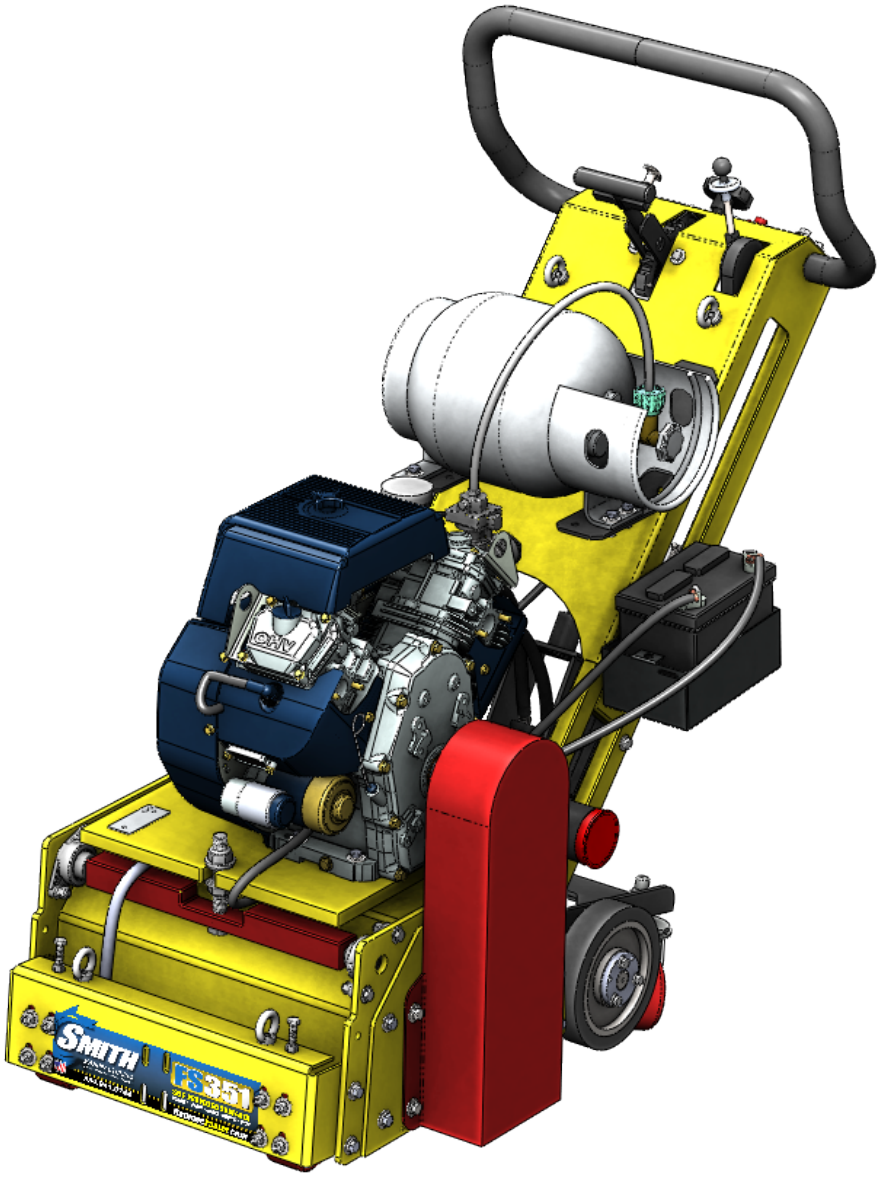

SMITH MANUFACTURING
Cutters / Removers / Parts / Support

1-800-653-9311

www.SmithMfg.com

Phone: 954-941-9744 • Fax: 954-545-0348

CONTENTS

Page	Contents
2	Index / Introduction
3	Safety Guidelines
4	Your FS351SP Surface Preparator
5	Handle Adjustment Instructions
6	Machine Start-Up
7	Substrate Removal
8	Storage, Ordering, and Warranty Claims
9	Troubleshooting
10	Maintenance Check List, Front Wheel Adjustment
11-13	Drum / Belt Replacement and Alignment
14-15	Bearing Replacement
16-17	Cutter Drum Options
18-19	Maintenance Log
20	Limited Equipment Warranty
21	Warranty Activation

UNCRATING EQUIPMENT

When you uncrate your equipment, make certain that the machine has not been damaged and that all fasteners and guards are properly tightened.

Your machine may not have been shipped assembled with cutters and other accessories. Assembly may be required.

REMEMBER: Only authorized, experienced and properly trained personnel should operate this equipment. Operating personnel should practice safety at all times and wear protective gear (gloves, goggles, safety vests, ear plugs, steel-toe shoes, etc.)

INTRODUCTION

Congratulations on purchasing the FS350™ heavy duty remover from SMITH Mfg. Company.

Your machine will:
• Clean surfaces impacted by grease, oil, plastics, tars, resins, tile adhesives, ice and more
• Plane or mill asphalt and concrete surfaces
• Remove high spots in curbs and gutters
• Eliminate trip-hazards on concrete sidewalks
• Mill areas for rumble strips
• Clean out cracks and joints
• Create anti-slip patterns in walkways and barns
• Prepare surfaces for new coating applications
• Permanently remove all road and surface coatings to include:
epoxy, urethane, thermoplastic, paint, glue-backed tapes and more...
• Groove-inlay asphalt for striping

BEFORE START-UP, READ THIS..

Please read all operating instructions, including the provided motor manual and be completely familiar with your equipment before operating. When in doubt, please contact SMITH Manufacturing Customer Service for operational details. This Owner's Manual will guide you through the removal process, from start to finish, and show you how to care for your machine.

SAFETY GUIDELINES

Incorrect use of the surface planer can result in property damage, personal injury, or death. Be sure to read and follow all directions and precautions as outlined in this manual.

• Always wear protective equipment, including ear protection and goggles.
• Never wear baggy or loose fitting clothing that can be caught on controls or moving parts.
• The surface preparator can emit flying particles and debris during operation. Never operate the machine near bystanders, animals or children.
• Check fluid levels and get acquainted with the controls.
• Do not operate the machine in an explosive atmosphere, near combustible materials, or when gas fumes may not be properly dispersed.
• Never leave the machine unattended when running, and you must hold onto the handle with two hands when the cutter drum is engaged.
• Ensure that all guards are in place before the machine is operated, since rotating and moving parts will cause injury upon contact.

• **Always make sure that main fuel valve is turned OFF when storing machine.**

HAZARDOUS DUST WARNING

DUST RESULTING FROM USE OF THIS MACHINE AND CUTTER TOOLS MAY INCLUDE CHEMICALS PROVEN TO CAUSE CANCER, BIRTH DEFECTS, AND REPRODUCTIVE CONTRAINDICATIONS, INCLUDING LEAD FROM SOME PAINTS AND SILICA FROM CONCRETE AND MASONRY. ALWAYS OPERATE THIS MACHINE IN A WELL-VENTILATED AREA WITH A HEPA FILTER DUST CONTAINMENT VACUUM SYSTEM. OPERATORS SHOULD ALWAYS WEAR PROPER SAFETY EQUIPMENT, INCLUDING AN APPROVED RESPIRATOR TO FILTER OUT FINE DUST PARTICLES. ALL EPA AND OSHA GUIDELINES REGARDING AIRBORNE DUST SHOULD BE FOLLOWED WHEN OPERATING THIS MACHINE.

YOUR FS351SP™ SURFACE PREPARATOR

Please take time to familiarize yourself with the FS351SP™'s controls, as well as some of the features of your new machine.

Read the engine manual before preparing the engine for starting.

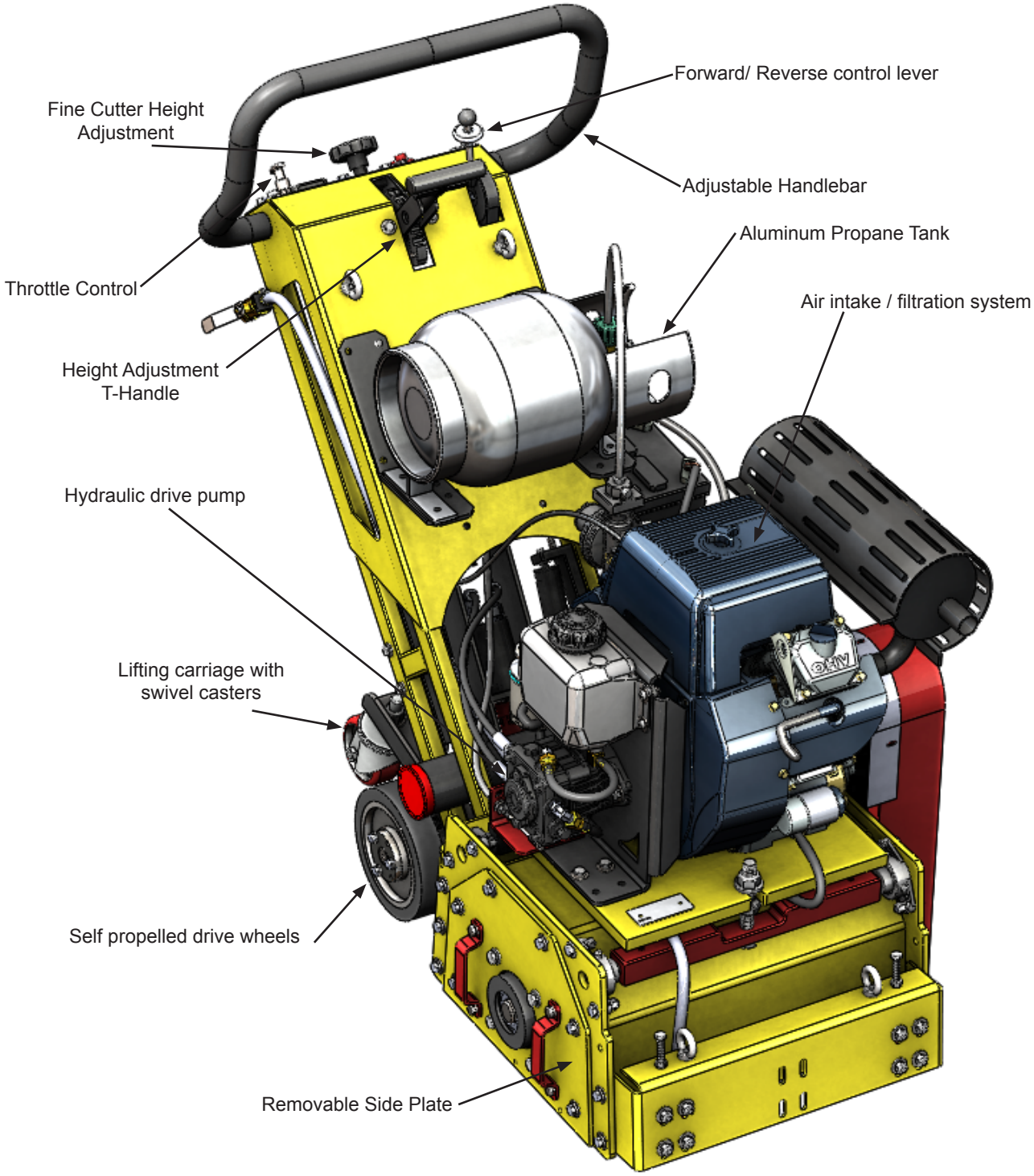

HANDLE BAR ADJUSTMENT

The handlebars are equipped with a high-density vibration suppression material to minimize operator fatigue and increase comfort level when operating equipment. To adjust the handlebars to a new position for different height operators please follow these steps:

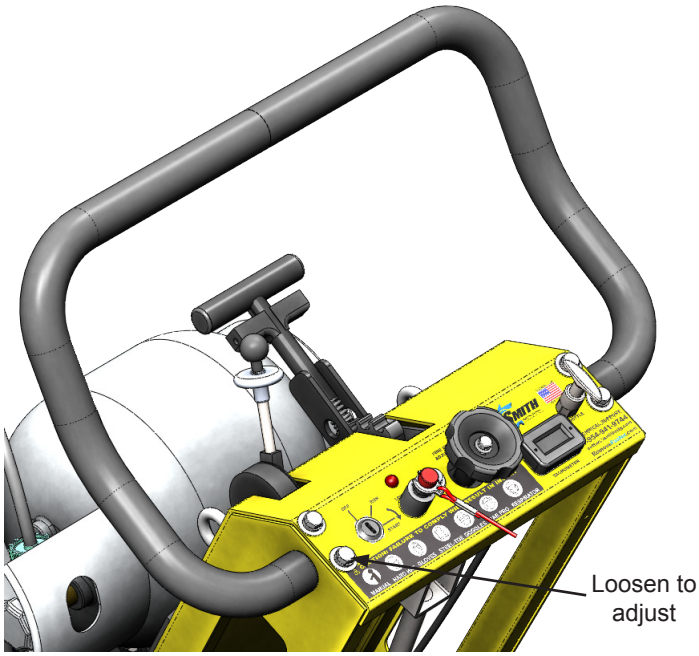

- Using a wrench or socket (9/16”), loosen the bolts on both sides of the handlebars two to three turns only.
- Adjust handlebar to desired position and re-tighten the 4 screws

Never operate with handlebars loose. The bolts must be fastened tightly assuring the handle is locked into position.

HYDROSTATIC OPERATION

Engine must be warmed up and at RUN SPEED.

RUN SPEED for Diamond Cutters is wide open (3200 rpm) .
The Max RUN SPEED for Drums is 1100 rpm (lower may be used).

Check to ensure the hydrostatic drive system is in neutral. The control lever should be in the middle position and the wheels should not be turning. Lower the unit by moving the Cutter Height Adjustment T-Handle into position. This will raise the carriage wheels off the ground and set the unit onto the drive wheels. At this point the unit can be propelled forward or in reverse by moving the drive lever either forward or backward. The Fine-Adjustment Knob may be used to make small corrections in height. The “live” axle will tend to move the unit in a straight line, however both hands are required on the handle for safe operation and minor directional corrections. For more aggressive directional changes or repositioning requirements, simply reengage the lift carriage by using the Height Adjustment T-Handle.

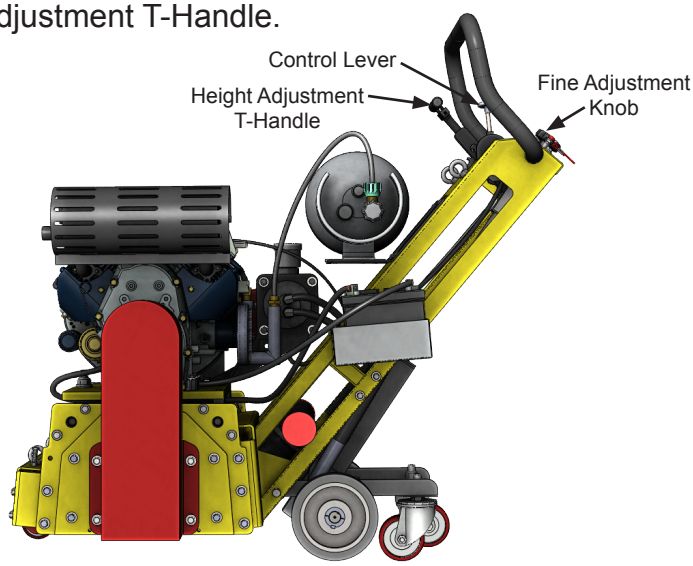

MACHINE START-UP

Do not start machine while drum is in contact with the ground. Doing so can cause the operator to lose control of the machine, resulting in property damage and/or personal injury.

NOTE: Do not attempt to raise or lower the cam lever by force. If it does not move effortlessly, raise or lower the hand wheel until the cam lever can be adjusted. Open the propane tank supply, then lock the throttle lever at the “Fast Idle” position. Start the engine, then, move throttle control to open or run position when engine is warmed up. Increase throttle to maximum operating position (approx. 2800RPM) and close choke. Before substrate removal, test run the drum with cutters not touching the surface. If there is excessive vibration, you need to re-balance the cutter set-up, check bearing condition, and/or make sure that the drive shaft is secured.

Corded “Engine Kill” Button: In the event of a malfunction or an accident (such as the machine operator falling or losing footing), the FS351SP is equipped with a corded “Engine Kill” Button. Attach the end of the cord to the operator’s belt or wrist, and snap the clip into place on the stop switch by raising the top of the Engine Kill Button and inserting the clip into the gap. If the operator becomes distanced too far from the machine, the cord will detach from the stop switch, and the machine will stop running.

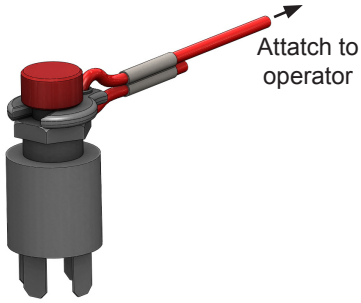

***NOTE: the Engine will not start without the Corded Engine Kill’s clip securely in place.**

CAUTION: The machine will still move with the engine off.

IF THE ENGINE DOES NOT START

1) Check Engine for proper fuel and oil levels (refer to Engine manual)
2) Check spark plug. Make sure the socket areas are clean and clear of debris, and that the proper gap is set. (Replace if needed).
3) Turn the On/Off switch, on the Control Panel, to “On”.
4) Check Corded Engine Kill Button’s Connections:
   a) Make sure the Corded Safety Stop “C” Connector is clipped properly.
   b) Try switching the connection to the opposite post (From letter “C” to letter “M”, for example).

***Engine repair and engine warranty issues are handled directly by your local engine service center.**

SUBSTRATE REMOVAL

Adjust the height of the cutter drum with the Hand Wheel and T-Handle. (Turn the hand wheel to raise the cutter drum off of the substrate. Lower or raise the T-Handle to engage or disengage the drum after setting the proper cutter depth.)

Set the depth of cut to allow the cutters to go through only the materials to be removed. Make certain that the drum is positioned to where only the cutters strike the surface, and that the drum assembly never comes into contact with the substrate. **The cutter tips alone should strike the surface** (1/8" to 1/4" maximum depth per removal pass on new cutters).

The drum will not withstand substrate contact. **Contacting the removal surface too deeply will cause premature wear to cutters, shafts, drum and other components!**

Too much downward pressure only has negative results. Try to remove materials in several passes rather than one, deep pass. Several tests will show the best, most appropriate cutter impact. Use a forward, backward and/or circular pattern to achieve your desired finish.

NOTE: Only use a forward motion when the CM2150 or CM2550 carbide milling cutters are used.

TIP: Positioning the machine over the surface in many directions, as well as dialing the hand wheel up or down can help create desirable surface patterns.
After several hours of practice, the operator will become comfortable and should be able to remove materials faster with enhanced results.

When the job is completed, or the operator wants to cease work, stop the engine by first lifting the drum above the substrate using the hand-wheel and/or the T-Handle. Stop the machine only at the engine. Then close the Propane Supply Valve on the tank to shut off the fuel supply.

The drum assembly must be removed daily and inspected for drum wear, hole elongation and possible weld separation. Replace the cutter shafts every 40 hours, or prior to any drum wear. If the drum's center holes are elongated, order another SMITH cutter drum.

STORAGE

Shut off the main valve on the tank and disconnect the gas line.

Always make sure that main fuel valve is turned OFF when storing machine.

ORDERING

To ensure product safety and reliability, and to maintain your warranty, always use genuine replacement cutters and parts from SMITH when making repairs to equipment.

When ordering please specify the model and serial number of the machine. In addition, give a part number, description, and quantity as listed on your parts list.

If you have any questions about the operation of your machine or would like to order replacement parts, contact your SMITH Manufacturing representative directly.
Contact 1-800-653-9311 (954-941-9744) for information.
Visit our website at
www.smithmfg.com

WARRANTY CLAIMS

The manufacturer reserves the right to change or improve the machine design without assuming any obligation to update any products previously manufactured before this manual. It is the customer's responibility to complete the warranty card and mail it to the seller within 10 days from date of purchase. If a failure occurs during the warranty period, the customer must contact the seller to determine the appropriate action.
Any and all transportation charges are to be borne by the purchaser.

TROUBLESHOOTING

PROBLEM

- **Possible Reason(s)/Solution(s)**

CUTTERS WEARING UNEVENLY/PREMATURELY

- **Drum is too low**
- **Incorrect set-up**
- **Material Build-up**
- **Cutters too tightly loaded**
- **Wrong cutters for application**

CUTTERS SHAFT BREAKAGE UNEVENLY/PREMATURELY

- **Drum is too low**
- **End plates or bushings worn**
- **Shafts worn**
- **Wrong cutter set-up**
- **Over 40 hours service-life**

DRUM WEARING PREMATURELY OR CRACKING

- **Drum hitting ground**
- **Shafts and bushings not replaced within 40 hours**

EXCESS VIBRATION

- **Bearing worn**
- **Hex bushing worn**
- **Drive shaft worn**
- **Improper cutter set-up**
- **Drum contacting ground**
- **Wheels worn out**

MACHINE JUMPS ERRATICALLY

- **Drum hitting ground**
- **RPM is too low**
- **Surface is severely uneven**

DRIVE BELT WEARING PREMATURELY

- **Pulley is misaligned**
- **Wrong belt**
- **Drum is contacting the surface**

MACHINE WONT MOVE IN FORWARD OR REVERSE

- **Check hydraulic reservoir level**
- **Verify v-belt to hydraulic pump is not slipping or damaged**
- **Check lifting carriage is in upright position and drive wheels in contact with ground**

For any other problems or questions,
please contact your local representative
or
SMITH Mfg today at 800-653-9311
or
(954) 941-9744.

***Engine repair and engine warranty issues are handled directly by your local engine service center.**

MAINTENANCE CHECK LIST

Note: Make sure the ignition is in the **OFF** position, and spark plugs are disconnected before servicing

• Maintain proper engine oil and crankcase levels.
Change every 25-50 hours
(see Subaru manual).

• Clean spark plugs regularly, and set the proper gap.

• Wash the air cleaner element in a non oil-based solvent, then squeeze out residue. Allow filter to dry before reinstalling in cleaner.

• Keep a coating of grease on the drive shaft and threads for easy installation or removal, and for longer hex bushing life.

• Check all fasteners and re-tighten, since the machine will vibrate the fasteners loose if they are not secured. Use locktight.

• Check the Drive and Hydraulic belts for wear, and adjust (tension), or replace as required. After replacing belts, check for proper tension:

• Check that the pulleys are aligned properly to ensure the Drive and Hydraulic belts are running true.

• The inside housing must be clean, and remove any build-up from inside the cage so cutters and drum rotate freely.

• Inspect and change drum bushings and shafts every 40 hours, or when worn.

• Ensure Hydraulic fluid level reservoir is filled to the proper level and inspect fittings for leaks. Tighten as necessary.

The hydraulic fluid for the hydraulic drive pump should be chemically stable and incorporate rust and oxidation inhibitors.

Specific fluid type meeting these requirements:
* **Non-Detergent SAE 20W-20 Motor Oil**

Note: If the natural color of the fluid has become black or milky, it is possible that an overheating or water contamination problem exists. For accurate level readings, take readings when fluid is cold.

FRONT WHEEL ADJUSTMENT

The front wheels can be adjusted independently.

1. loosen, but don't remove the 4 nuts holding the wheel to be adjusted

2. Adjust wheel height as needed using height adjustment bolt.

3. Tighten all nuts to secure wheel into position.

DRUM REPLACEMENT

Drum replacement is easy and requires a few hand tools.
1. 9/16” socket or wrench
2. Rubber mallet

Before beginning servicing on any propane-powered unit, DISCONNECT SPARK PLUG WIRES!

1. Lower the machine so the cutter drum is resting on the ground. Do this with the cutter height adjustment T-handle.

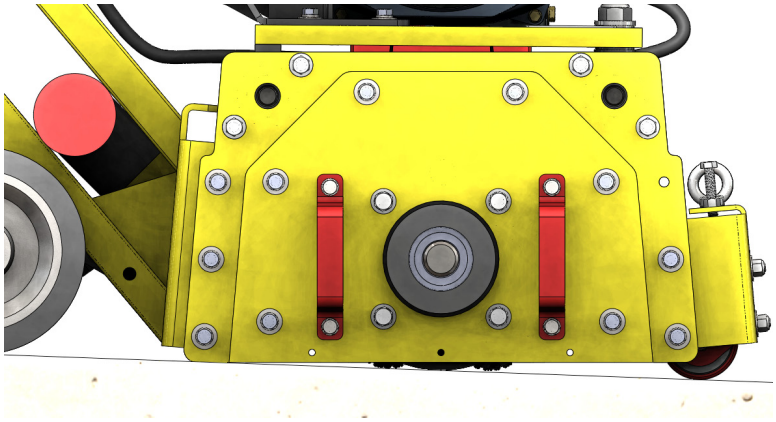

2. Remove the six hex head cap screws from the sideplate using the 9/16” socket or wrench.

3. Remove the sideplate (this may require the rubber mallet to break it loose)

4. Slide out drum assembly. (use caution as it is **HEAVY**)

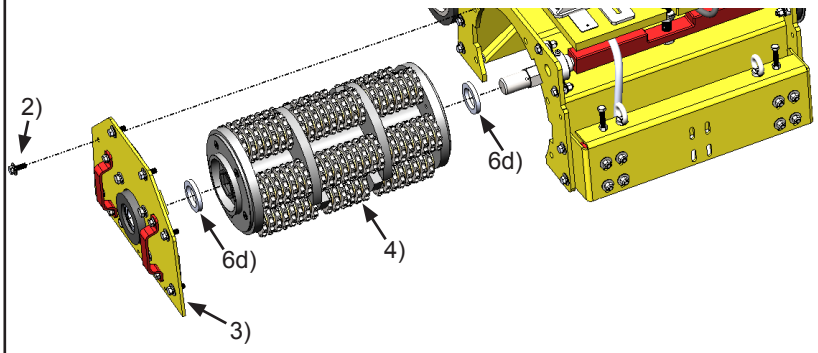

5. Once the cutter drum is removed take to a workbench for assembly.
   a) Inspect condition of cutters, spacers, shafts, bushings and drum.

6) Before replacing the drum onto hex shaft:
   a) Check that all bearings are in good working order
   b) Remove dirt and material build-up from inside drive carriage and drum.
   c) Lubricate shaft and drum bushings with synthetic dry lube.
   d) Make sure to replace drum spacers and that they are properly seated.

7) Align and slide drum back onto the hex shaft.

8) Replace side plate (lift-up and lock into place) over hex shaft and secure hardware.

NOTE: It is recommended that you use a wooden board or something similar to place under the drum before lowering the machine to take the drum weight off the shaft which makes it easier to align with side plate

***TIP: SMITH recommends owning an extra drum loaded with cutters for rapid job-site work flow.**

DRUM REPLACEMENT CONT'D.

Your drum may be equipped with the newly revised drum retention design. This can be identified by the three (3) set-screws on either side of the of the drum, and the notch cut out from the Bearing Housing. To remove this type of drum, you will first need to remove the set-screws.

Before beginning servicing on any propane-powered unit, DISCONNECT SPARK PLUG WIRES!

1.) After making sure that the engine is off and either disconnecting the battery or removing the spark-plug wires, rotate the drum so that the first set-screw on the side of the drive-belt lines up with the notch in the Bearing Housing. If the drum is too difficult to rotate, you may need to loosen the drive-belt. Refer to Pg. 13 for instructions on loosening the drive-belt.

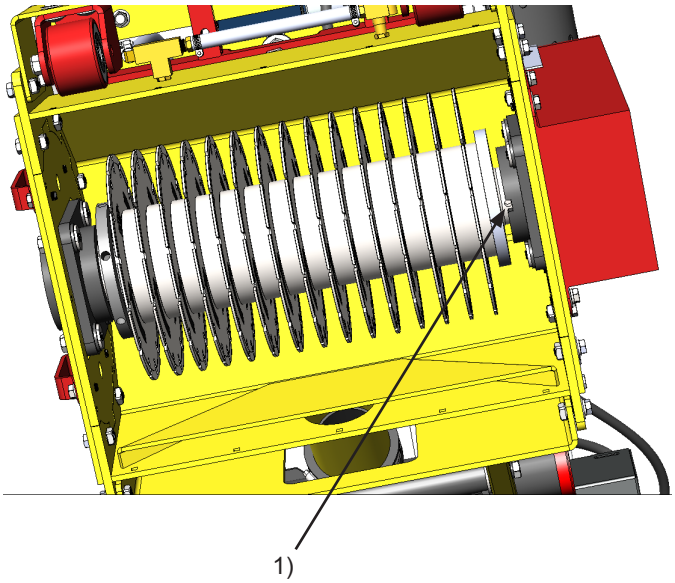

2.) Once the first set-screw is removed, rotate the drum to remove the remaining set-screws in the same way.

3.) Remove the Sideplate, as described on Pg. 11.

4.) You now have access to remove the remaining three (3) set-screws on the other side of the drum.

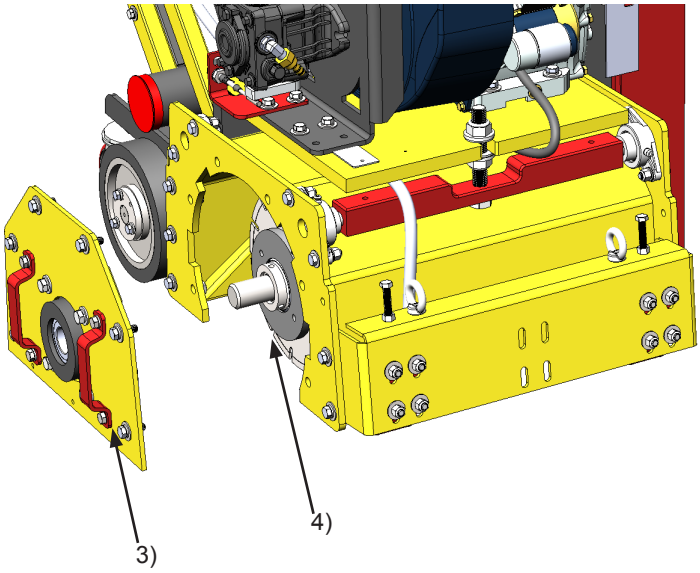

5.) Once all six (6) set-screws have been removed, you are now able to slide out and remove the drum as described on Pg. 11.

6a.) To replace the drum, slide it onto the shaft, then secure the six (6) set-screws in the same way they were removed.

6b.) Alternatively, if you are running a diamond blade drum, you may find it faster and easier to simply remove and replace the blades and spacers, while leaving the arbor in place.

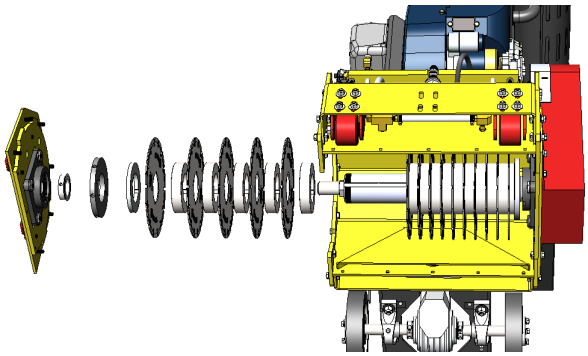

DRIVE BELT REPLACEMENT

Normal wear may necessitate belt tensioning or replacement.
Time of replacement will vary according to usage and belt load factors.

Replacement is easy and requires a few hand tools.
1. 9/16” socket or wrench
2. 1-1/16” open box wrench

Before beginning servicing on any propane-powered unit, DISCONNECT SPARK PLUG WIRES!

1. Make sure the removable side plate is installed. This insures the drive ends are in the proper position for servicing.

2. Disconnect the spark plug wires

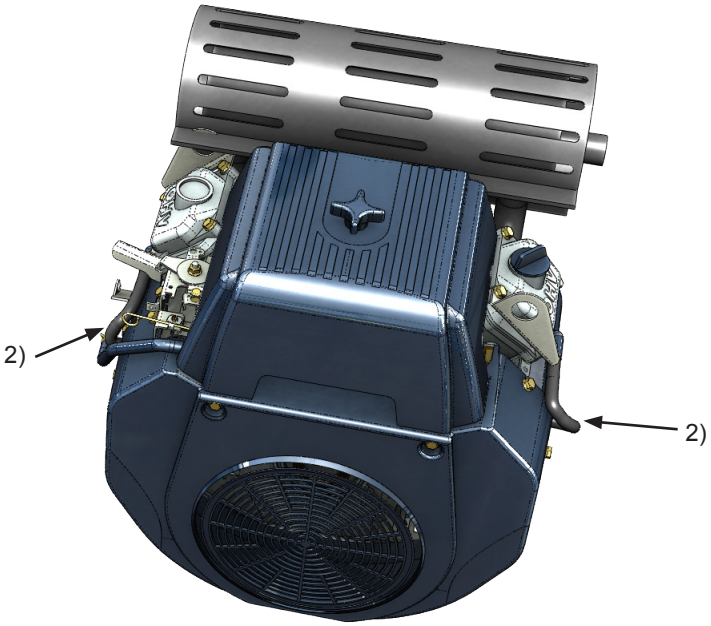

3. Clean the machine exterior so you can locate all the appropriate parts.

4. Using a 9/16” socket or wrench, remove the four hex nuts attaching the belt cover to the side of the machine. Remove the cover and set it aside.

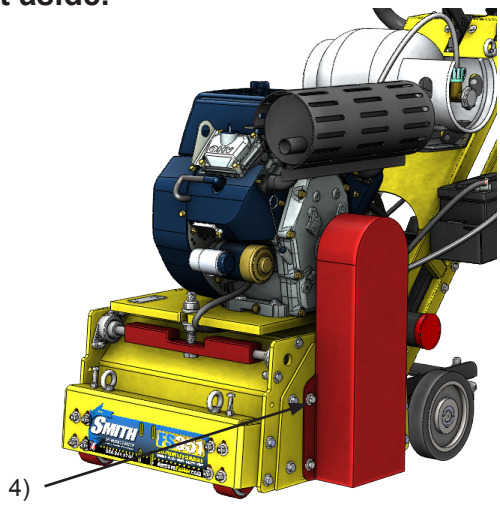

5. Turn the Base Plate Pivot Nut with a 1-1/16” socket or wrench to lower the engine base plate and loosen the drive belt.
Remove / replace the belt as needed

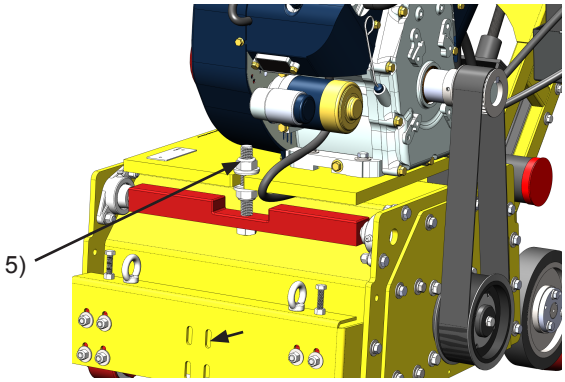

6. To tension the belt, turn the Base Plate Pivot Nut with a 1-1/16” wrench to raise the engine base plate.

DO NOT overtighten the belt as it will cause it to wear prematurely. The belt should be able to deflect 1/4” when pressing on it.

7. Put the belt cover back in place and secure the four hex nuts with a 3/8” socket or wrench.

BEARING REPLACEMENT

Before reading ahead go back and follow the instructions on how to remove the drum and drive belt from the machine. Bearing replacement is easy and requires a few addtional hand tools.

1. 17mm socket or wrench
2. 9/16” socket or wrench
3. Adjustable wrench up to 1.5”
4. 7/32” Hex Key

Before beginning servicing on any propane-powered unit, DISCONNECT SPARK PLUG WIRE!

1. With the sideplate off the machine, use a wrench to lock the rotation of the shaft. Using the 9/16” socket, remove the screw that locks down the pulley to the shaft.

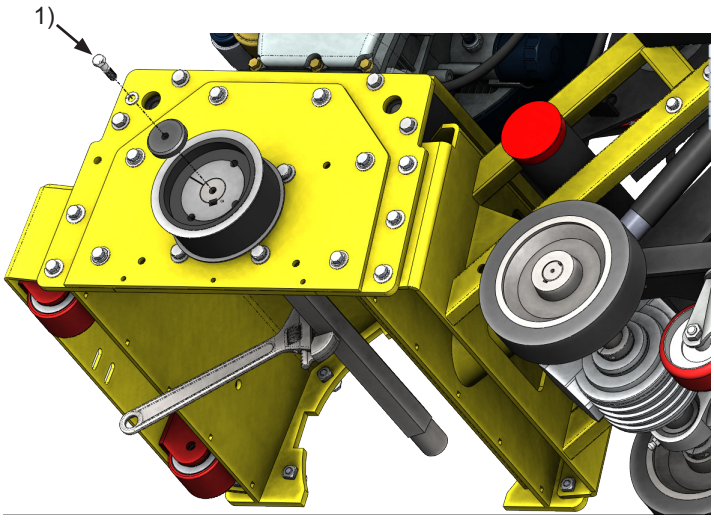

2. With the shaft rotation still locked, use a 7/32” hex key to remove the 2 set screws on the drive pulley (A). Once they are removed, insert one of them into the hole directly on top of the keyway to back out the bushing as shown below (B).

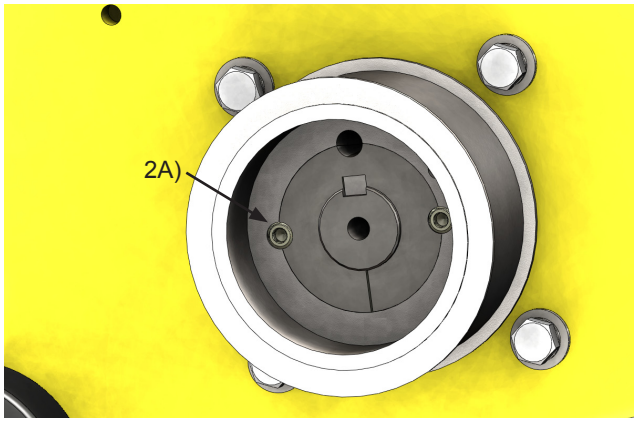

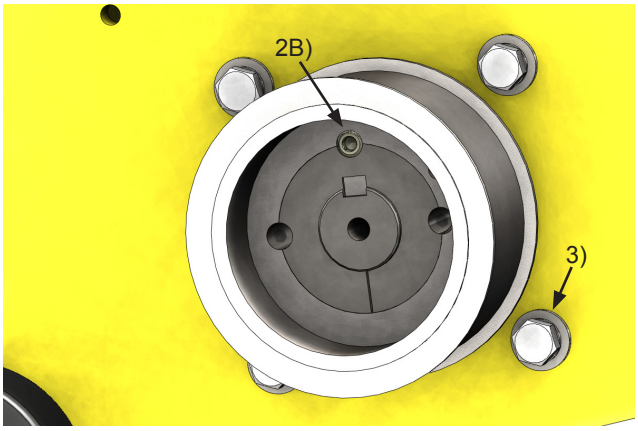

3. With the Pulley removed, use the 17mm socket or wrench to remove the bearing housing assembly from the frame and from the side plate .

4. With the bearing housing assemblies aside, they can now be taken apart to replace the bearings as needed using the circlip pliers.

BEARING REPLACEMENT (CONTINUED)

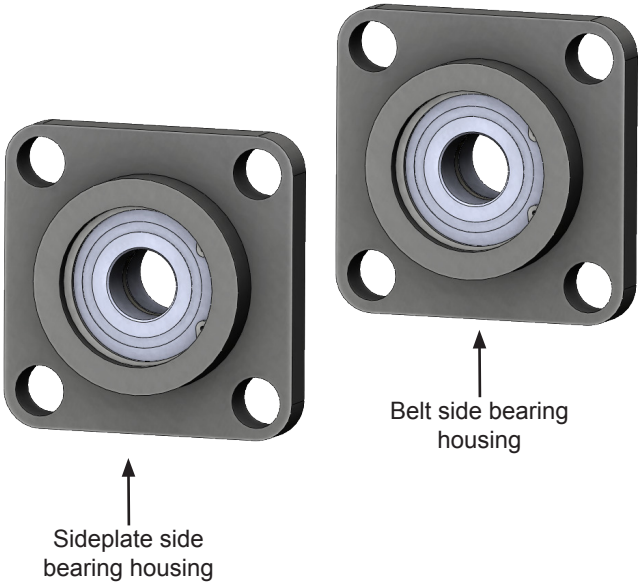

5. The bearing assembly shown below.

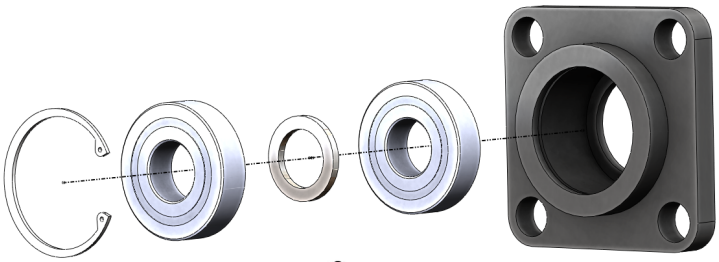

*****WARNING*****
When pressing bearings in, use a soft wooden dowel and only apply pressure to the outer race of the bearings

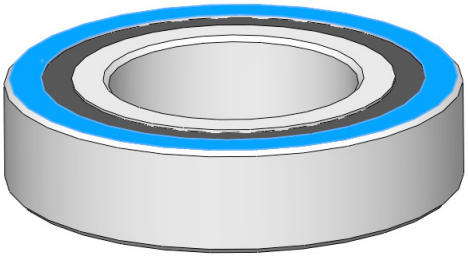

DRIVE PULLEY REPLACEMENT

The drive pulleys may be replaced to change between diamond mode and flail mode.

For flail mode, use a 28-tooth pulley on the engine shaft and a 56-tooth pulley on the drum shaft with a 1064 mm belt. The engine should be run at 2500 RPM.

For diamond mode, use a 48-tooth pulley on the engine shaft and a 48-tooth pulley on the drum shaft with a 1120 mm belt. The engine should be run at 3200 RPM.

Before attempting to change Drive Pulleys, go back and follow the instructions on how to remove and replace the Belt Cover, Drive Belt, and Drive Pulleys from the machine.

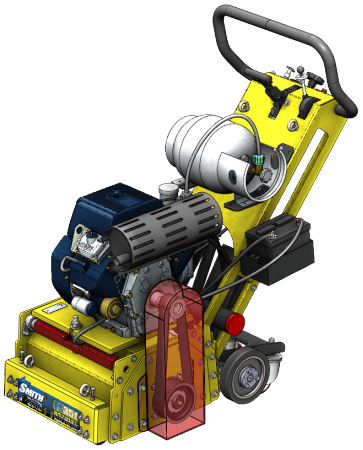

Flail Mode

Diamond Mode

CAUTION

FLAIL DRUMS MUST BE USED ON MACHINES IN FLAIL MODE ONLY.

USING FLAIL DRUMS IN DIAMOND MODE MAY RESULT IN DAMAGE TO THE MACHINE AND INJURY OR DEATH TO THE OPERATOR AND BYSTANDERS.

CUTTER DRUM OPTIONS

SMITH Cutter Drums are custom built to suit your specific needs. Below are some common examples. Be sure to contact your SMITH Sales Representative for assistance with picking the drum options that are right for your applications.

FLAIL-IT

5-Shaft Flail-It Drum
Fine Pattern
F350.15.25.3158.15F

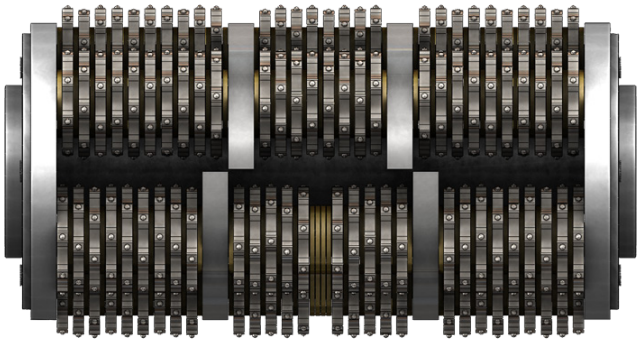

5-Shaft Flail-It Drum
Medium Pattern
F350.15.25.3158.15M

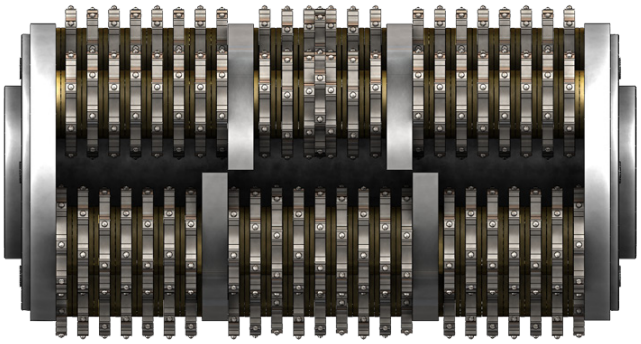

5-Shaft Flail-It Drum
Coarse Pattern
F350.15.25.3158.15C

STRIP-IT

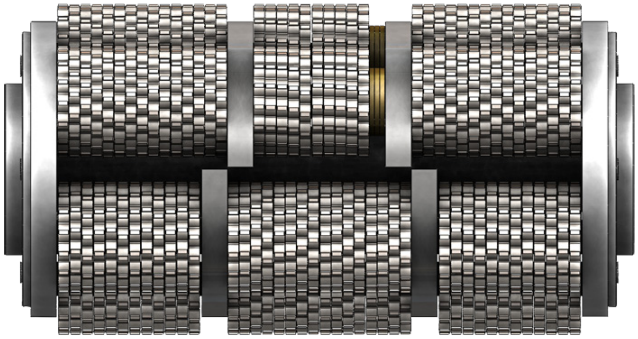

5-Shaft Strip-It Drum
Fine Pattern
F350.15.25.4116.15F

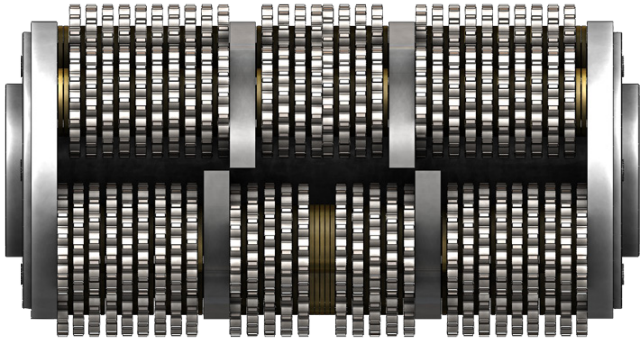

5-Shaft Strip-It Drum
Medium Pattern
F350.15.25.4116.15M

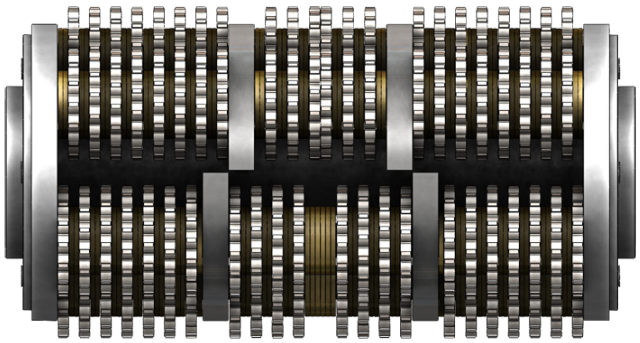

5-Shaft Strip-It Drum
Coarse Pattern
F350.15.25.411.15C

CUTTER DRUM OPTIONS

SMITH Cutter Drums are custom built to suit your specific needs. Below are some common examples. Be sure to contact your SMITH Sales Representative for assistance with picking the drum options that are right for your applications.

FINISH-IT

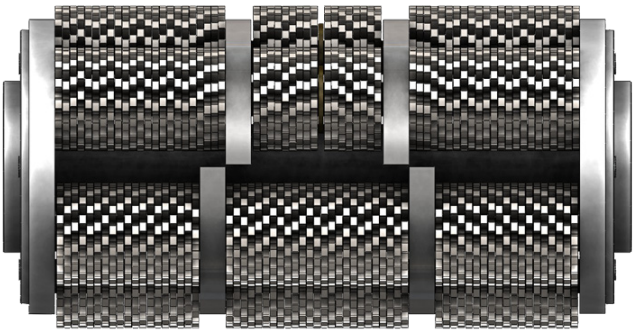

5-Shaft Finish-It Drum
Fine Pattern
F350.15.25.3001.15F

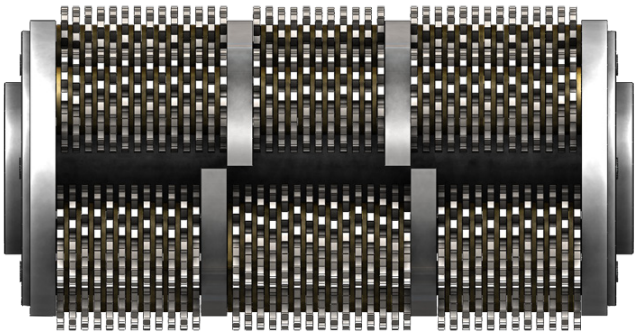

5-Shaft Finish-It Drum
Medium Pattern
F350.15.25.3001.15M

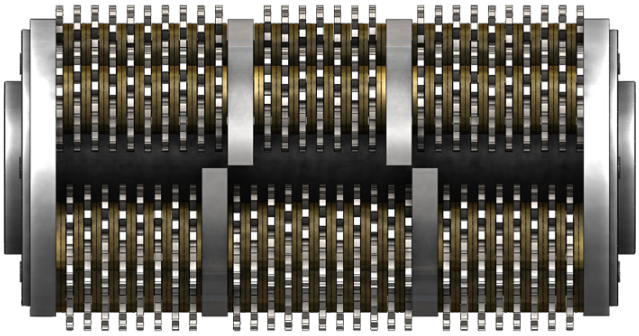

5-Shaft Finish-It Drum
Coarse Pattern
F350.15.25.3001.15C

MILL-IT

5-Shaft Mill-It Drum
Fine Pattern
F350.15.25.3137.15F

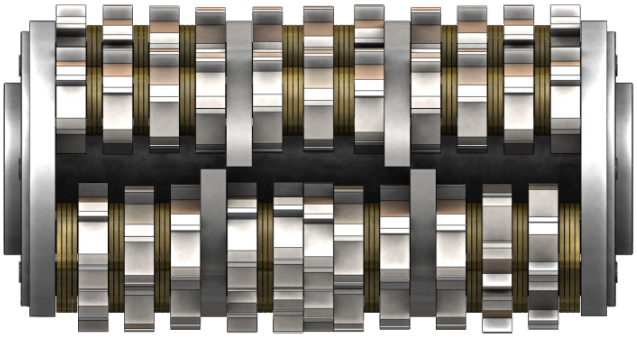

5-Shaft Mill-It Drum
Medium Pattern
F350.15.25.3136.15M

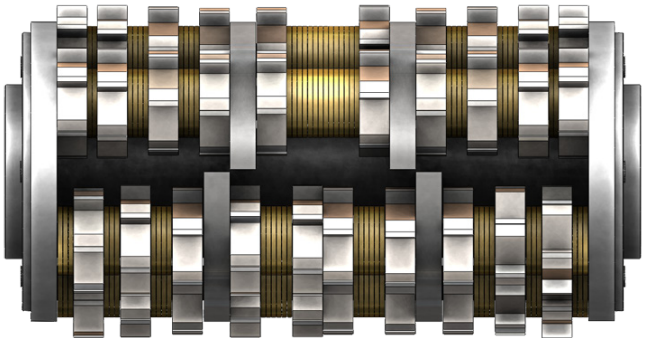

5-Shaft Mill-It Drum
Coarse Pattern
F350.15.25.3136.15C

CUTTER DRUM OPTIONS

SMITH Cutter Drums are custom built to suit your specific needs. Below are some common examples. Be sure to contact your SMITH Sales Representative for assistance with picking the drum options that are right for your applications.

PLANE-IT

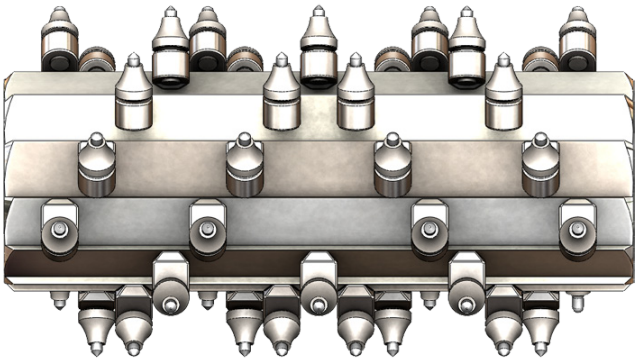

5-Shaft Plane-It Pick Drum
F350.PCK81.45GA

CURE-IT

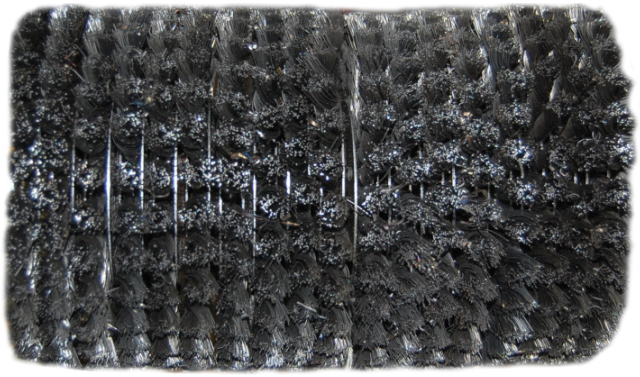

5-Shaft Cure-It Drum
FS350.10.15.C

GUARANTEE-IT

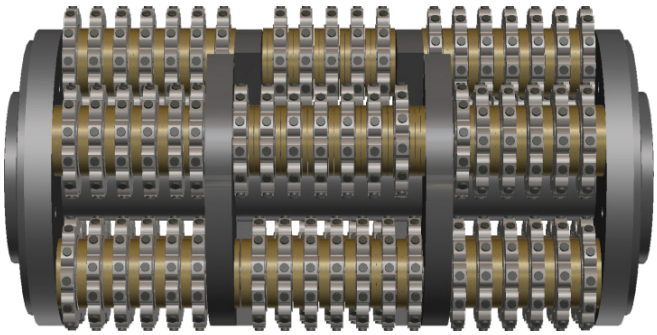

5-Shaft Guarantee-It Drum
F350.25.CF3001.15C

GROOVE-IT

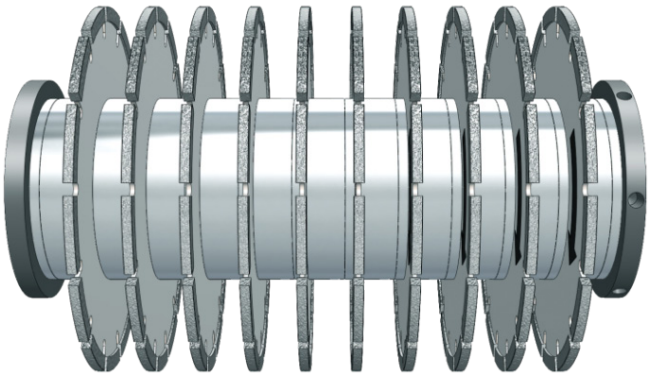

5-Shaft Groove-It Drum
W.DB.FS350.10.25.32GA

SHAVE-IT

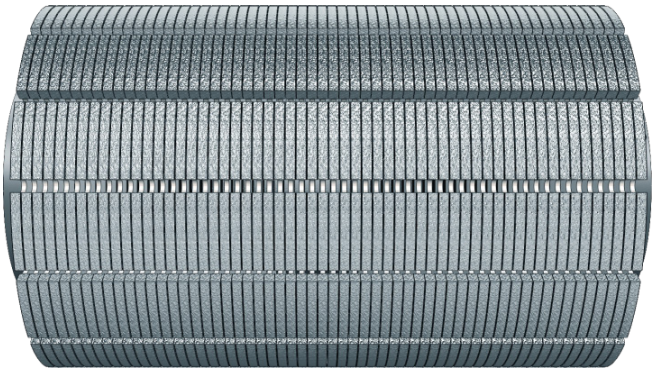

5-Shaft Shave-It Drum
W.DB.FS350.10.25.15

MAINTENANCE LOG

MAINTENANCE LOG

WARRANTY CLAIMS

The manufacturer reserves the right to change or improve the machine design without assuming any obligation to update any products previously manufactured before this manual. It is the customer's responsibility to complete the warranty card and mail it to the seller within 10 days from the date of purchase. If a failure occurs during the warranty period, the customer must contact the seller to determine the appropriate action. Any and all transportation charges are to be borne by the purchaser.

Limited Equipment Warranty

All statements, technical information and recommendations contained in SMITH's literature are based on tests believed to be reliable, but the accuracy or completeness thereof is not guaranteed and the following is made in lieu of all warranties, expressed or implied. SMITH warrants all equipment or part referenced in this document which is manufactured by SMITH and bearing its name to be free from defects in material and workmanship on the date of sale to the original purchaser under normal use and maintenance as herein provided. This warranty does not apply to components manufactured by others such as, but not limited to, bearings and engines; such components that may or may not have their own warranties.

With the exception of any special, extended, or limited warranty published by SMITH, SMITH will, for a period of three months (90 days) from the date of sale or up to five hundred (500) hours of use by buyer, whichever shall occur first; repair or replace any part of the equipment determined by SMITH to be defective. This warranty applies only when the equipment or part is installed, operated and maintained in accordance with SMITH's written recommendations.

SMITH's sole obligation for any breach of warranty or breach of contract for defects, deliberate or accidental omissions, shall be limited to repairing, replacing or allowing credit for, at SMITH's option, any part which, under normal and proper use and maintenance, proves defective in material or workmanship within warranty period, provided, however, that notice of any such defect or omission and satisfactory proof thereof is promptly given by buyer to SMITH, and thereafter, such defective part is returned to SMITH with transportation charges prepaid, and SMITH's examination proves such part to have been defective. This warranty does not obligate SMITH to bear any transportation charges or personnel time in connection with the replacement or repair of defective parts. This warranty does not obligate SMITH to bear any expense for travel time or of personnel in connection with any service calls. SMITH will not, in any event, be liable to the user for any consequential damages arising out of this sale for the loss of use, lost profits or revenue, interest, lost goodwill or work stoppage. SMITH shall not be liable for any injury, loss or damage, direct or consequential, arising out of the use or the inability to use the product or for environmental claims. It being understood that SMITH has no means of controlling the products final use; therefore, it shall be buyer's responsibility to determine suitability of product for intended use and buyer assumes all risks and liabilities whatsoever, in connection therewith. In no event shall SMITH be liable for consequential or special damages. Used products are sold on an "as is" basis, and there is no implied warranty of merchantability or of fitness for a particular purpose, unless made in writing by an officer at SMITH's office.

This warranty does not cover, and SMITH shall not be liable for general wear and tear, or any malfunction, damage or wear caused by faulty installation, misapplication, abrasion, corrosion, inadequate or improper maintenance, negligence, accident, tampering, or substitution of non-SMITH component parts. Nor shall SMITH be liable for malfunction, damage or wear caused by the incompatibility of SMITH equipment with structures, accessories, equipment or materials not supplied by SMITH, or the improper design, manufacture, installation, operation or maintenance of structures, accessories, equipment or materials not supplied by SMITH. This warranty does not apply in respect to damages to any product or accessory or attachment thereof caused by overloading or other misuse, neglect or accident, nor does this warranty apply to any product or accessory or attachment thereof, which has been repaired or altered in any way which, in the sole judgment of SMITH, affects the performance, stability or general purpose for which it was manufactured. In the manufacture of buyer's equipment, parts may be omitted or equivalent functioning equipment and components may be substituted for the original specified equipment upon the sole judgment and discretion of SMITH.

This warranty is conditioned upon the prepaid return of the equipment claimed to be defective to an authorized SMITH Reseller for verification of the claimed defect. If the claimed defect is verified, SMITH will repair or replace free of charge any defective parts and return of merchandise back to the customer freight collect. If inspection of the equipment does not disclose any defect in material or workmanship, repairs will be made at a reasonable charge, which charges may include the costs of parts, labor and transportation.

THIS WARRANTY IS EXCLUSIVE AND IS IN LIEU OF ANY OTHER WARRANTIES, EXPRESS OR IMPLIED, INCLUDING BUT NOT LIMITED TO WARRANTY OF MERCHANTABILITY OR WARRANTY OF FITNESS FOR A PARTICULAR PURPOSE.

SMITH's sole obligation and buyer's sole remedy for any breach of warranty shall be as set forth above. The buyer agrees that no other remedy (including, but not limited to, incidental or consequential damages for lost profits, lost sales, injury to person or property, or any other incidental or consequential loss) shall be available. Any action for breach of warranty must be brought within two (2) years of the date of sale.

SMITH MAKES NO WARRANTY, AND DISCLAIMS ALL IMPLIED WARRANTIES OF MERCHANTABILITY AND FITNESS FOR A PARTICULAR PURPOSE, IN CONNECTION WITH ACCESSORIES, EQUIPMENT, MATERIALS OR COMPONENTS SOLD BUT NOT MANUFACTURED BY SMITH.

These items sold, but not manufactured by SMITH (such as electric motors, switches, hose, etc.), are subject to the warranty, if any, of their manufacturer. SMITH will provide purchaser with reasonable assistance in making any claim for breach of these warranties. In no event will SMITH be liable for indirect, incidental, special or consequential damages resulting from SMITH supplying equipment hereunder, or the furnishing, performance, or use of any products or other goods sold hereto, whether due to a breach of contract, breach of warranty, the negligence of SMITH, or otherwise.

ADDITIONAL WARRANTY COVERAGE - SMITH does provide extended warranty and wear warranty for products.

Corrections - typographical or clerical errors contained herein are subject to correction by SMITH.

Assignment - buyer shall not assign or transfer this warranty without SMITH's written consent.

Entire agreement and applicable law - the rights and obligations of SMITH and buyer shall be governed by the laws of the state of Florida, U.S.A. In force on date hereof. The provisions hereof are intended by buyer and SMITH as a final expression of their agreement, and are intended also, as a complete and exclusive statement of all terms apply cable to buyer's order. No waiver, modification, or addition to any of the terms hereof shall be binding on SMITH, unless made in writing by an officer at SMITH's office as stated herein. In the event of conflict between buyer's purchase order and the terms hereof, the latter shall control. If any provisions herein are to any extent invalid or unenforceable, the remainder of the warranty shall not be effected thereby and shall be valid and enforceable to the fullest extent permitted by law.

Legal action - buyer shall be responsible for all costs of collection of outstanding indebtedness, including but not limited to attorney's fees and court costs to seller. Buyer shall reimburse seller for any and all litigation expenses seller incurs as a result of an unsuccessful buyer claim. The jurisdiction and venue of the court for any litigation, state or federal, brought by the buyer and/or seller shall be located in venue determined by seller.

Fair labor standards - seller's products are produced in the United States and in conformity with all applicable provisions of the fair labor standards act of 1938 as amended and any regulations and orders of the United States Department of Labor issued thereunder.

All written and visual data contained in this document reflects the most current product information available at the time of this publication. SMITH reserves the right to make changes at any time without notice.

TO ORDER, contact your SMITH distributor or call 1-800-653-9311 to identify the nearest distributor.

SMITH Manufacturing Co, Inc.
1610 South Dixie Highway
Pompano Beach, FL 33060
www.smithmfg.com

SMITH MANUFACTURING
Cutters / Removers / Parts / Support
1610 South Dixie Highway - Pompano Beach, FL 33060 • Ph: 954-941-9744 • Fax: 954-545-0348 • Email: info@smithmfg.com • www.SMITHMFG.com

PRE-OPERATION INSPECTION - WARRANTY ACTIVATION
PRODUCT REGISTRATION

Thank you for purchasing a SMITH. Please complete this form upon receipt of your equipment and prior to use on the job. A pre-operation inspection is required to activate your warranty. *All sections must be completed.* Should you have any questions, please add them to the comments section below. Fax the completed form to (954) 545-0348.

Organization _____

Name _____ JobTitle _____

Phone_____ Email _____

Address _____

City _____

State _____Zip _____

SMITH Product **FS351sp Propane**

Machine Serial # _____

Date of Purchase (MM / DD / YYYY) _____

Purchased from _____

PRE-OPERATION INSPECTION (PLEASE CHECK ALL)

1. No parts or components on the machine appear damaged or lost in shipment. ☐ Yes ☐ No
2. All bolts and fasteners are in place and tightly secured. ☐ Yes ☐ No
3. Grease points have been identified for future maintenance requirements and appear lubricated. ☐ Yes ☐ No
4. Wheels are operational. ☐ Yes ☐ No
5. Motor has been started and in good working condition. ☐ Yes ☐ No
6. All Decals appear in place and securely attached. ☐ Yes ☐ No
7. Equipment runs and tested to assure all components are operating correctly. ☐ Yes ☐ No
8. Do you have a Wear Parts Kit with an Extra Cutter set in stock? ☐ Yes ☐ No
9. Did you join Remove Faster News for tech updates, experience sharing and special offers? ☐ Yes ☐ No

Comments (add any additional or from above answers below)

_____

_____

_____

NOTE: All power equipment is warranted directly from the motor/engine manufacturers direct and not from SMITH Manufacturing. Prior to starting your equipment, please find the name of your engine/motor repair center for warranty and service:

- Honda: http://engines.honda.com/dealer-locator/
- Subaru: http://robinamerica.com/dealerusacan.aspx
- Leeson: http://www.leeson.com/leeson/servicecenter.do?invoke=viewServiceCenterLocator
- US Motors: http://www.usmotors.com/Contact-Information.aspx
- Kohler: http://www.kohlerengines.com/contact/contact.htm

IMPORTANT: Gas Engine owners: Never tip engine forward which will lock the recoil pull cord until the fuel and oil returns back into their respective fuel chambers and the carburetor is free before it can be started.

SMITH Manufacturing
1610 South Dixie Highway
Pompano Beach, FL 33060

Toll Free: 800.653.9311
Phone: 954.941.9744
Fax: 954.545.0348

Email: info@SmithMfg.com
www.SmithMfg.com